REV.

LERA LESLIE E. ROBERTSON ASSOCIATES, RLLP
CONSULTING STRUCTURAL ENGINEERS

P

DRAFT

DESIGN

CHECK

DRAWING NO.

WTC
DRAWING
BOOK
13

Box 05A

Book 13

SKILLING, HELLE, CHRISTIANSEN, ROBERTSON — Structural & Civil Engineers

PROJECT THE WORLD TRADE CENTER | TITLE DRAWING BOOK 13 - CONTENTS | DATE 11-3-72

REVISIONS

released for construction 11/20/72

2-5-73

5-7-73

BOOK	CHAPTER	CONTENT
13	K1.1	CONTENTS & DATE PAGE
	K1.2	GENERAL NOTES
	K1.3	PIPE OPENINGS IN BEAMS
	K1.4	TYPICAL STUD DETAILS
	K1.5	EXISTING BEAMS TO BE REMOVED
13	K2.1	GIRDER & COLUMN ELEVATIONS
	K2.2	COLUMN BASE DETAILS
	K2.3	TYPICAL GIRDER DETAILS
	K2.4	GIRDER COLUMN DETAILS
	K2.5	GIRDER FUTURE COLUMN DETS.
13	K3.1	GIRDER ELEVATIONS
	K3.2	TYPICAL GIRDER DETAILS
	K3.3	GIRDER CONNECTION DETAILS
	K3.4	GIRDER DETS. AT FUTURE COLS.
	K3.5	BEAM CONNECTIONS AT GIRDERS
13	K4.1	BALLROOM GIRDER ELEVATIONS
	K4.2	BALLROOM GIRDER TYPICAL DETS.
	K4.3	BALLROOM GIRDER END CONN.
13	K5.1	CONNECTIONS AT COLUMN
	K5.2	CONNECTION AT CANTILEVER
	K5.3	CONNECTIONS AT CANOPY
	K5.4	GIRDERS AT CANOPY
	K5.5	CONNECTIONS FUTURE CANOPY
13	K6.1	SLIDE CONNECTIONS TOWER B
	K6.2	DETAILS AT STAIR
13	K7.1	BEAM CONN. AT EXISTING
	K7.2	BEAM END NOTCHES
	K7.3	BEAM NOTCHES EXISTING
13	K8.1	HANGER DETS. ABOVE MECH. PLATFORM
	K8.2	HANGER DETS MECH. PLATFORM
	K8.3	DETAILS INTERMEDIATE LEVEL
13	K9.1	BRACING 310-332 ELEVATIONS
	K9.2	BRACING 310 332 DETAILS
13	K10.1	NOTCH & NEW SUPPORT FOR EXIST. BM.
	K10.2	SECTIONS AT ESCALATOR - EL 294
	K10.3	DETAIL AT COL HS/2 - EL. 284
13	K11.1	EL. 310, ZONE K3 — CONN. DET.
	K11.2	EL. 310, ZONE K5 — CONN. DET.
	K11.3	EL. 310, ZONE K3&5 - FIRE DAMAGE - C.D.
	K11.4	EL. 310/303, ZONE K5 - MECH. - C.D.
13	K12	EL. 329 ZONE K3 & K5 PLATFORM DET.
13	K13	SECTIONS AT AUTOLIFT - EL. 284.

LICENSED PROFESSIONAL ENGINEER LESLIE E. ROBERTSON No. 34360 UNIVERSITY OF THE STATE OF NEW YORK

DESIGNED

DRAWN

REVIEWED

SKILLING, HELLE, CHRISTIANSEN, ROBERTSON — **Structural & Civil Engineers**

PROJECT: THE WORLD TRADE CENTER | TITLE: DRAWING BOOK 13 - DATE PAGE | DATE: 11/.3/72

REVISIONS
5-6-73
5-7-73
6-4-73

6/20/73

13- K1.1- 1	5/ 7/73
13- K1.1- 2	6/ 4/73
13- K1.1- 3	6/ 4/73
13- K1.2- 1	12/11/72
13- K1.3- 1	11/20/72
13- K1.3- 2	2/28/73
13- K1.4- 1	11/20/72
13- K1.5- 1	12/11/72
13- K2.1- 1	4/ 2/73
13- K2.1- 2	2/ 5/73
13- K2.1- 3	2/ 5/73
13- K2.1- 4	12/11/72
13- K2.1- 5	11/20/72
13- K2.1- 6	4/20/73
13- K2.1- 7	4/20/73
13- K2.1- 8	6/ 4/73
13- K2.1- 9	12/11/72
13- K2.1-10	4/20/73
13- K2.1-11	4/20/73
13- K2.1-12	4/20/73
13- K2.1-13	11/20/72
13- K2.1-14	12/11/72
13- K2.1-15	12/11/72
13- K2.2- 1	2/ 5/73
13- K2.2- 2	2/ 5/73
13- K2.2- 3	2/ 5/73
13- K2.2- 4	11/20/72
13- K2.2- 5	12/11/72
13- K2.3- 1	11/20/72
13- K2.3- 2	12/11/72
13- K2.3- 3	6/ 4/73
13- K2.4- 1	11/20/72
13- K2.4- 2	11/20/72
13- K2.4- 3	2/ 5/73
13- K2.4- 4	2/ 5/73
13- K2.4- 5	2/ 5/73
13- K2.4- 6	11/20/72
13- K2.4- 7	2/ 5/73
13- K2.4- 8	11/20/72
13- K2.4- 9.1	11/20/72
13- K2.4- 9.2	11/20/72
13- K2.4-10	11/20/72
13- K2.4-11	11/20/72
13- K2.4-12	11/20/72
13- K2.4-13	4/20/73
13- K2.4-14	4/20/73
13- K2.4-15	12/11/72
13- K2.4-16	4/20/73
13- K2.5- 1	11/20/72
13- K2.5- 2	11/20/72
13- K2.5- 3.1	11/20/72
13- K2.5- 3.2	11/20/72
13- K2.5- 4	[redacted]
13- K2.5- 5	[redacted]
13- K2.5- 6	4/20/73
13- K2.5- 7	11/20/72
13- K3.1- 1	11/20/72
13- K3.1- 2	12/11/72
13- K3.1- 3	12/11/72
13- K3.1- 4	11/20/72
13- K3.1- 5	12/11/72
13- K3.1- 6	6/ 4/73
13- K3.1- 7	[redacted]
13- K3.1- 8	12/11/72
13- K3.1- 9	6/ 4/73
13- K3.1-10	4/20/73
13- K3.1-11	11/20/72
13- K3.1-12	4/20/73
13- K3.2- 1	11/20/72
13- K3.3- 1	11/20/72
13- K3.3- 2	11/20/72
13- K3.3- 3	12/11/72
13- K3.3- 4	11/20/72
13- K3.3- 5	11/20/72
13- K3.3- 6	11/20/72
13- K3.3- 7	11/20/72
13- K3.3- 8	11/20/72
13- K3.3- 9	11/20/72
13- K3.3-10	11/20/72
13- K3.3-11	11/20/72
13- K3.3-12	6/ 4/73
13- K3.3-13	11/20/72
13- K3.3-14	6/ 4/73
13- K3.3-15	2/ 5/73
13- K3.3-16	11/20/72
13- K3.3-17	11/20/72
13- K3.4- 1	2/ 5/73
13- K3.4- 2	2/ 5/73
13- K3.4- 3	2/ 5/73
13- K3.4- 4	11/24/72
13- K3.4- 5.1	2/ 5/73
13- K3.4- 5.2	11/24/72
13- K3.4- 6	2/ 5/73
13- K3.4- 7	11/24/72
13- K3.4- 8	[redacted] R
13- K3.4- 9	11/24/72
13- K3.4-10	6/ 4/73
13- K3.4-11	11/24/72
13- K3.4-12.1	11/24/72
13- K3.4-12.2	6/ 4/73
13- K3.5- 1	2/ 5/73
13- K3.5- 2	11/20/72

LICENSED PROFESSIONAL ENGINEER — LESLIE E. ROBERTSON — No. 34350 — THE STATE OF NEW YORK

SKILLING, HELLE, CHRISTIANSEN, ROBERTSON — Structural & Civil Engineers

PROJECT	TITLE	DATE
THE WORLD TRADE CENTER	DRAWING BOOK 13 - DATE PAGE	11/ 3/72

REVISIONS
5-6-73
5-7-73
6-4-73

13- K1.1- 1	5/ 7/73
13- K1.1- 2	6/ 4/73
13- K1.1- 3	6/ 4/73
13- K1.2- 1	12/11/72
13- K1.3- 1	11/20/72
13- K1.3- 2	2/28/73
13- K1.4- 1	11/20/72
13- K1.5- 1	12/11/72
13- K2.1- 1	4/ 2/73
13- K2.1- 2	2/ 5/73
13- K2.1- 3	2/ 5/73
13- K2.1- 4	12/11/72
13- K2.1- 5	11/20/72
13- K2.1- 6	4/20/73
13- K2.1- 7	4/20/73
13- K2.1- 8	6/ 4/73
13- K2.1- 9	12/11/72
13- K2.1-10	4/20/73
13- K2.1-11	4/20/73
13- K2.1-12	4/20/73
13- K2.1-13	11/20/72
13- K2.1-14	12/11/72
13- K2.1-15	12/11/72
13- K2.2- 1	2/ 5/73
13- K2.2- 2	2/ 5/73
13- K2.2- 3	2/ 5/73
13- K2.2- 4	11/20/72
13- K2.2- 5	12/11/72
13- K2.3- 1	11/20/72
13- K2.3- 2	12/11/72
13- K2.3- 3	6/ 4/73
13- K2.4- 1	11/20/72
13- K2.4- 2	11/20/72
13- K2.4- 3	2/ 5/73
13- K2.4- 4	2/ 5/73
13- K2.4- 5	2/ 5/73
13- K2.4- 6	11/20/72
13- K2.4- 7	2/ 5/73
13- K2.4- 8	11/20/72
13- K2.4- 9.1	11/20/72
13- K2.4- 9.2	11/20/72
13- K2.4-10	11/20/72
13- K2.4-11	11/20/72
13- K2.4-12	11/20/72
13- K2.4-13	4/20/73
13- K2.4-14	4/20/73
13- K2.4-15	12/11/72
13- K2.4-16	4/20/73
13- K2.5- 1	11/20/72
13- K2.5- 2	11/20/72
13- K2.5- 3.1	11/20/72
13- K2.5- 3.2	11/20/72
13- K2.5- 4	11/20/72
13- K2.5- 5	4/20/73
13- K2.5- 6	4/20/73
13- K2.5- 7	11/20/72
13- K3.1- 1	11/20/72
13- K3.1- 2	12/11/72
13- K3.1- 3	12/11/72
13- K3.1- 4	11/20/72
13- K3.1- 5	12/11/72
13- K3.1- 6	6/ 4/73
13- K3.1- 7	6/ 4/73
13- K3.1- 8	12/11/72
13- K3.1- 9	6/ 4/73
13- K3.1-10	4/20/73
13- K3.1-11	11/20/72
13- K3.1-12	4/20/73
13- K3.2- 1	11/20/72
13- K3.3- 1	11/20/72
13- K3.3- 2	11/20/72
13- K3.3- 3	12/11/72
13- K3.3- 4	11/20/72
13- K3.3- 5	11/20/72
13- K3.3- 6	11/20/72
13- K3.3- 7	11/20/72
13- K3.3- 8	11/20/72
13- K3.3- 9	11/20/72
13- K3.3-10	11/20/72
13- K3.3-11	11/20/72
13- K3.3-12	6/ 4/73
13- K3.3-13	11/20/72
13- K3.3-14	6/ 4/73
13- K3.3-15	2/ 5/73
13- K3.3-16	11/20/72
13- K3.3-17	11/20/72
13- K3.4- 1	2/ 5/73
13- K3.4- 2	2/ 5/73
13- K3.4- 3	2/ 5/73
13- K3.4- 4	11/24/72
13- K3.4- 5.1	2/ 5/73
13- K3.4- 5.2	11/24/72
13- K3.4- 6	2/ 5/73
13- K3.4- 7	11/24/72
13- K3.4- 8	11/24/72
13- K3.4- 9	11/24/72
13- K3.4-10	6/ 4/73
13- K3.4-11	11/24/72
13- K3.4-12.1	11/24/72
13- K3.4-12.2	6/ 4/73
13- K3.5- 1	2/ 5/73
13- K3.5- 2	11/20/72

SKILLING, HELLE, CHRISTIANSEN, ROBERTSON — Structural & Civil Engineers

PROJECT	TITLE	DATE
THE WORLD TRADE CENTER	DRAWING BOOK 13 ~ DATE PAGE	2/ 5/73

REVISIONS
11-24-72
12-11-72
2-5-73
5-7-73
6-4-73

13- K4.1- 1	6/ 4/73	13- K5.5- 1	11/24/72	13- K7.1- 1	2/ 5/73	13- K11.1-1	5/ 7/73
13- K4.1- 2	6/ 4/73			13- K7.2- 1	11/20/72	13- K11.1-2	5/ 7/73
13- K4.2- 1	6/ 4/73	13- K6.1- 1	11/20/72	13- K7.3- 1	11/20/72	13- K11.1-3.1	5/ 7/73
13- K4.3- 1	11/24/72	13- K6.1- 2	11/20/72			13- K11.1-3.2	5/ 7/73
13- K4.3- 2	11/24/72	13- K6.1- 3	11/20/72			13- K11.1-3.3	5/ 7/73
13- K4.3- 3	11/20/72	13- K6.1- 4	11/20/72	13- K8.1- 1	11/24/72	13- K11.1-3.4	5/ 7/73
13- K4.3- 4	11/20/72	13- K6.1- 5	4/20/73	13- K8.1- 2	11/24/72	13- K11.1-4	5/ 7/73
		13- K6.2- 1	11/20/72	13- K8.1- 3	6/ 4/73	13- K11.1-5.1	5/ 7/73
13- K5.1- 1	11/24/72	13- K6.2- 2	11/20/72	13- K8.2- 1	2/ 5/73	13- K11.1-5.2	5/ 7/73
13- K5.1- 2	11/24/72	13- K6.2- 3	11/20/72	13- K8.2- 2	2/ 5/73	13- K11.2-1	5/ 7/73
13- K5.2- 1	4/20/73	13- K6.2- 4	2/ 5/73	13- K8.3- 1	2/ 5/73	13- K11.2-2.1	5/ 7/73
13- K5.3- 1.1	11/24/72			13- K8.3- 2	11/24/72	13- K11.2-2.2	5/ 7/73
13- K5.3- 1.2	11/24/72			13- K8.3- 3	11/24/72	13- K11.2-2.3	5/ 7/73
13- K5.3- 1.3	2/ 5/73					13- K11.2-3.1	5/ 7/73
13- K5.3- 2	11/24/72			13- K9.1- 1	12/11/72	13- K11.2-3.2	5/ 7/73
13- K5.3- 3.1	11/24/72			13- K9.1- 2	4/20/73	13- K11.2-4.1	5/ 7/73
13- K5.3- 3.2	4/20/73			13- K9.2- 1	11/20/72	13- K11.2-4.2	5/ 7/73
13- K5.3- 4	11/24/72			13- K9.2- 2	4/20/73	13- K11.2-5.1	5/ 7/73
13- K5.3- 5	11/24/72			13- K9.2- 3	11/20/72	13- K11.2-5.2	5/ 7/73
13- K5.3- 6	11/24/72			13- K9.2- 4	11/20/72	13- K11.3-1	5/ 7/73
13- K5.3- 7	11/24/72					13- K11.3-2	5/ 7/73
13- K5.4- 1	11/24/72					13- K11.4-1	5/ 7/73
				13- K10.1-1	5/ 7/73	13- K11.4-2	5/ 7/73
				13- K10.1-2	3/15/73	13- K11.4-3	6/ 4/73
				13- K10.1-3	3/15/73		
				13- K10.1-4	3/15/73		
				13- K10.2-1	3/15/73	13- K12 -1	5/ 7/73
				13- K10.2-2	3/15/73	13- K12 -2	5/ 7/73
				13- K10.3-4	3/15/73		
						13- K13-1	1/12/73
						13- K13-2	1/12/73
						13- K13-3	1/12/73
						13- K13-4	1/12/73

LICENSED PROFESSIONAL ENGINEER
LESLIE E. ROBERTSON
No 34360
OF THE STATE OF NEW YORK

SKILLING, HELLE, CHRISTIANSEN, ROBERTSON — Structural & Civil Engineers

PROJECT THE WORLD TRADE CENTER | TITLE DRAWING BOOK 13 - GENERAL NOTES | DATE 11-3-72

REVISIONS

Released for construction 11/20/72 12/11/72

GENERAL NOTES

The following provisions apply to all Drawing Book 13 drawings, unless specifically shown as noted otherwise in Drawing Book 13 drawings or in the plans.

A. Specification

1. All material, fabrication and erection shall be in accordance with Basic Project Specifications.

B. Dimensions

1. Contractor will be furnished field measurement for existing column locations and splice elevations prior to submitting mill orders.
2. Shop Drawings must indicate these field measurements prior to approval.
3. Columns shall be installed vertical above existing columns, with girder lengths adjusted to fit; however, detail material for future columns shall be installed in its theoretical location.

C. Materials

1. All steel sections, plates, detail materials and other members shall be ASTM A36, unless specifically shown otherwise.
2. Members indicated in the Drwings as "tube" are rectangular seamless structural tubing and shall conform to ASTM A501.

D. Bolted Connections

1. All bolted connections shall be high strength friction type, except where specifically noted as A307, or A490X (Bearing Type with threads excluded in shear plane).
2. A minimum of 2-3/4" Ø bolts shall be used at each member connected except where specifically noted in the Drawings.

E. Welded Connections

1. All manual welded electrodes shall be E70XX low hydrogen type.
2. All submerged arc welding shall be Grade SAW-2.
3. Studs shall be applied using a stud welding system providing a minimum current of 2000 amperes.
4. Where the symbols are shown in the drawings the fabricator shall provide a complete penetration weld. The fabricator may provide single or double bevel, V, U or J groove welds conforming to approved welding procedure specifications.

F. Erection Sequence

1. Character of two-way girder connections require sequenced erection of girders including shoring of one end prior to installing perpendicular supporting girder; therefore, Contractor to submit Erection Sequence and shoring to the Engineer for approval.

F. Miscellaneous

1. Specific details and notes shall prevail over general details and notes.

   Any conflict or apparent conflict between drawings and/or notes shall be submitted to the Engineer for his decision before construction or preparation of shop drawings has begun.
2. Section/details indicated 3.3-10E means Section/Detail E in Drawing Book 13 page 13-K3.3-10.
3. Page numbers in Drawing Book 13 which include more than one page are numbered 2.1, 2.2, 2.3, etc. Page numbers which include only one page are numbered 2 with no decimal. Where reference is made to page numbers with more than one page, the decimal portion of the page number is not included. Therefore, a section or detail indicated 3-2 may be 13-K3-2.1, 2.3, etc.

G. Finishing

1. Compression joints depending upon contact bearing are indicated thus in the drawings.
2. Where surfaces are finished by milling, plate thickness shown in the Drawings shall be reduced a maximum of 1/8 inch for plates up to and including 2 inches thick, a maximum of 1/4 inch for plates over 2 inches thick, except that plates indicated thus (1.2-1G) in the Drawings shall be increased in thickness to allow for milling.
3. Top of Base Plates at future columns shall be at elevation shown in the Drawings, after erection. Base Plates shall be thickened as required for milling operation in order to achieve this elevation.
4. The surface of each girder flange in contact with a cap plate or base plate may be considered finished without further work where the following criteria is met: Contact bearing surfaces shall have at least 75% of the entire contact area in full bearing and the separation of the remaining portion shall not exceed 0.01 inch except adjacent to toes of flanges or corners of plates where a localized separation not exceeding 0.025 inch is permissible.

LICENSED PROFESSIONAL ENGINEER — LESLIE E. ROBERTSON — NO. 34360 — UNIVERSITY OF THE STATE OF NEW YORK

DESIGNED

DRAWN

REVIEWED

13-K1.2-1

SKILLING, HELLE, CHRISTIANSEN, ROBERTSON — Structural & Civil Engineers

PROJECT THE WORLD TRADE CENTER | TITLE PIPE OPENINGS IN BEAMS | DATE 11-3-72

REVISIONS

Released for Construction 11-20-72

A E

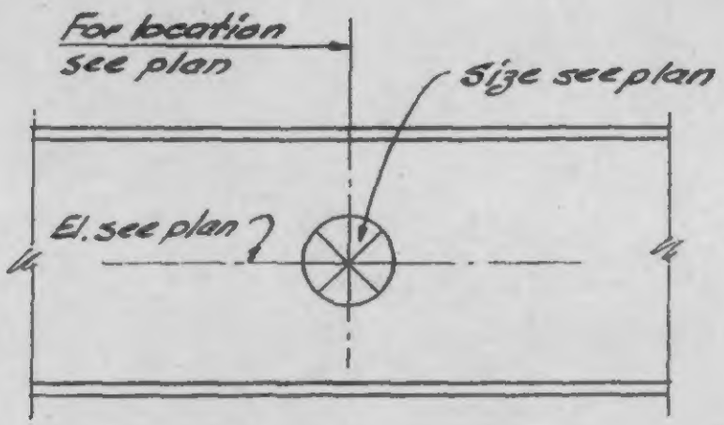

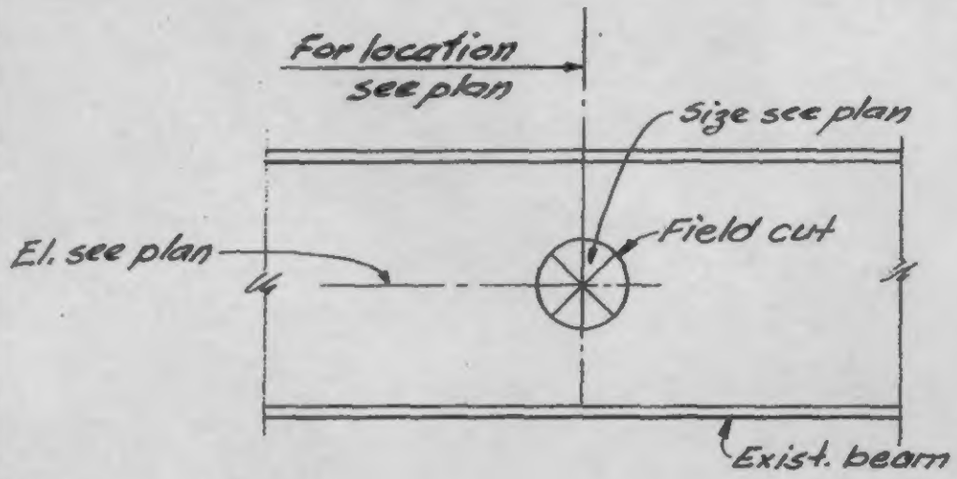

B F

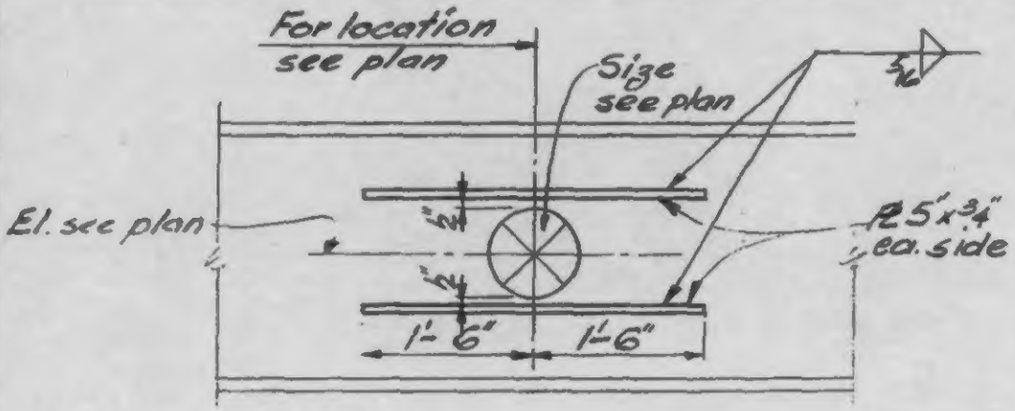

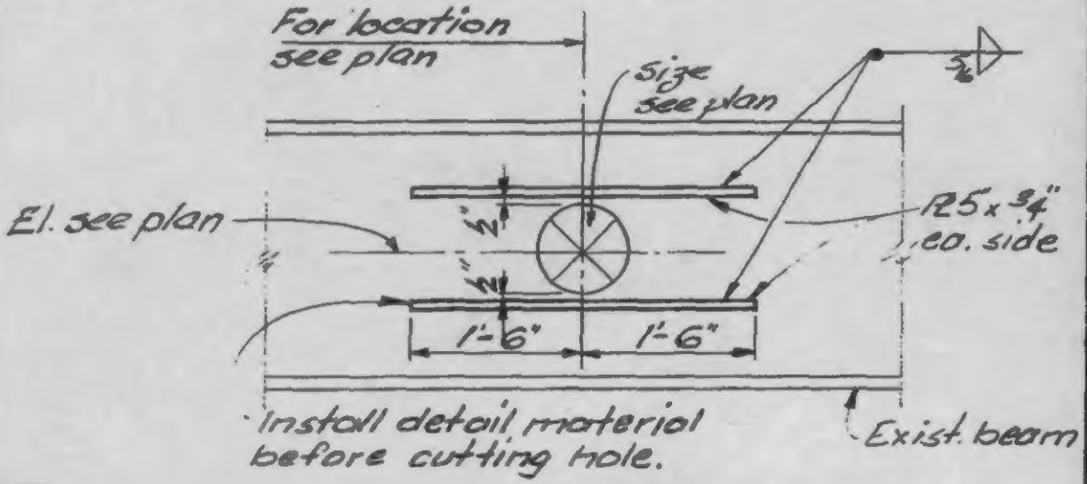

C G

D H

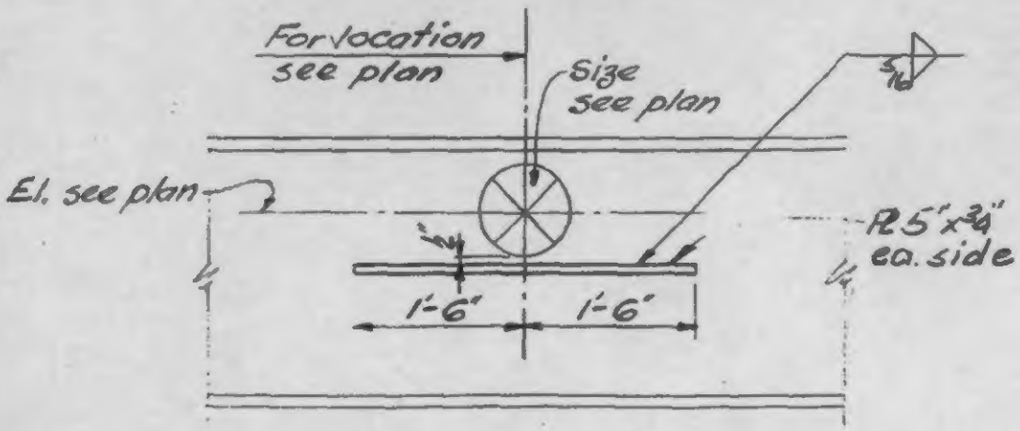

C as shown
D upside down

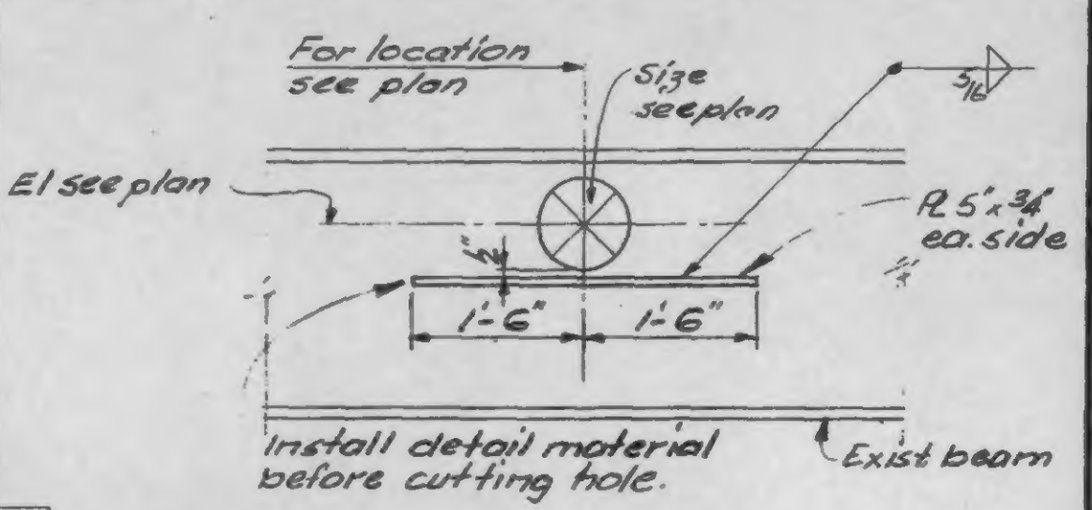

G as shown
H upside down

LICENSED PROFESSIONAL ENGINEER LESLIE E. ROBERTSON No. 34360 UNIVERSITY OF THE STATE OF NEW YORK

DESIGNED

DRAWN John Grieves

REVIEWED

13-K1.3-1

SKILLING, HELLE, CHRISTIANSEN, ROBERTSON — Structural & Civil Engineers

PROJECT: THE WORLD TRADE CENTER

TITLE: PIPE OPENINGS IN BEAMS

DATE: 2-12-73

REVISIONS

2-26-73

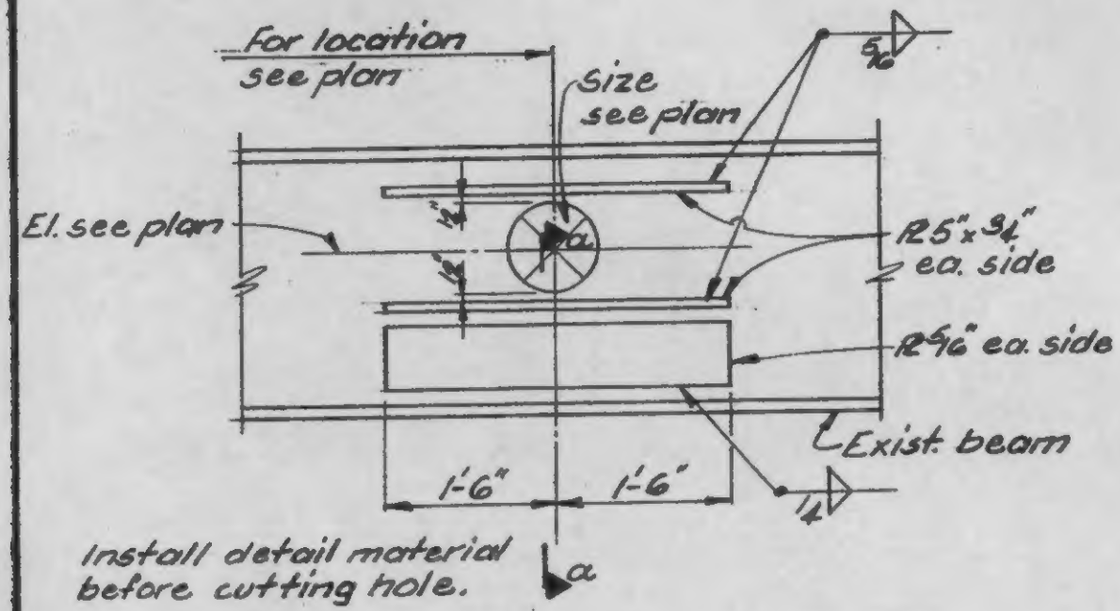

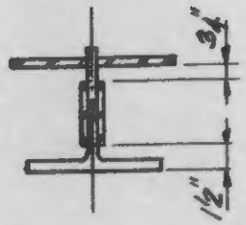

A | a

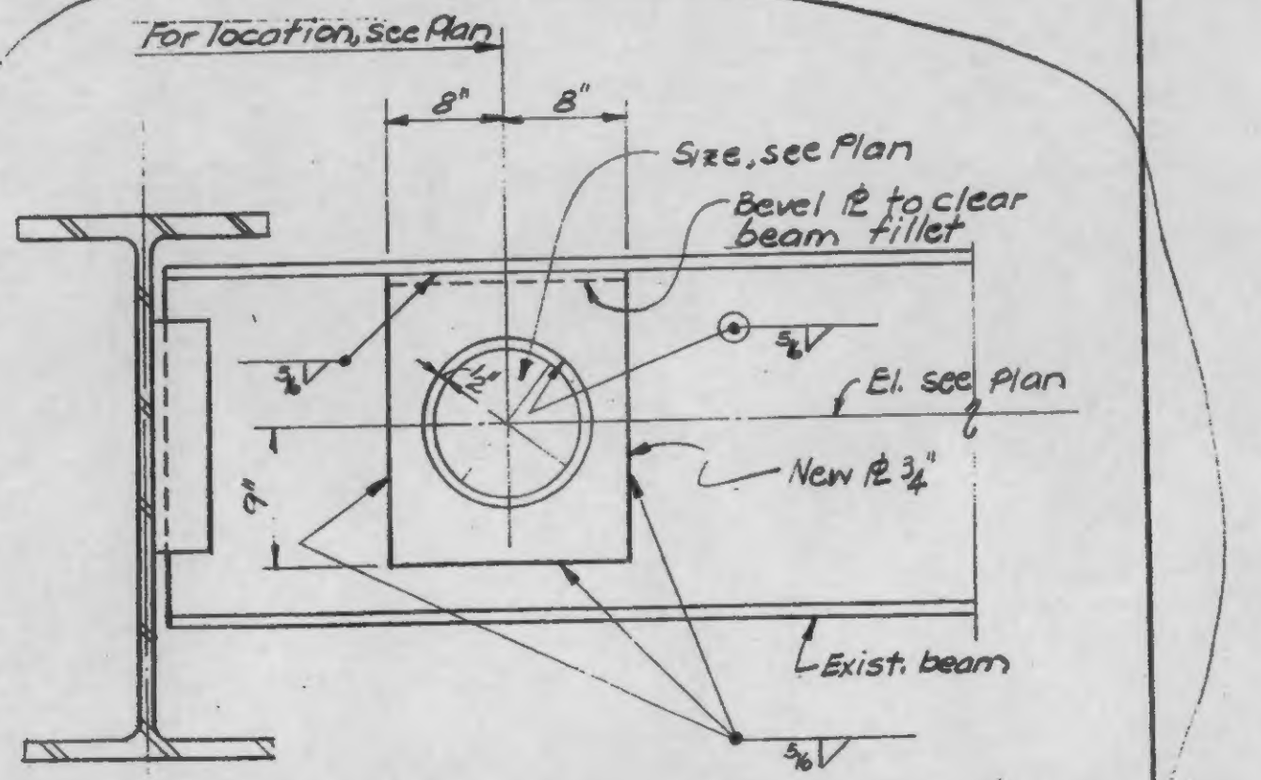

Note: Install & completely weld new R before cutting hole in exist. beam

B

DESIGNED

DRAWN
T.R.

REVIEWED

13-K1.3-2

SKILLING, HELLE, CHRISTIANSEN, ROBERTSON — Structural & Civil Engineers

PROJECT: THE WORLD TRADE CENTER | TITLE: TYPICAL STUD DETAILS | DATE: 11-3-72

REVISIONS

Released for construction 11-20-72

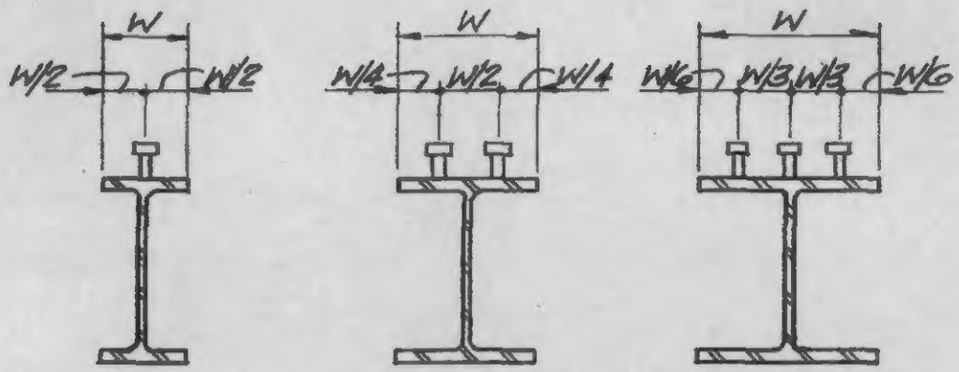

One Row WS 6 & WS 9 (Note 4)

Two Rows (Note 4)

Three Rows (Note 5)

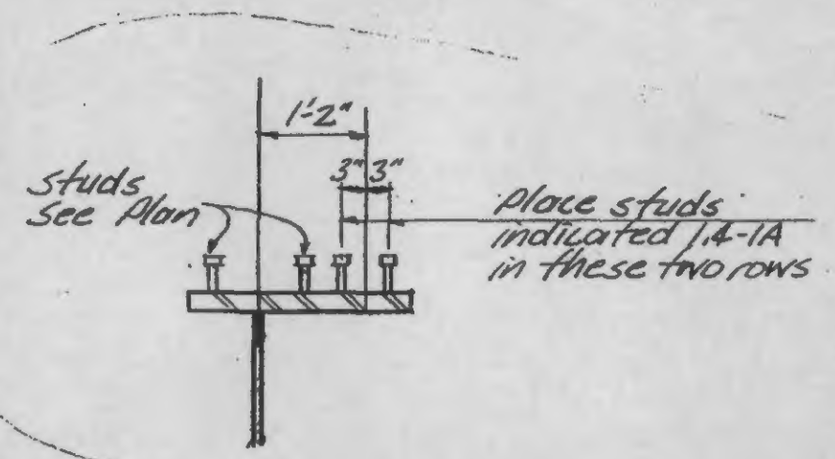

A

Notes:

3. All studs are 3/4"ϕ x 0'-3" headed shear studs.
4. Use two rows for W=6" to W=9" where studs in a single row would otherwise be less than 4" o.c. Use two rows for W=9" or more where studs in one row would otherwise be less than 4" o.c.
5. Use three rows for W=9" or more where studs in two rows would otherwise be less than 4" o.c.

LICENSED PROFESSIONAL ENGINEER — LESLIE E. ROBERTSON — No. 34360 — UNIVERSITY OF THE STATE OF NEW YORK

DESIGNED

DRAWN T.R

REVIEWED

13-K1.4-1

SKILLING, HELLE, CHRISTIANSEN, ROBERTSON — Structural & Civil Engineers

PROJECT: THE WORLD TRADE CENTER | TITLE: PART PLAN-EXISTING BEAMS TO BE REMOVED | DATE: 11-20-72

REVISIONS

RELEASED FOR CONSTRUCTION 11-20-72

12-11-72

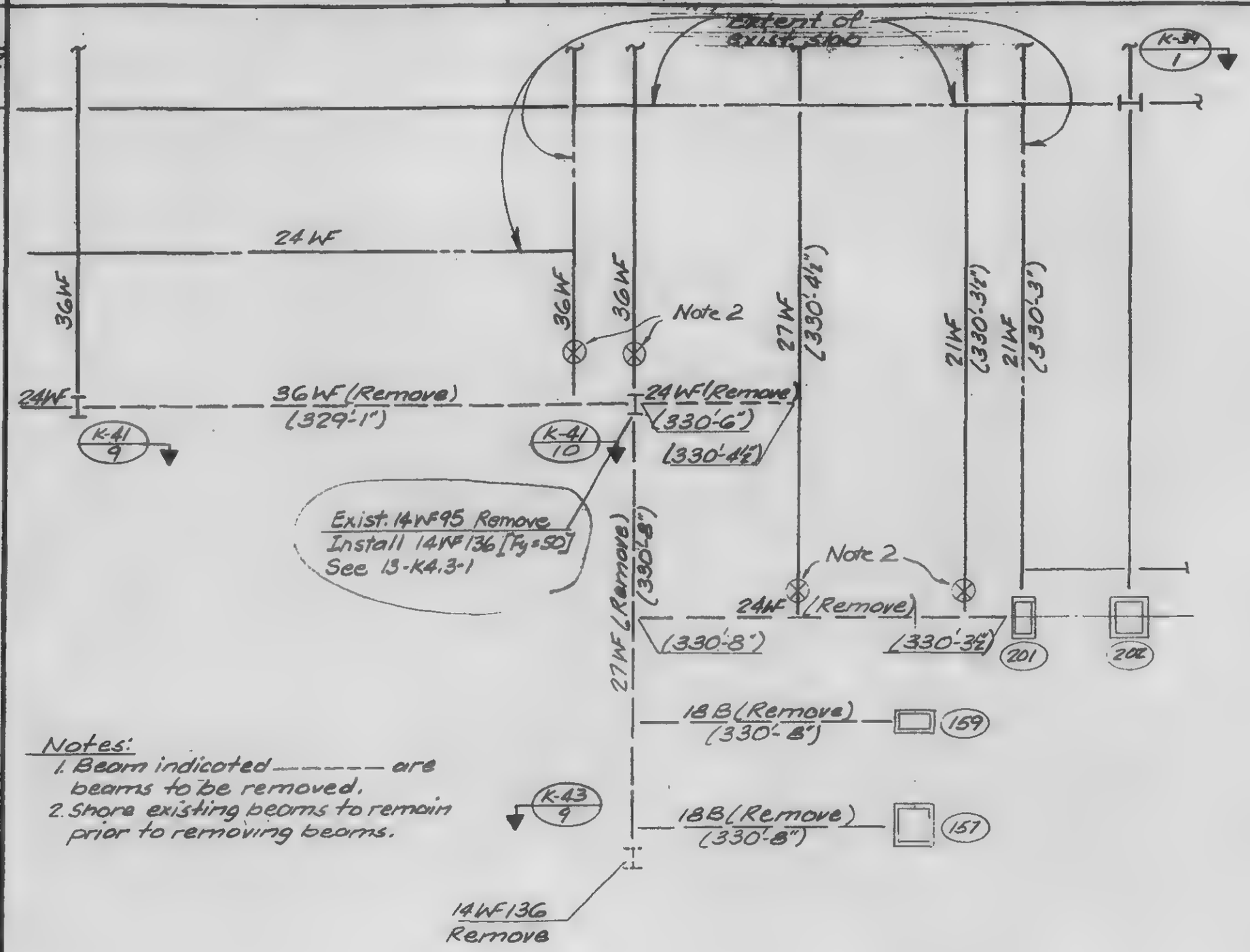

Notes:
1. Beam indicoted ------ are beams to be removed.
2. Shore existing beams to remain prior to removing beams.

Part Plan at El. 332'-0"

LICENSED PROFESSIONAL ENGINEER — LESLIE E. ROBERTSON — No 34360 — UNIVERSITY OF THE STATE OF NEW YORK

DESIGNED

DRAWN TR

REVIEWED

13-K1.5-1

SKILLING, HELLE, CHRISTIANSEN, ROBERTSON — STRUCTURAL ENGINEERS

PROJECT THE WORLD TRADE CENTER

TITLE GIRDER ELEVATION LINE 9F

DATE 11-3-72

REVISIONS

RELEASE FOR CONSTRUCTION 11-20-72

2-5-73

4-2-73

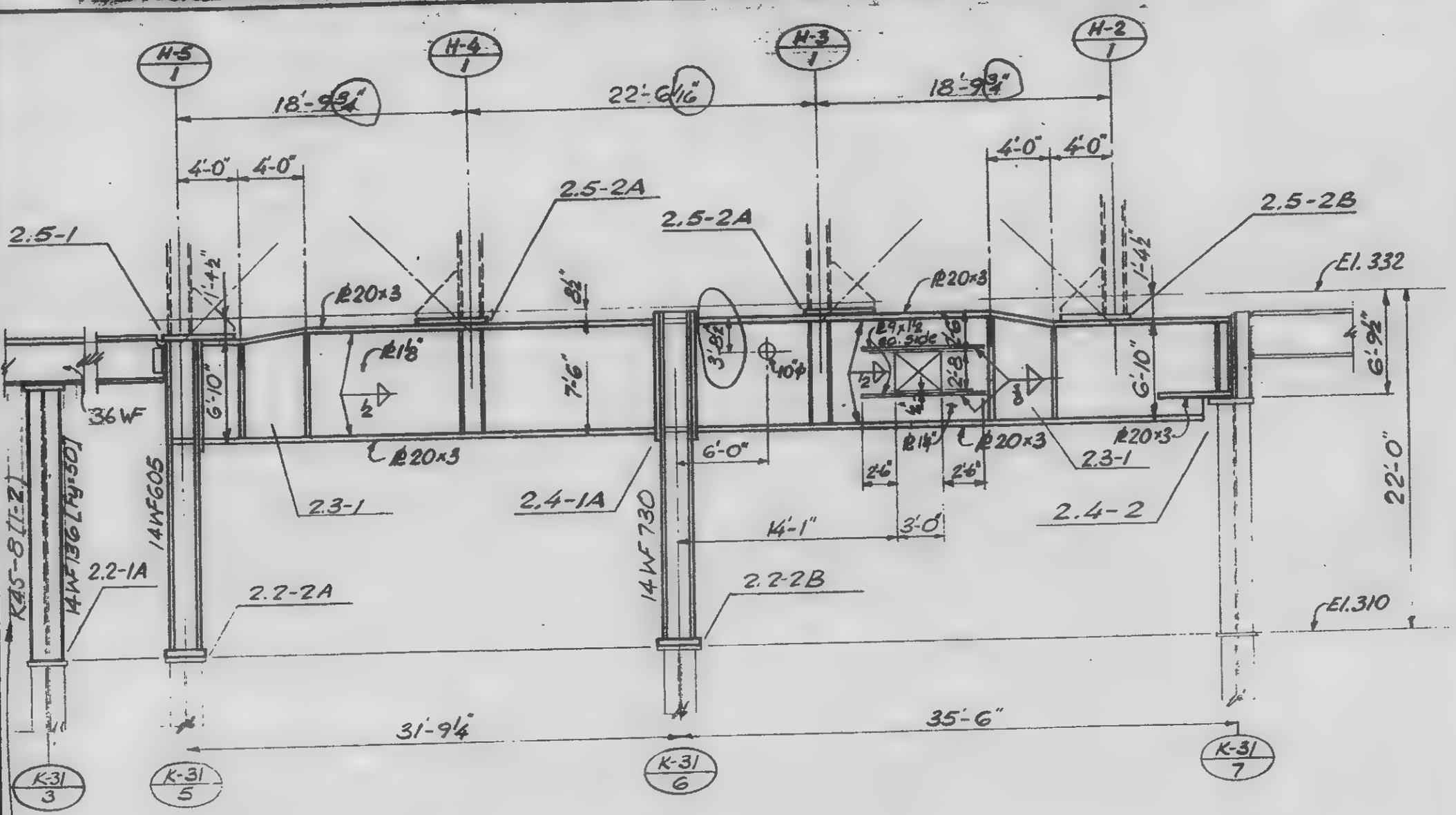

Note

Cols. designated with KXX-X(X-X) are as fabricated. Columns to be reworked as reqd and used in locations indicated.

LICENSED PROFESSIONAL ENGINEER — LESLIE E. ROBERTSON — No. 34260 — UNIVERSITY OF THE STATE OF NEW YORK

DESIGNED

DRAWN John Grieves

REVIEWED

13-K2.1-1

SKILLING, HELLE, CHRISTIANSEN, ROBERTSON — Structural & Civil Engineers

PROJECT THE WORLD TRADE CENTER | TITLE GIRDER ELEVATION LINE 35 | DATE 11-3-72

REVISIONS

- RELEASE FOR CONSTRUCTION 11-20-72
- 12-11-72
- 2-5-73

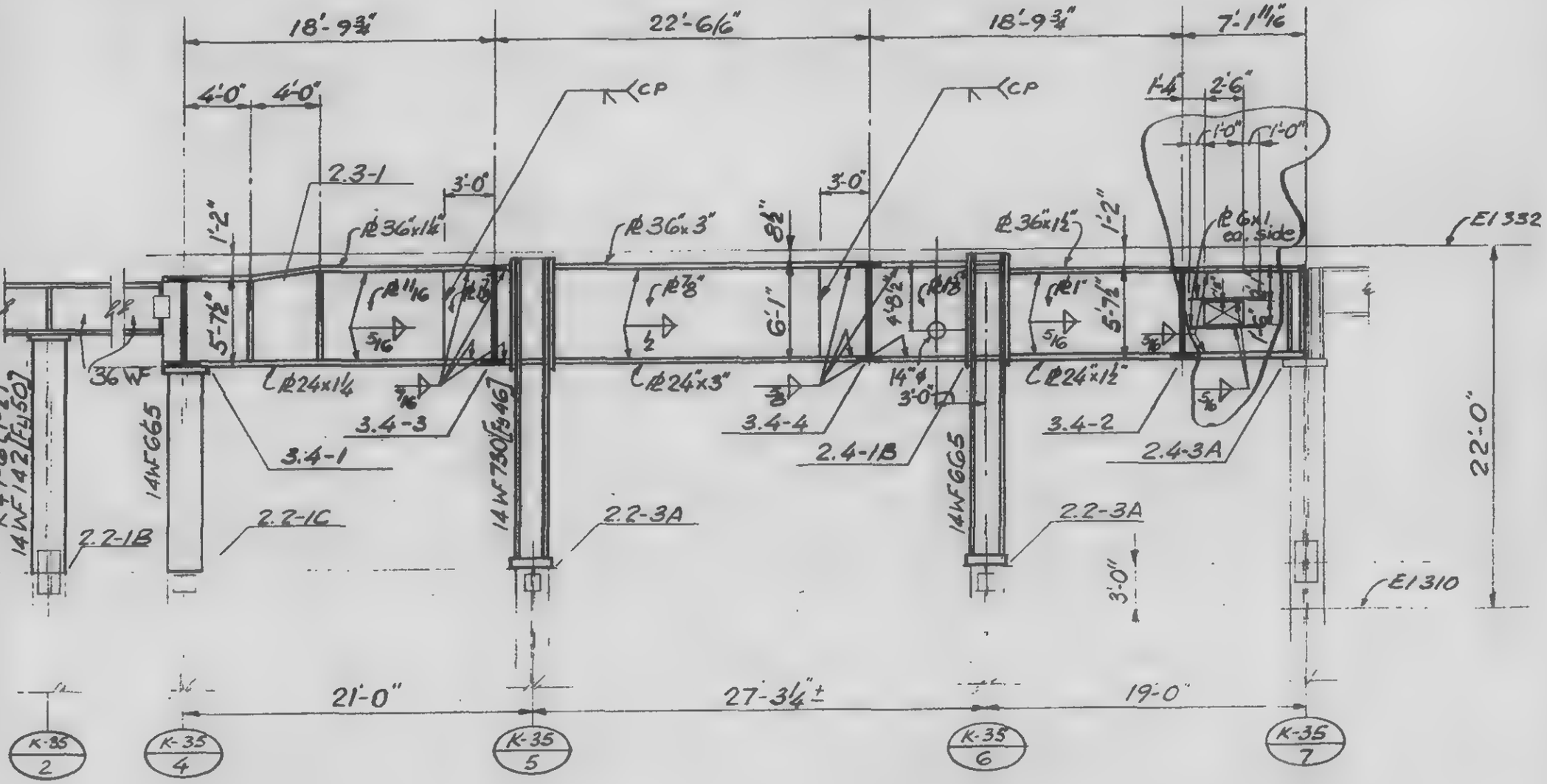

LICENSED PROFESSIONAL ENGINEER — LESLIE E. ROBERTSON — No. 34360 — UNIVERSITY OF THE STATE OF NEW YORK

DESIGNED

DRAWN John Gracias

REVIEWED

13-K2.1-2

SKILLING, HELLE, CHRISTIANSEN, ROBERTSON — Structural & Civil Engineers

PROJECT: THE WORLD TRADE CENTER

TITLE: GIRDER ELEVATION LINE 37

DATE: 11-3-72

REVISIONS

RELEASE FOR CONSTRUCTION 11-20-72

12-11-72

2-5-73

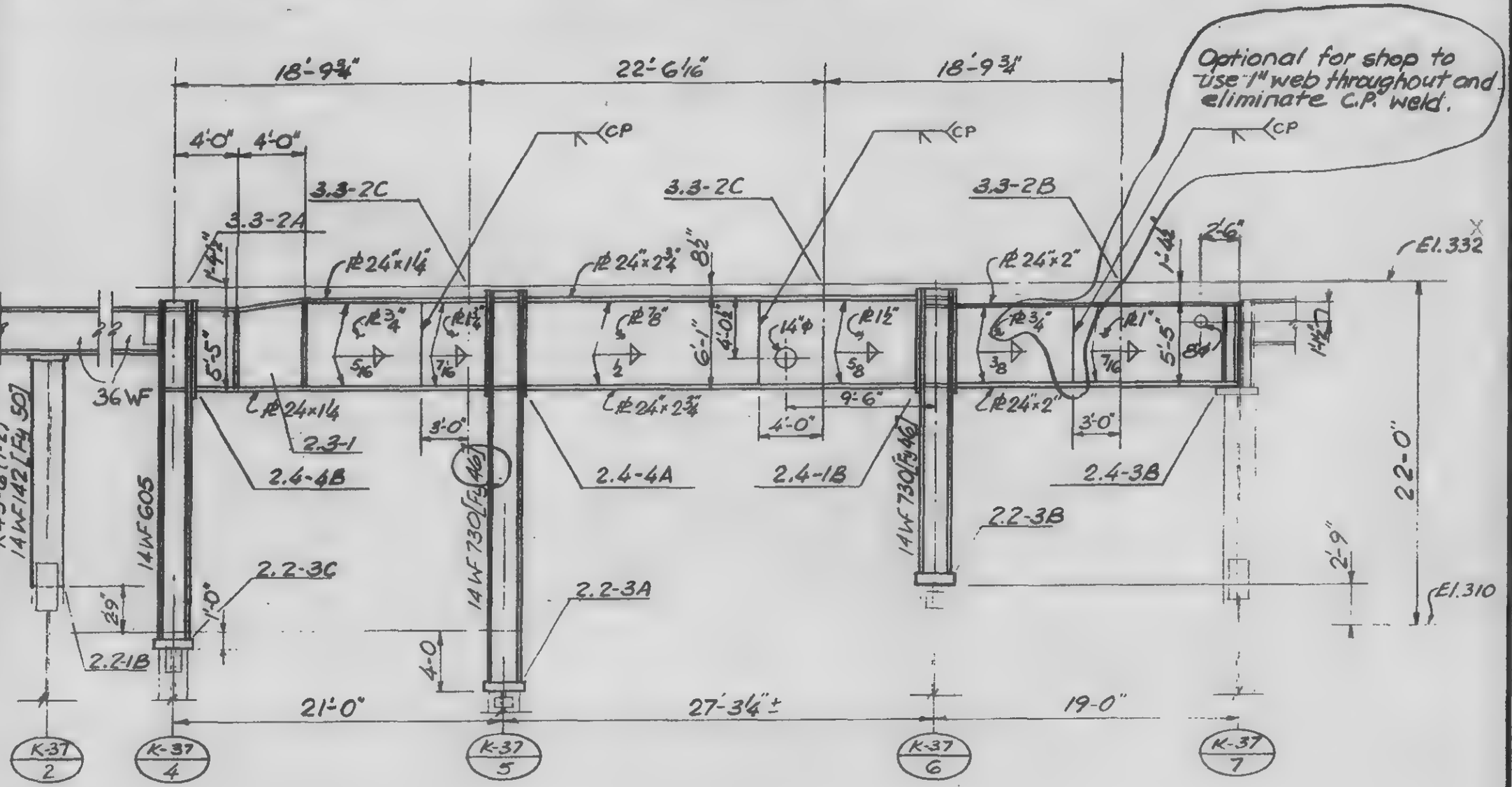

LICENSED PROFESSIONAL ENGINEER — LESLIE E. ROBERTSON — No. 34390 — UNIVERSITY OF THE STATE OF NEW YORK

DESIGNED

DRAWN John Gracias

REVIEWED

13-K2.1-3

SKILLING, HELLE, CHRISTIANSEN, ROBERTSON — Structural & Civil Engineers

PROJECT THE WORLD TRADE CENTER | TITLE GIRDER ELEVATION LINE 41 | DATE 11-3-72

REVISIONS

RELEASE FOR CONSTRUCTION 11-20-72

12-11-72

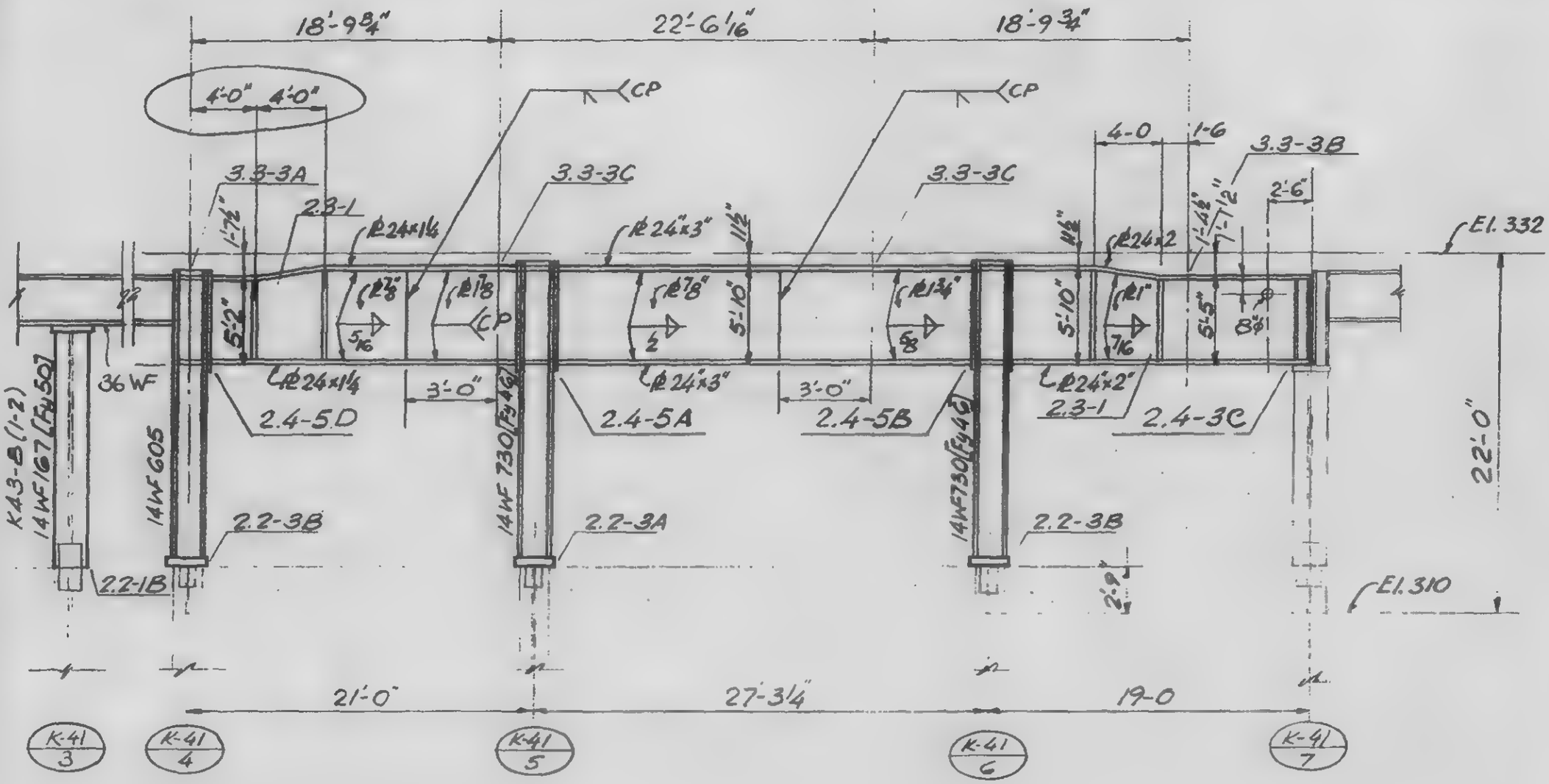

LICENSED PROFESSIONAL ENGINEER — LESLIE E. ROBERTSON — No 34360 — UNIVERSITY OF THE STATE OF NEW YORK

DESIGNED

DRAWN John Griccio

13-K2.1-4

SKILLING, HELLE, CHRISTIANSEN, ROBERTSON — Structural & Civil Engineers

PROJECT: THE WORLD TRADE CENTER | TITLE: GIRDER ELEVATION LINE 43 | DATE: 11-3-72

REVISIONS

- RELEASE FOR CONSTRUCTION 11-20-72

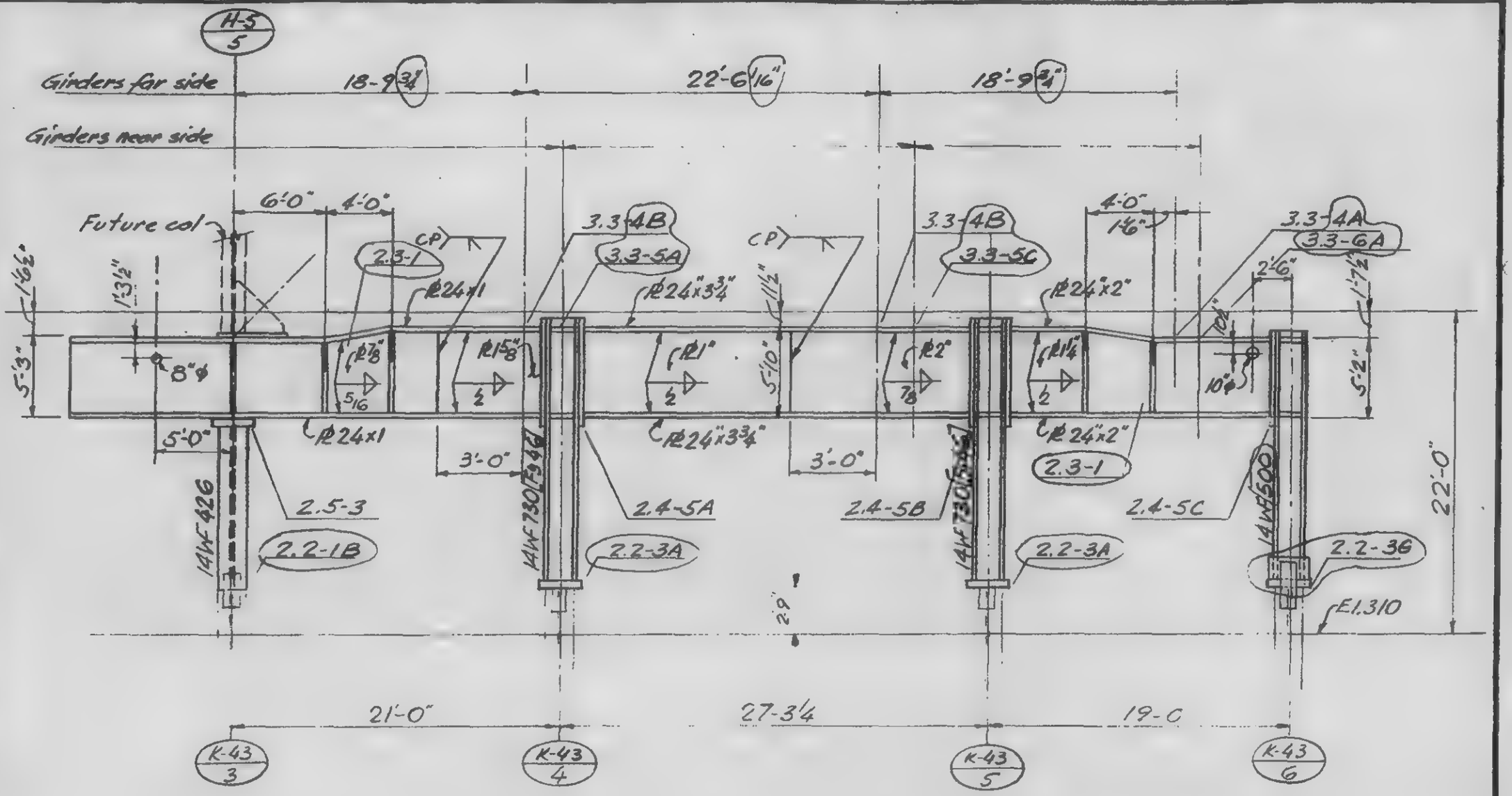

LICENSED PROFESSIONAL ENGINEER — LESLIE E. ROBERTSON — No. 34360 — UNIVERSITY OF THE STATE OF NEW YORK

DESIGNED

DRAWN

13-KZ.1-5

SKILLING, HELLE, CHRISTIANSEN, ROBERTSON — Structural & Civil Engineers

PROJECT: THE WORLD TRADE CENTER | TITLE: GIRDER ELEVATION LINE 45 | DATE: 11-3-72

REVISIONS

- RELEASE FOR CONSTRUCTION 11-20-72
- 12-11-72
- 2-5-73
- 4-20-73

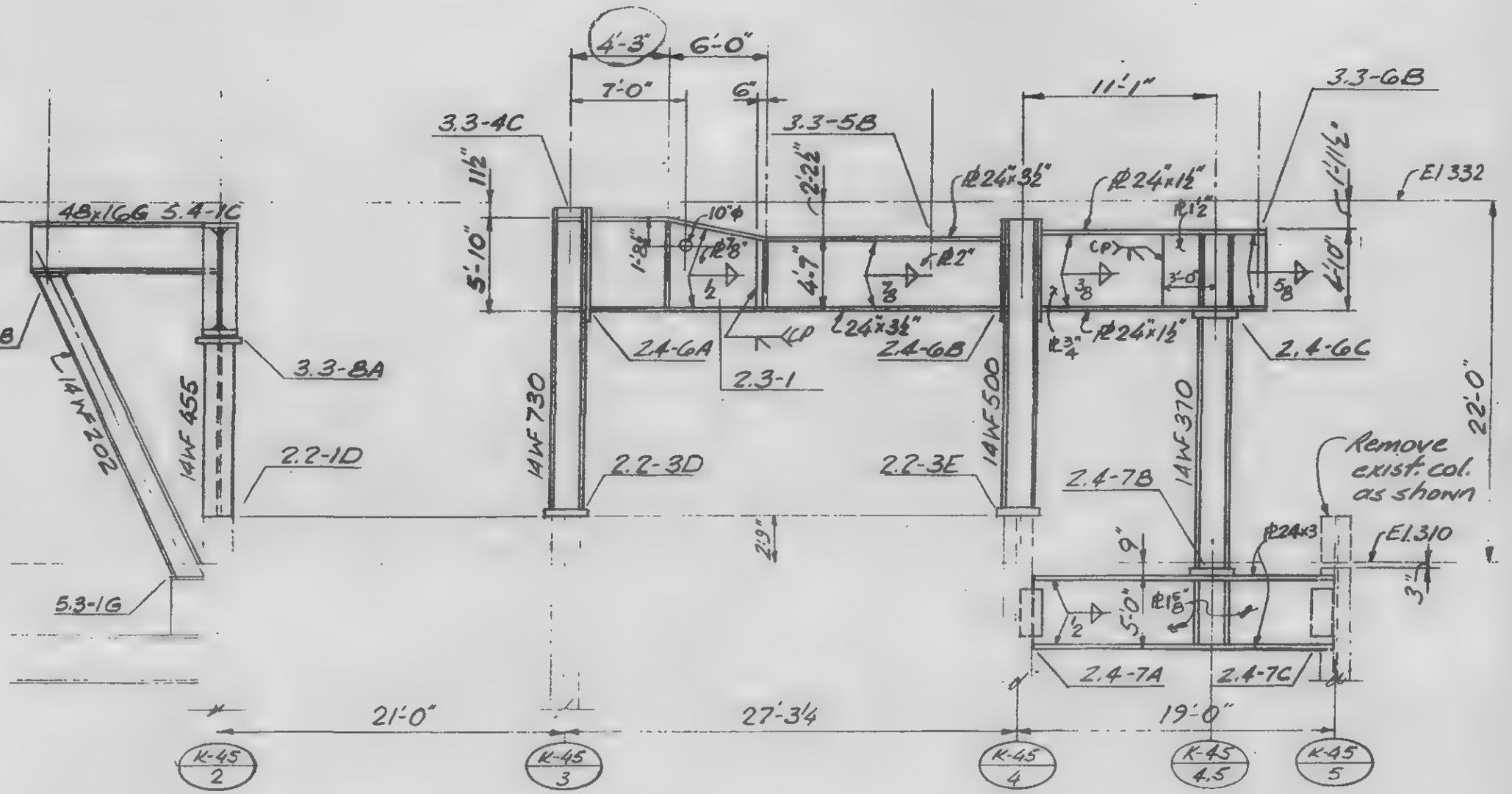

LICENSED PROFESSIONAL ENGINEER — LESLIE E. ROBERTSON — No. 34360 — UNIVERSITY OF THE STATE OF NEW YORK

DESIGNED: K. Chiang

DRAWN: John Sciame

13-K2.1-6

SKILLING, HELLE, CHRISTIANSEN, ROBERTSON — Structural & Civil Engineers

PROJECT: THE WORLD TRADE CENTER | TITLE: GIRDER ELEVATION LINE 47 | DATE: 11-3-72

REVISIONS

- RELEASE FOR CONSTRUCTION 11-20-72
- 12-11-72
- 2-5-73
- 4-20-73

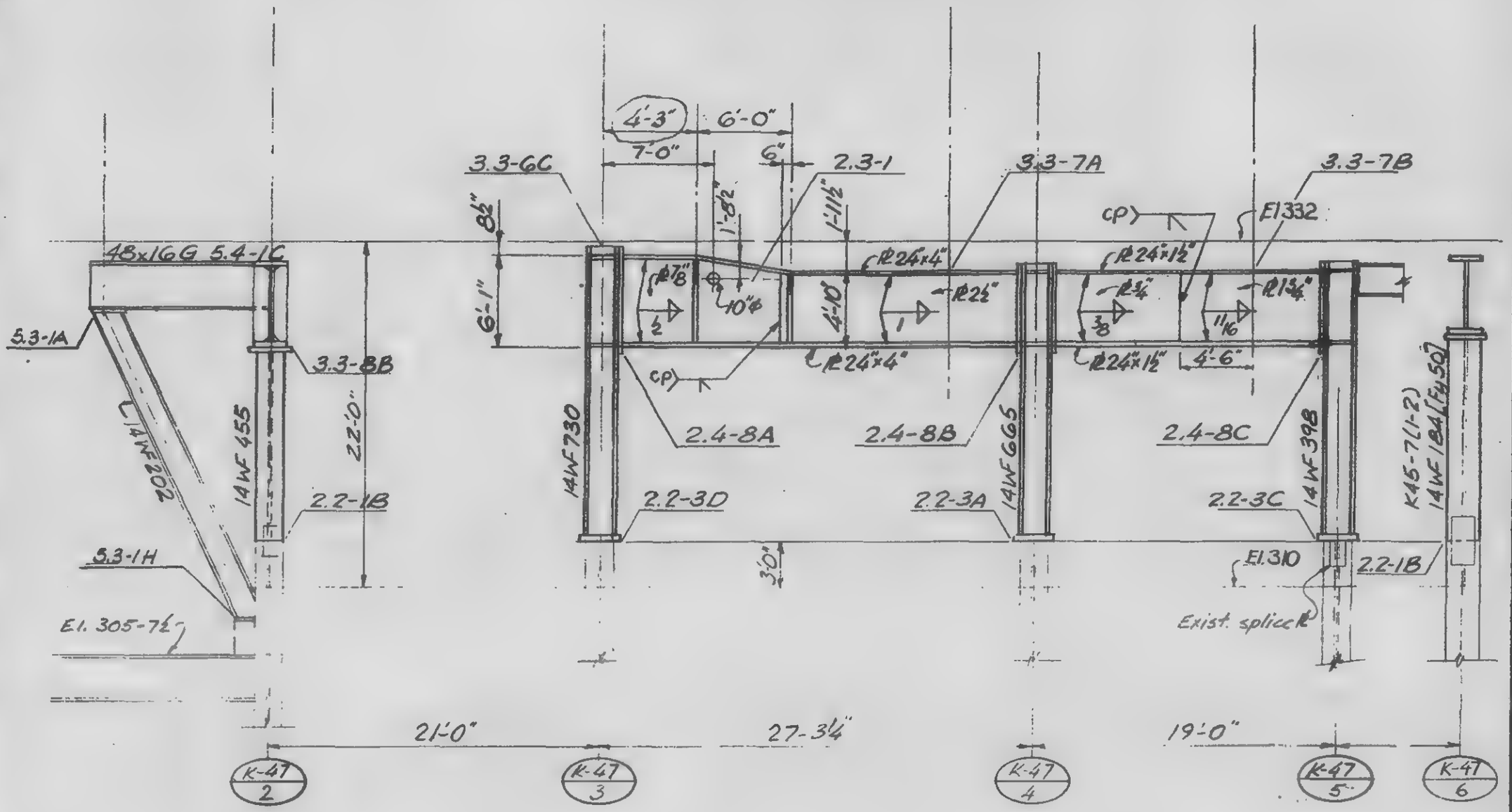

LICENSED PROFESSIONAL ENGINEER — LESLIE E. ROBERTSON — No 34360 — UNIVERSITY OF THE STATE OF NEW YORK

DESIGNED: J. Chiang

DRAWN: John Gracias

CHECKED:

13-K2.1-7

SKILLING, HELLE, CHRISTIANSEN, ROBERTSON — Structural & Civil Engineers

PROJECT THE WORLD TRADE CENTER | TITLE GIRDER ELEVATION | DATE 11-3-72

REVISIONS

RELEASE FOR CONSTRUCTION 11-20-72

12-11-72

6-4-73

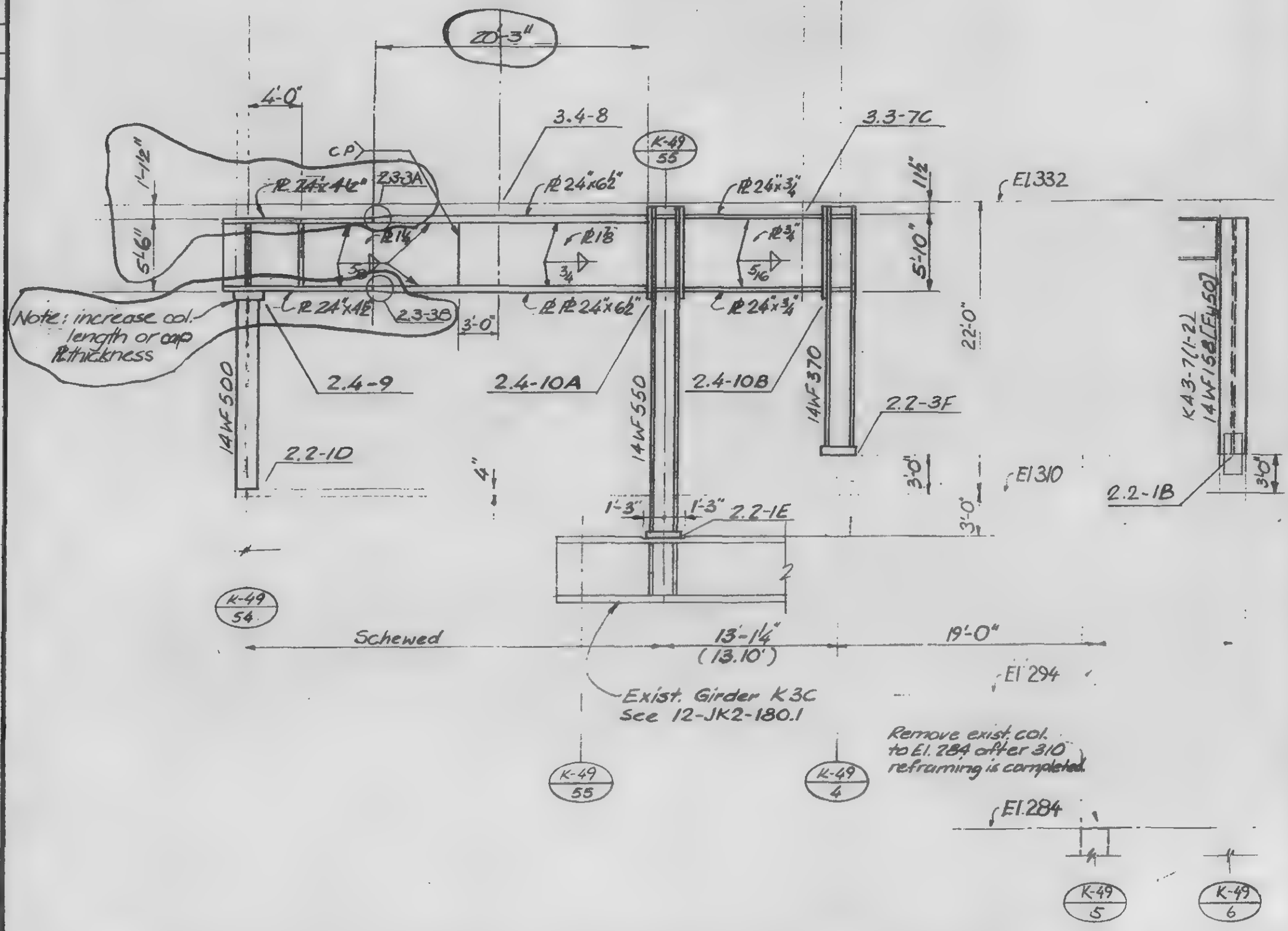

LICENSED PROFESSIONAL ENGINEER — LESLIE E. ROBERTSON — No. 34360 — UNIVERSITY OF THE STATE OF NEW YORK

DESIGNED

DRAWN John Gricenus

REVIEWED

13-K2.1-8

SKILLING, HELLE, CHRISTIANSEN, ROBERTSON — Structural & Civil Engineers

PROJECT: THE WORLD TRADE CENTER | TITLE: GIRDER ELEVATION LINE 51 | DATE: 11-3-72

REVISIONS

RELEASE FOR CONSTRUCTION 11-20-72

12-11-72

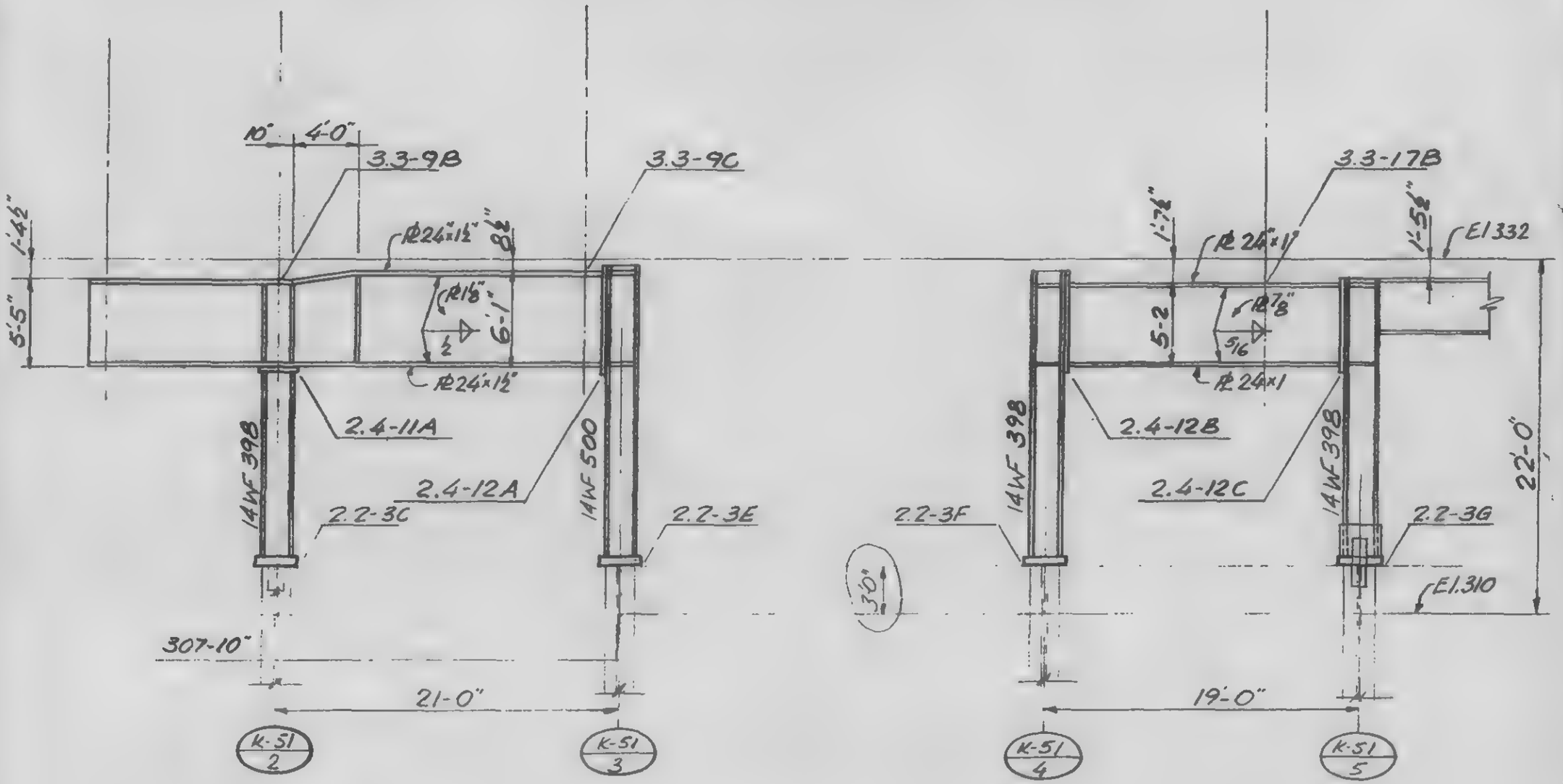

LICENSED PROFESSIONAL ENGINEER — LESLIE E. ROBERTSON — No 34980 — UNIVERSITY OF THE STATE OF NEW YORK

DESIGNED

DRAWN John Gracias

REVIEWED

13-K2.1-9

SKILLING, HELLE, CHRISTIANSEN, ROBERTSON — Structural & Civil Engineers

PROJECT: THE WORLD TRADE CENTER | TITLE: GIRDER ELEVATION LINE 53 | DATE: 11-3-72

REVISIONS

RELEASE FOR CONSTRUCTION 11-20-72

12-11-72

4-20-73

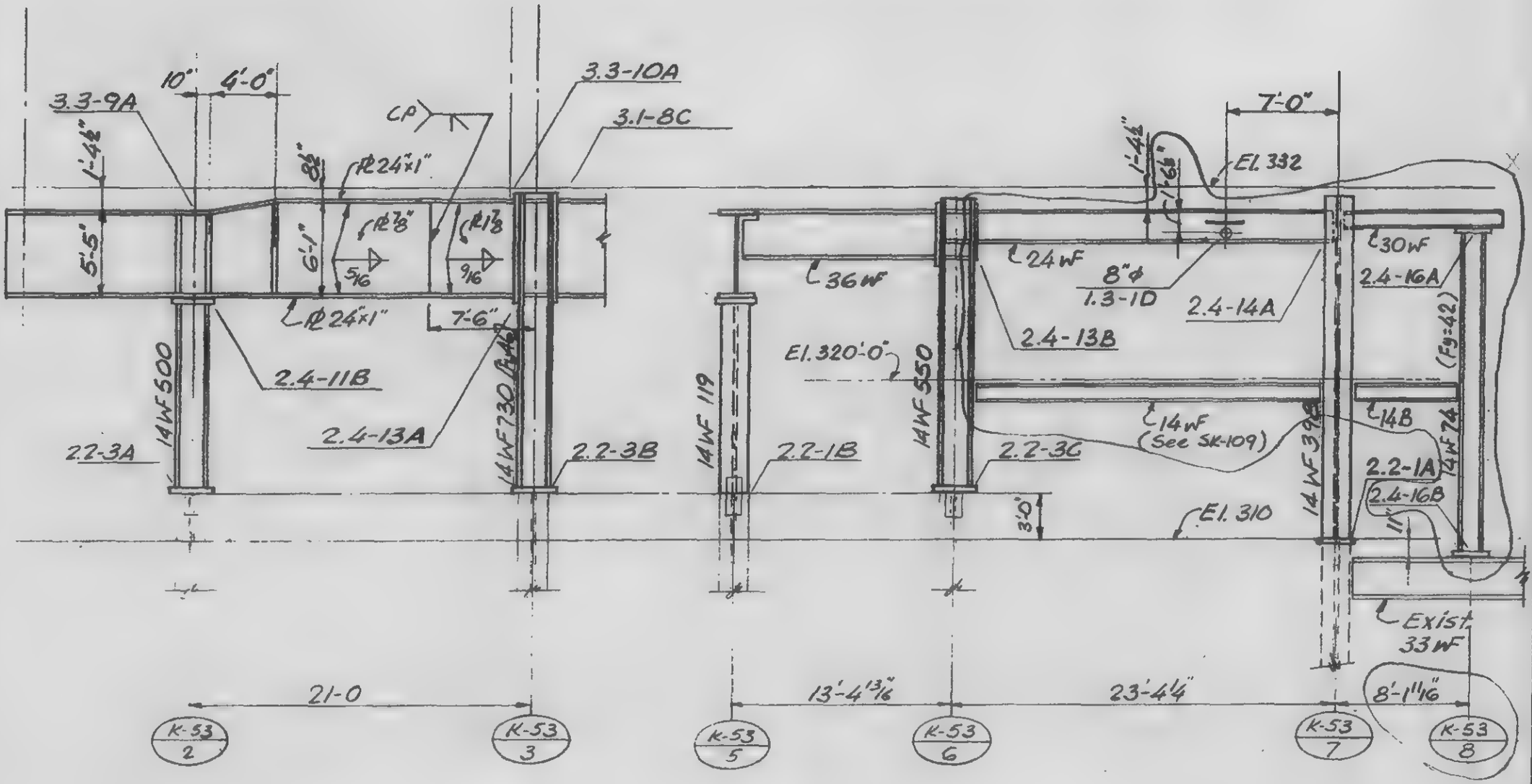

LICENSED PROFESSIONAL ENGINEER — LESLIE E. ROBERTSON — No. 24360 — UNIVERSITY OF THE STATE OF NEW YORK

DESIGNED: K. Chiang

DRAWN: John Grieves

REVIEWED:

13-K2.1-10

SKILLING, HELLE, CHRISTIANSEN, ROBERTSON — Structural and Civil Engineers

PROJECT: THE WORLD TRADE CENTER

TITLE: GIRDER ELEVATION - LINE 65

DATE: 11-3-72

REVISIONS

RELEASE FOR CONSTRUCTION 11-20-72

12-11-72

4-20-73

8-22-73

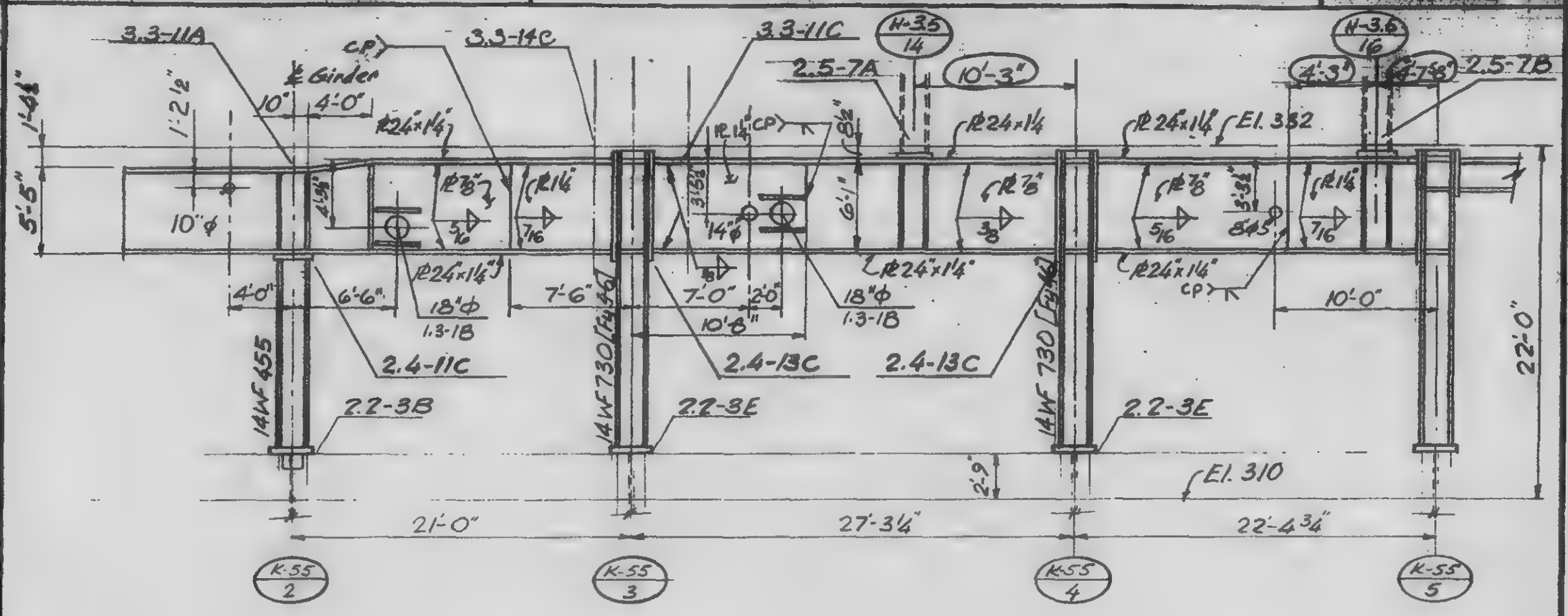

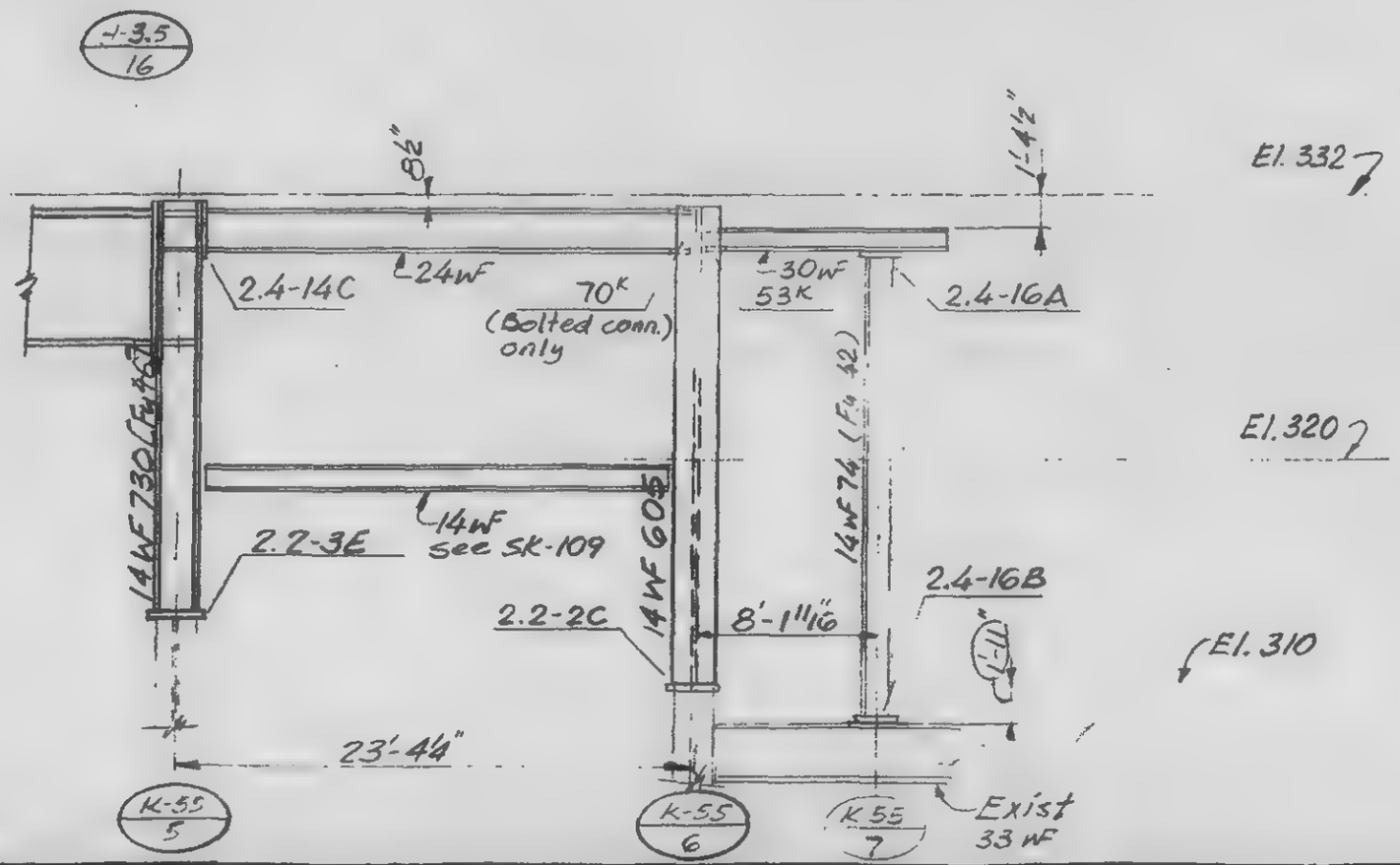

LICENSED PROFESSIONAL ENGINEER
LESLIE E. ROBERTSON
No. 34360
UNIVERSITY OF THE STATE OF NEW YORK

DESIGNED K. Chiang

DRAWN John Gracias

REVIEWED

13-K2.1-11

WORTHINGTON, SKILLING, HELLE & JACKSON — Civil & Structural Engineers

PROJECT: THE WORLD TRADE CENTER | TITLE: COLUMN SCHEDULE - NEW COLUMNS HOTEL AREA | DATE: 12-23-71

REVISIONS
11-27-72

	H-P1	H-P2	H-P3	H-P4	H-P5	H-P6	H-P7
3'-0"							
El. 332'							
	See Dwg. Book 13	3'-0" * See D.B. 13	See D.B. 13	See D.B. 13	See D.B. 13	See D.B. 13	
El. 310'							
3'-0"							
El. 294'	*	*	*	*	*	*	2" 10-JK5-2 A
	14WF426 Fy36	14WF426 Fy36	14WF193 Fy36	14WF193 Fy36	14WF455 Fy36	14WF455 Fy36	Shear studs See 10.JK5-2
El. 284'							14WF264 Fy36 10-JK5-2 A
3'-0"	③	③	③	③	③	③	③ 10-JK5-2 A
El. 274'							
El. 264'							10-JK5-2 A
	14WF500 Fy36	14WF500 Fy36	14WF219 Fy36	14WF219 Fy36	14WF500 Fy36	14WF500 Fy36	14WF264 Fy36
El. 253							
Top of base Pl at El. 241'							
Base Plate	60"x6¾"x5'-6" ① Fy36	60"x6¾"x5'-6" ① Fy36	41"x4⅞"x3'-8" ① Fy36	41"x4⅞"x3'-8" ① Fy36	60"x9½"x5'-6" ①② Fy36	60"x6¾"x5'-6" ① Fy36	45"x4⅝"x4'-7" ① Fy36

*. Provide proper splice pls., bolt holes & finished col. top for future columns. See 10-JK2-4.
① See 10-JK3-2
② See Det B 8 JK5 9.5
③ See 10-JK2-4

DESIGNED K. CHIANG
DRAWN A FRANQUI
REVIEWED W.P.L.

LICENSED PROFESSIONAL ENGINEER LESLIE E. ROBERTSON No 34360 UNIVERSITY OF THE STATE OF NEW YORK

1( ) 299

SKILLING, HELLE, CHRISTIANSEN, ROBERTSON — Structural & Civil Engineers

PROJECT THE WORLD TRADE CENTER

TITLE GIRDER ELEVATION LINE 57

DATE 11-3-72

REVISIONS

RELEASE FOR CONSTRUCTION 11-20-72

12-11-72

4-20-73

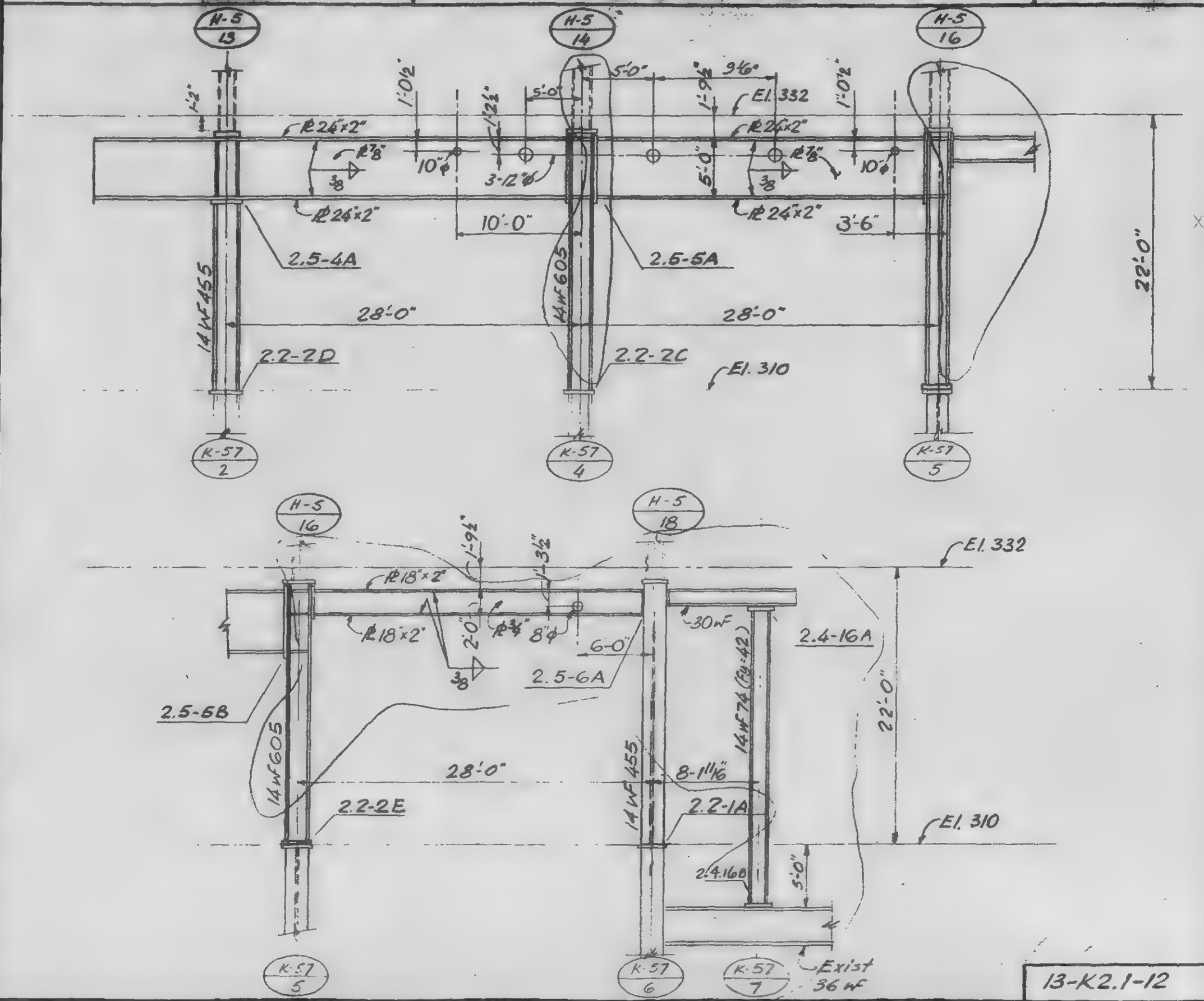

LICENSED PROFESSIONAL ENGINEER — LESLIE E. ROBERTSON — No. 34360 — UNIVERSITY OF THE STATE OF NEW YORK

DESIGNED K. Chiang

DRAWN John Gricius

REVIEWED

13-K2.1-12

SKILLING, HELLE, CHRISTIANSEN, ROBERTSON — Structural & Civil Engineers

PROJECT: THE WORLD TRADE CENTER | TITLE: COLUMN ELEVATION | DATE: 11-3-72

REVISIONS

Released for construction 11-20-72

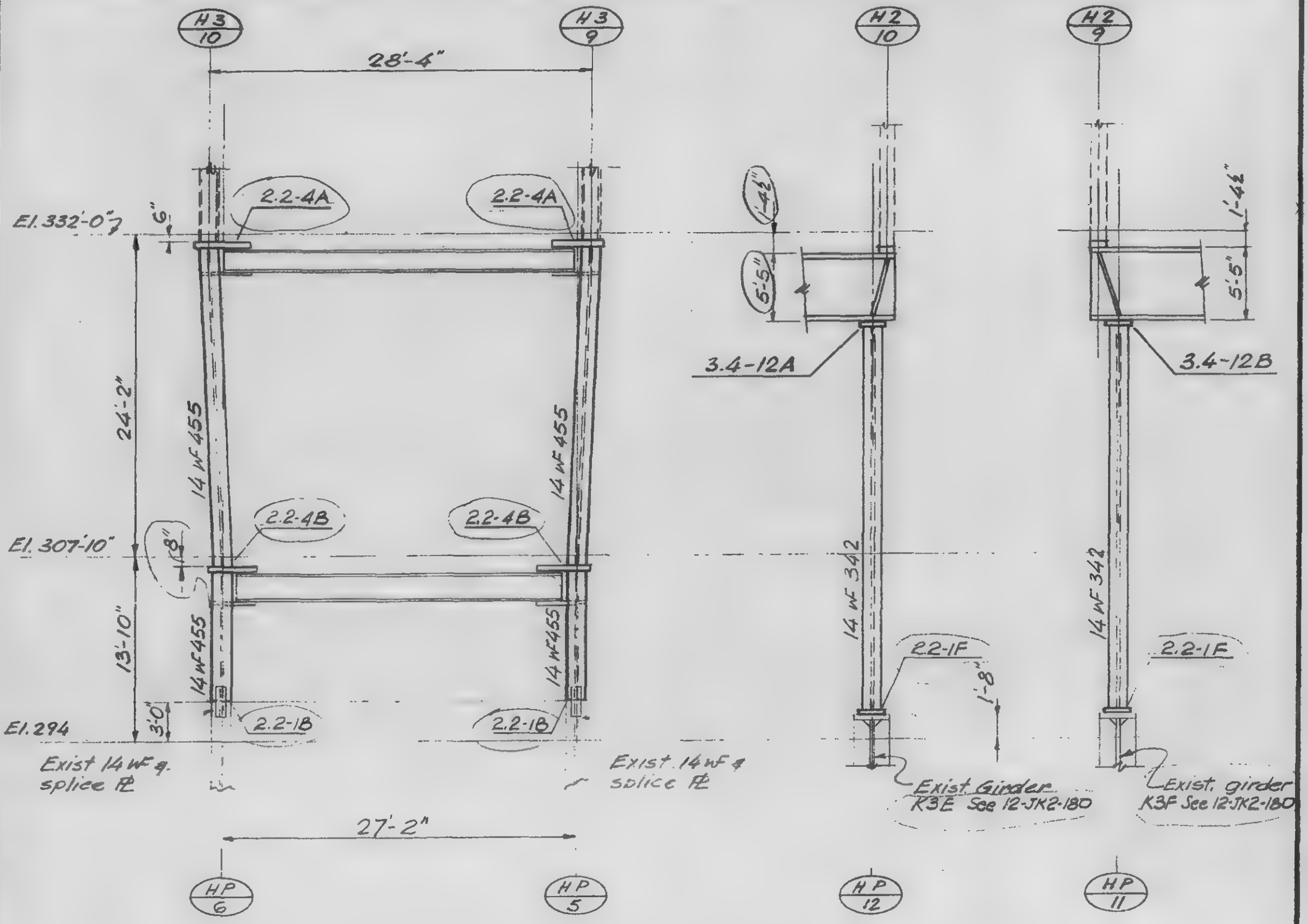

LICENSED PROFESSIONAL ENGINEER — LESLIE E. ROBERTSON — No. 34360 — UNIVERSITY OF THE STATE OF NEW YORK

DESIGNED

DRAWN

REVIEWED

13-K2.1-13

SKILLING, HELLE, CHRISTIANSEN, ROBERTSON — Structural & Civil Engineers

PROJECT THE WORLD TRADE CENTER | TITLE COLUMN ELEVATIONS | DATE 11-3-72

REVISIONS

RELEASE FOR CONSTRUCTION 11-15-72

12-11-72

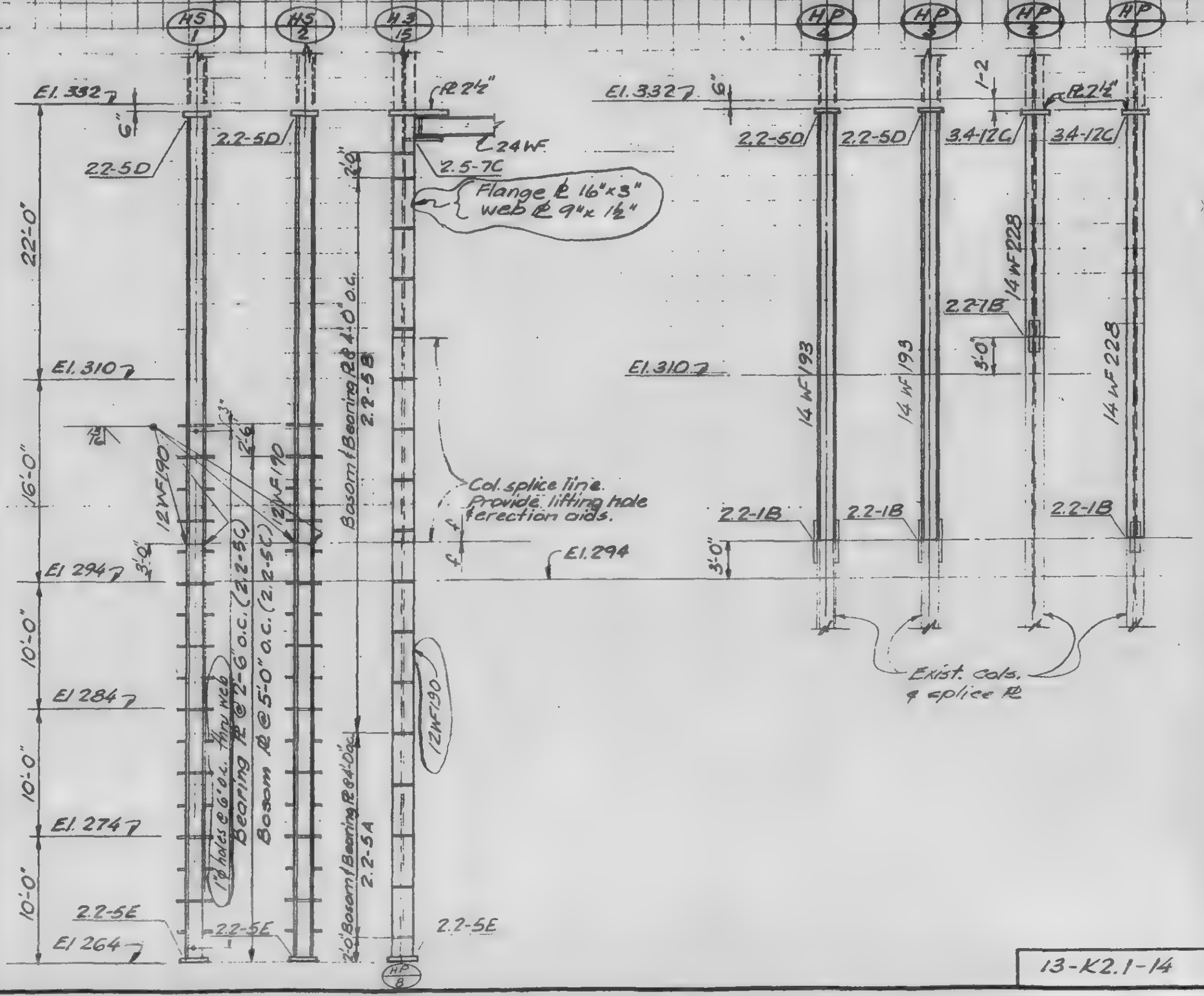

LICENSED PROFESSIONAL ENGINEER — LESLIE E. ROBERTSON — No 34360 — UNIVERSITY OF THE STATE OF NEW YORK

DESIGNED

DRAWN John Greene

REVIEWED

13-K2.1-14

SKILLING, HELLE, CHRISTIANSEN, ROBERTSON — Structural & Civil Engineers

PROJECT THE WORLD TRADE CENTER | TITLE COLUMN ELEVATION | DATE 11-3-72

REVISIONS:

Release for construction 11-20-72

12-11-72

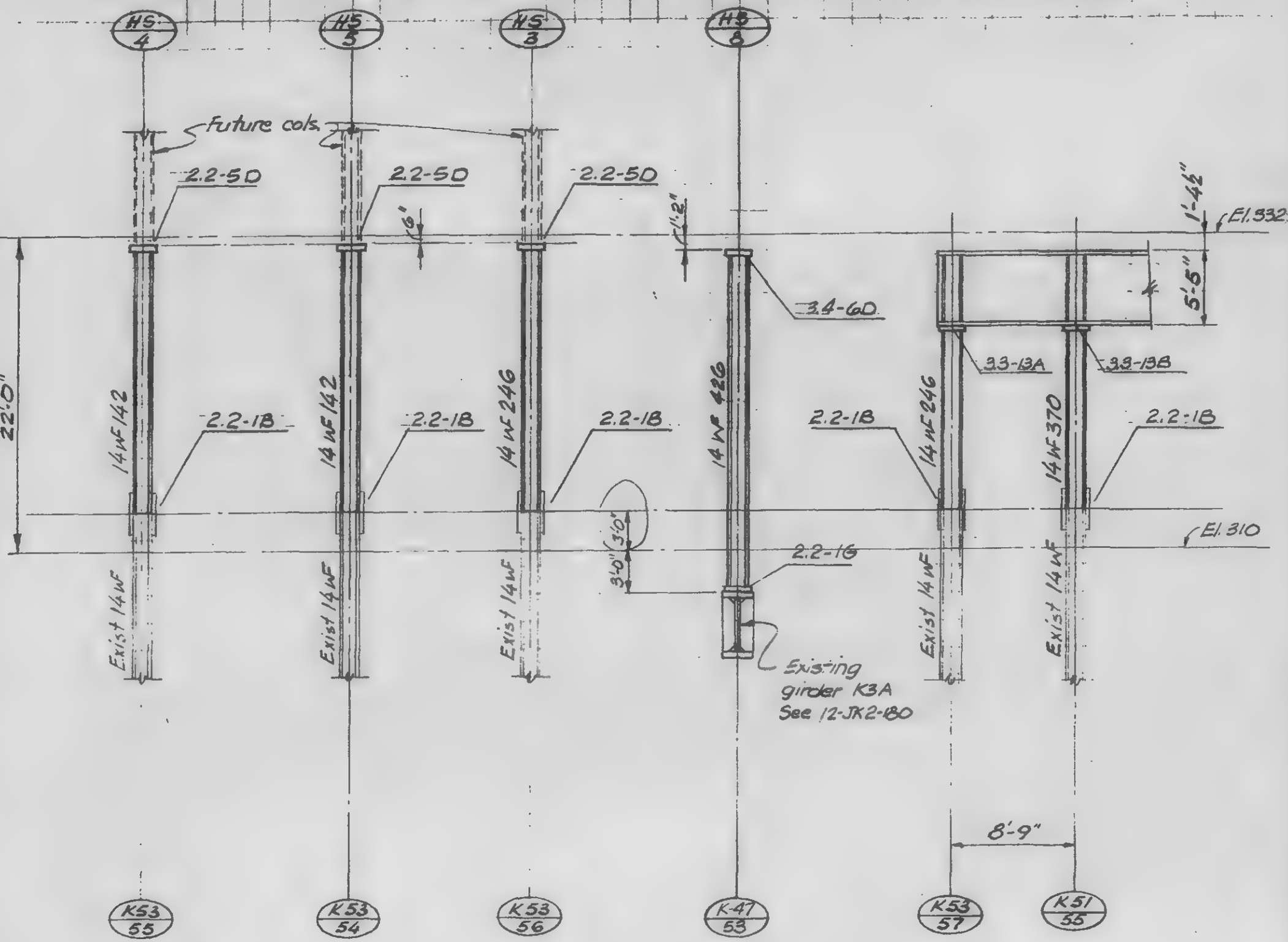

LICENSED PROFESSIONAL ENGINEER — LESLIE E. ROBERTSON — No 34360 — UNIVERSITY OF THE STATE OF NEW YORK

DRAWN John Gracias

REVIEWED

13-K2.1-15

SKILLING, HELLE, CHRISTIANSEN, ROBERTSON — Structural & Civil Engineers

PROJECT: THE WORLD TRADE CENTER | TITLE: COLUMN BASE DETAILS | DATE: 11-3-72

REVISIONS

RELEASE FOR CONSTRUCTION 11-20-72

2-5-73

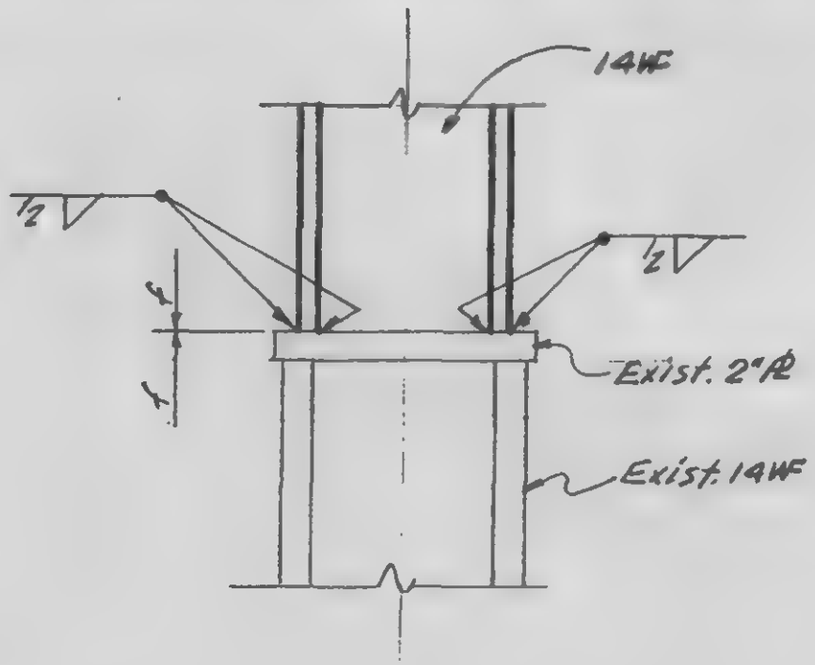

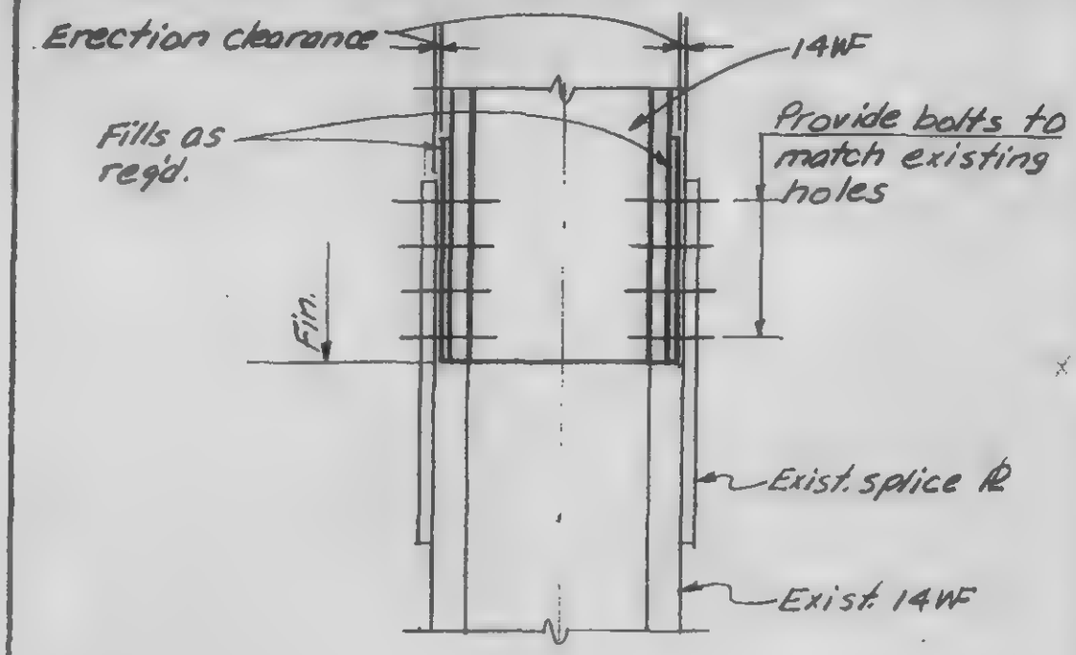

A | B

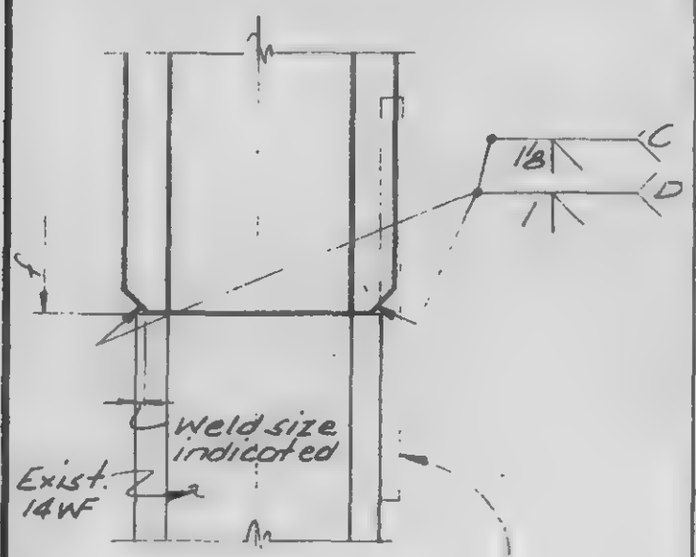

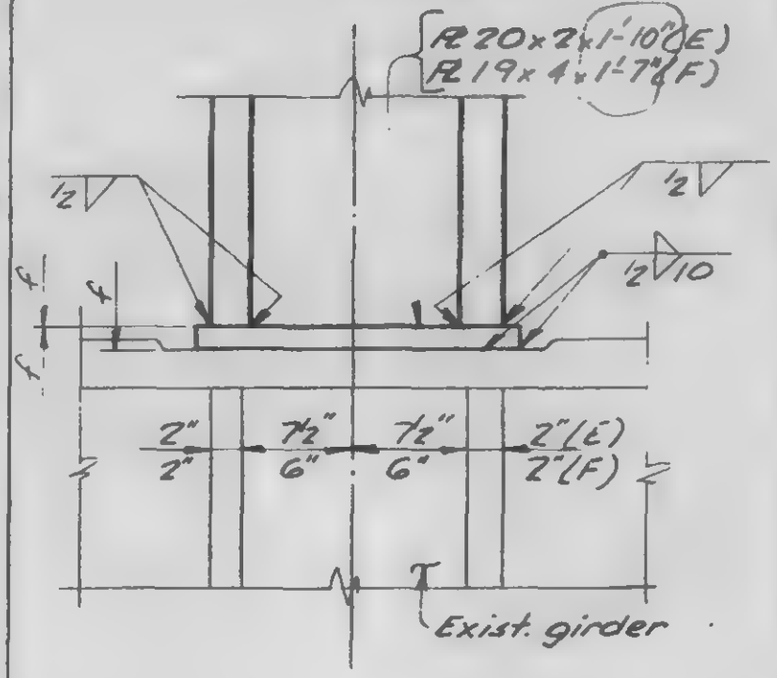

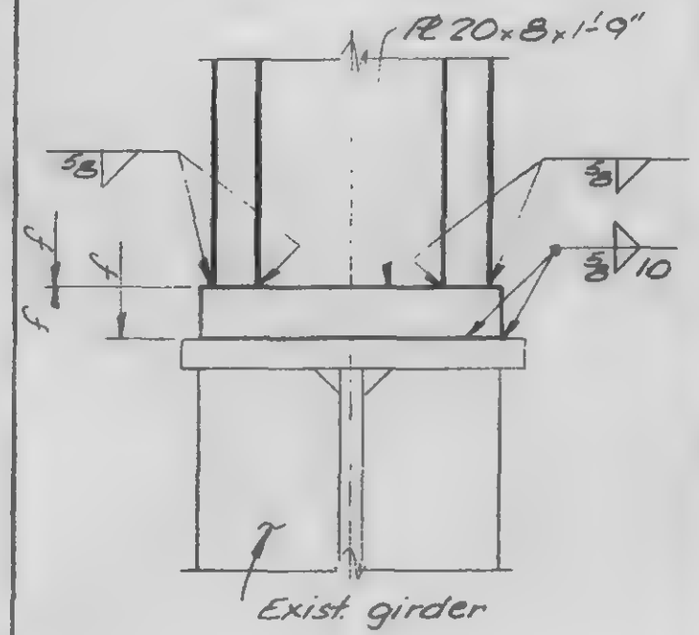

C | D | E | F | G

LICENSED PROFESSIONAL ENGINEER — LESLIE E. ROBERTSON — No 34360 — UNIVERSITY OF THE STATE OF NEW YORK

DESIGNED

A.L. Franqui

REVIEWED

13-K2.2-1

SKILLING, HELLE, CHRISTIANSEN, ROBERTSON — Structural & Civil Engineers

PROJECT: THE WORLD TRADE CENTER

TITLE: COLUMN BASE DETAILS

DATE: 11-3-72

REVISIONS

- RELEASE FOR CONSTRUCTION 11-20-72

2-5-73

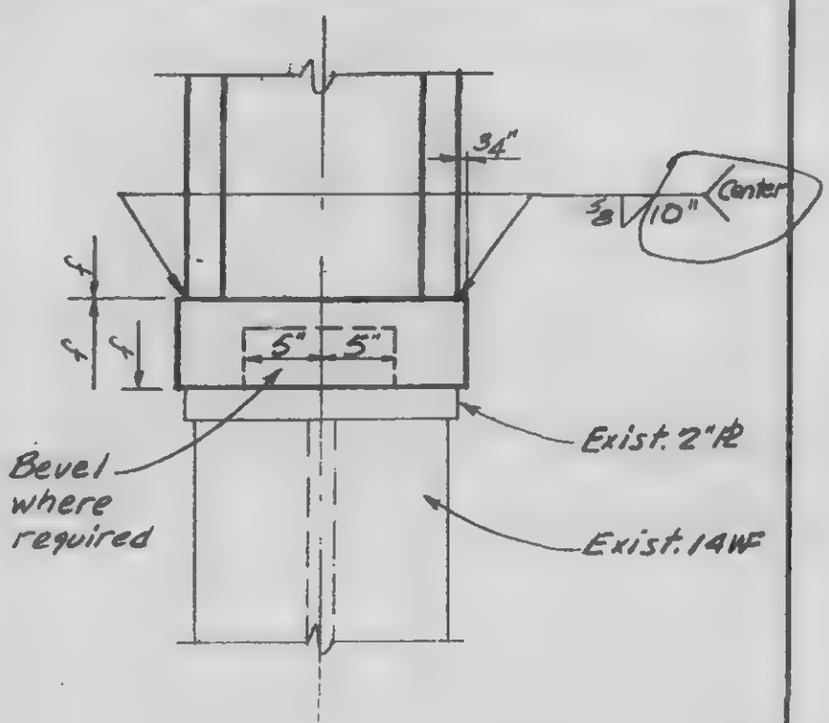

a

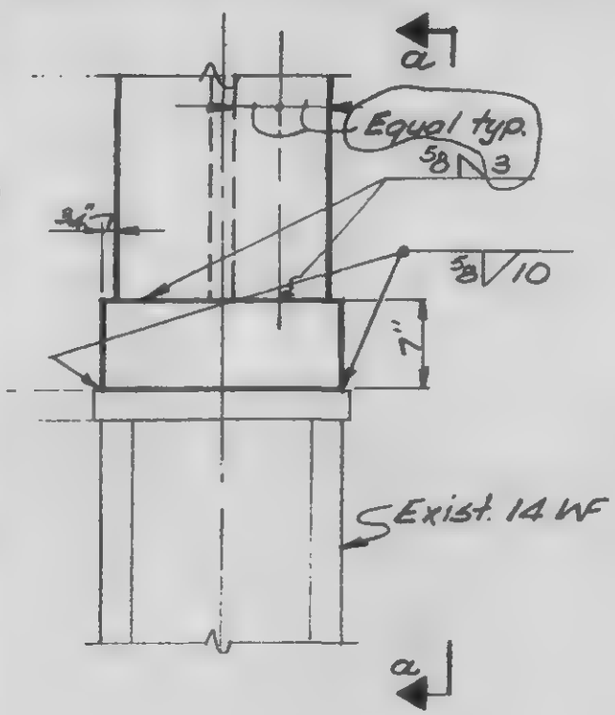

E

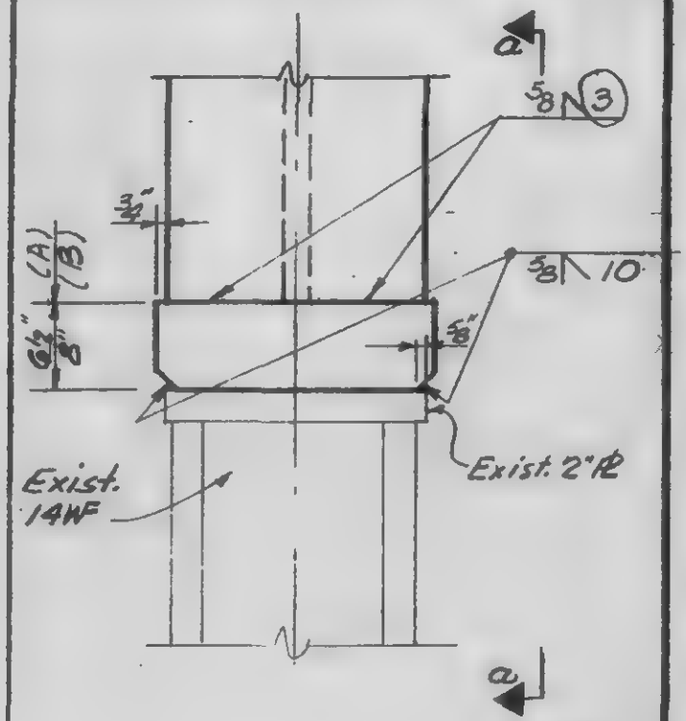

A
B

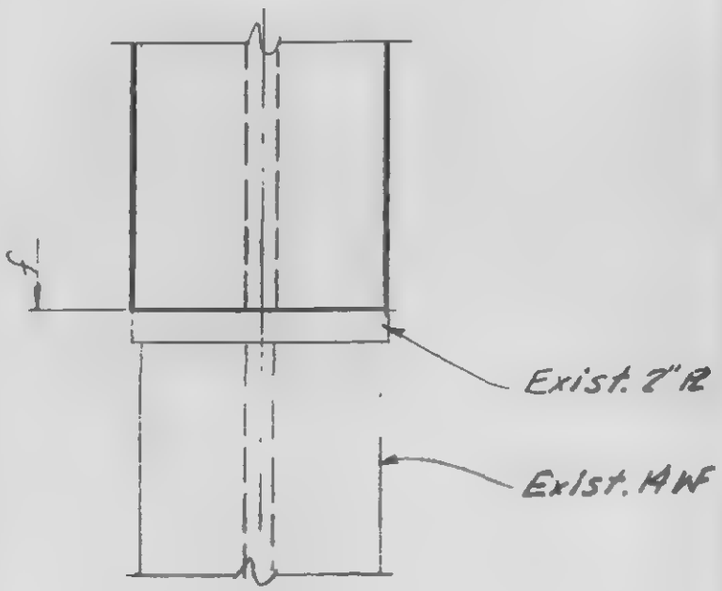

c

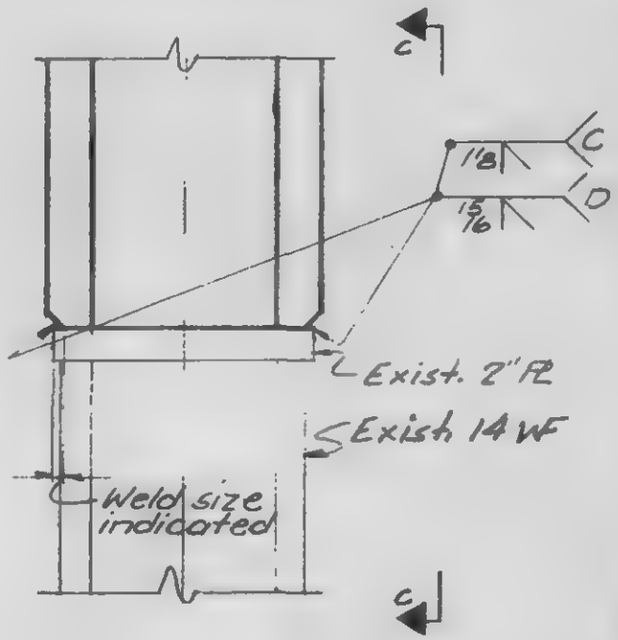

C
D

LICENSED PROFESSIONAL ENGINEER — LESLIE E. ROBERTSON — No 34360 — UNIVERSITY OF THE STATE OF NEW YORK

DESIGNED

DRAWN: A.L. Frongui'

REVIEWED

13-K2.2-2

SKILLING, HELLE, CHRISTIANSEN, ROBERTSON — Structural & Civil Engineers

PROJECT: THE WORLD TRADE CENTER — TITLE: COLUMN BASE DETAILS — DATE: 11-3-72

REVISIONS

RELEASE FOR CONSTRUCTION 11-20-72

2-5-73

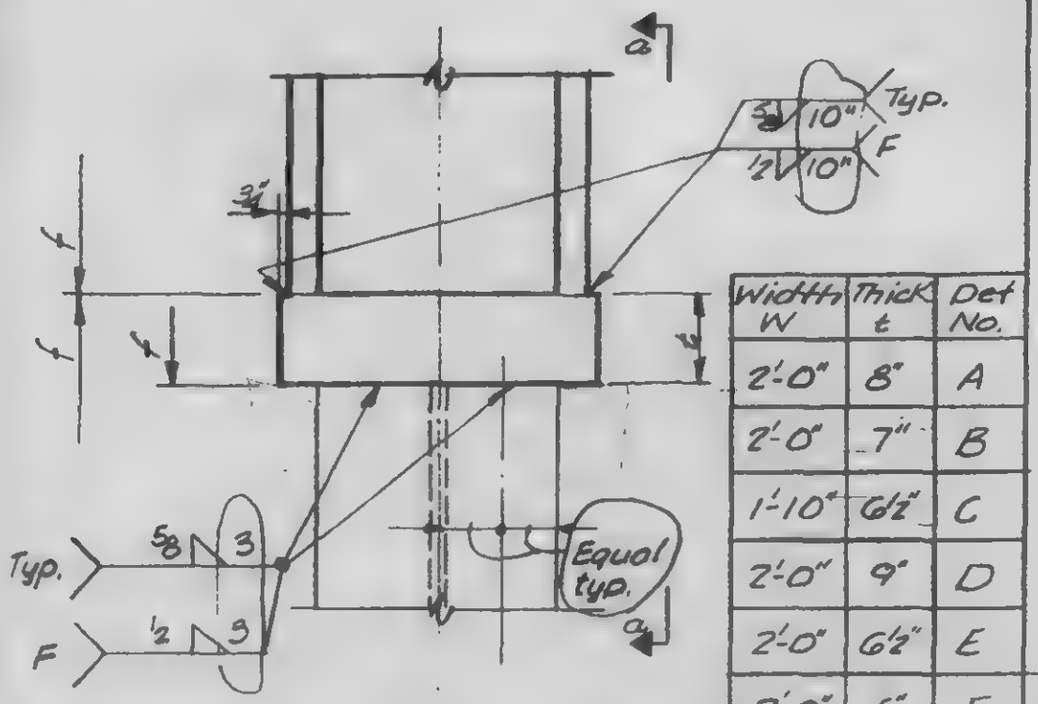

Width W	Thick t	Det No.	
2'-0"	8"	A	
2'-0"	7"	B	
1'-10"	6½"	C	
2'-0"	9"	D	
2'-0"	6½"	E	
2'-0"	5"	F	a

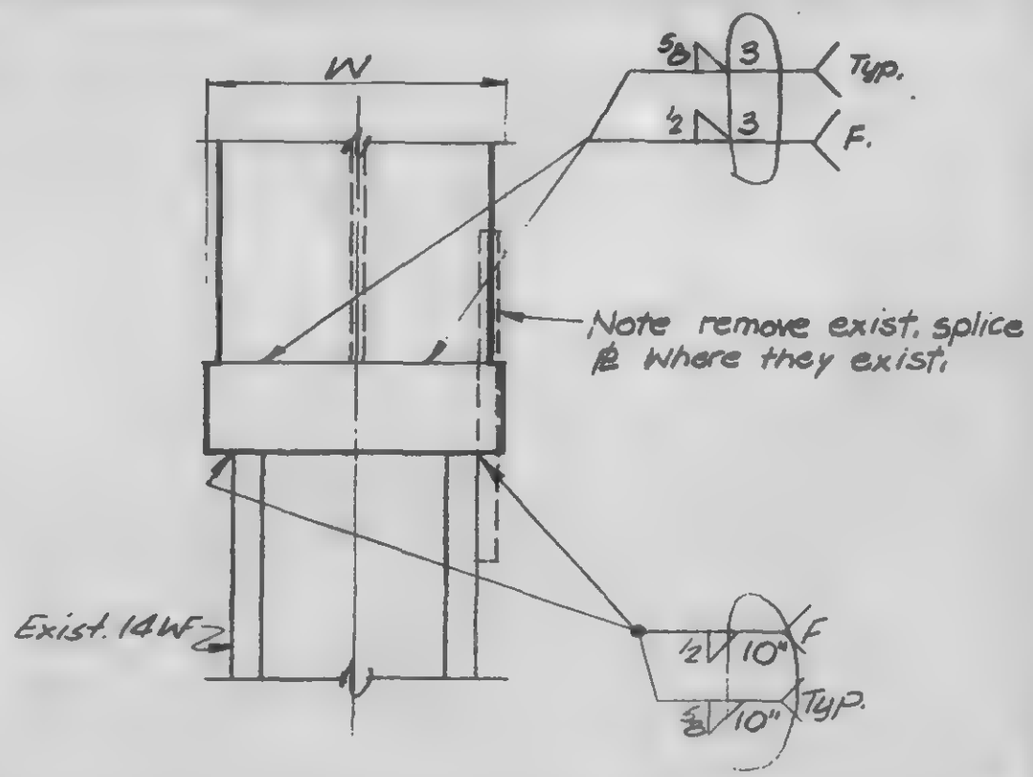

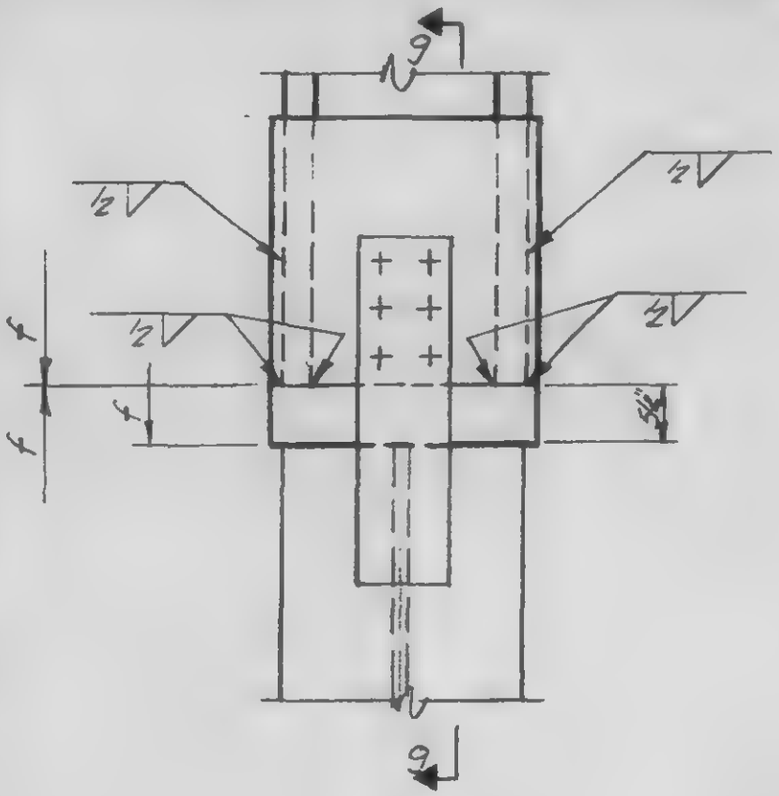

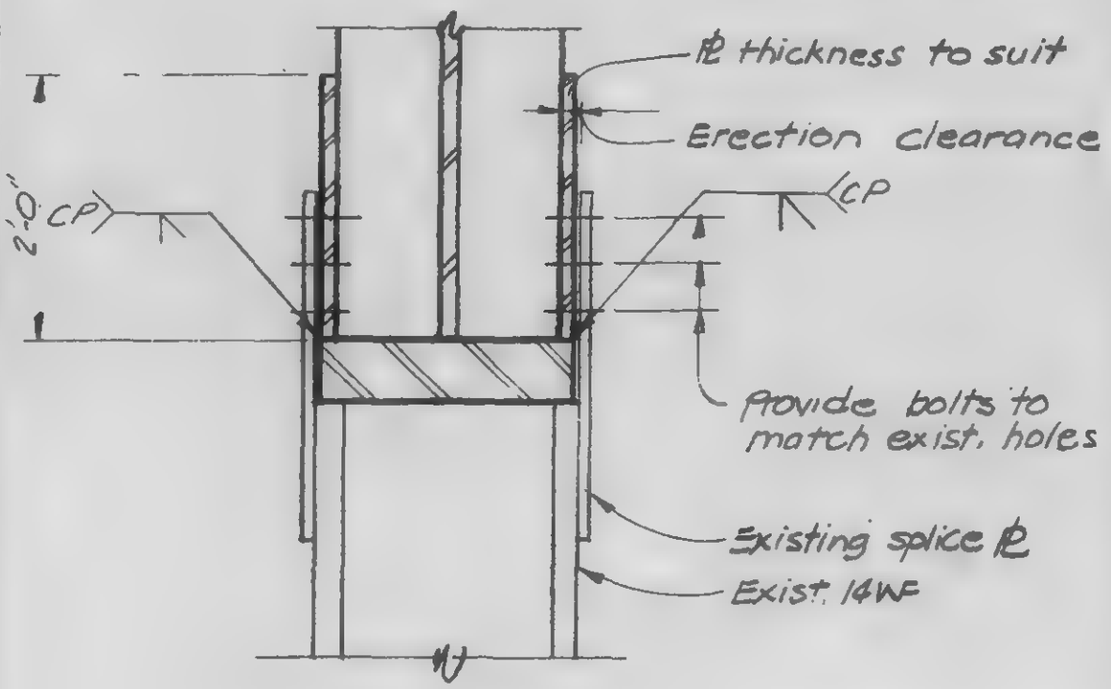

LICENSED PROFESSIONAL ENGINEER LESLIE E. ROBERTSON No 34360 UNIVERSITY OF THE STATE OF NEW YORK

DESIGNED

DRAWN

REVIEWED

G 9

13-K2.2.3

SKILLING, HELLE, CHRISTIANSEN, ROBERTSON — Structural & Civil Engineers

PROJECT THE WORLD TRADE CENTER | TITLE COLUMN DETAILS | DATE 11-20-72

REVISIONS

RELEASE FOR CONSTRUCTION 11-20-72

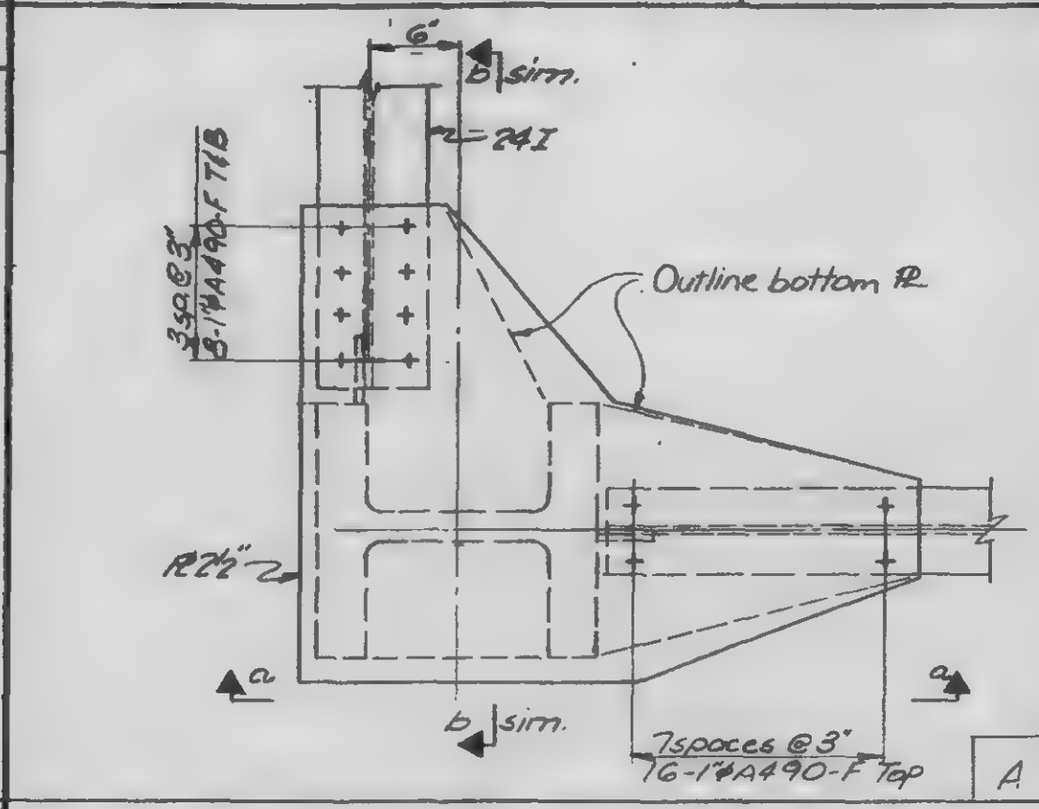

A | a

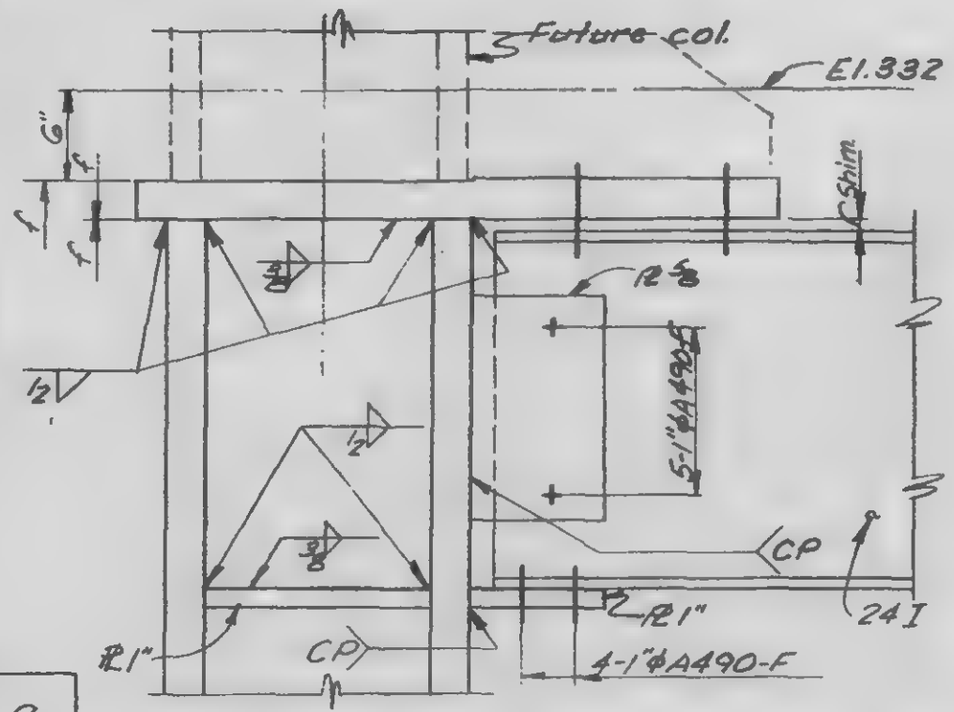

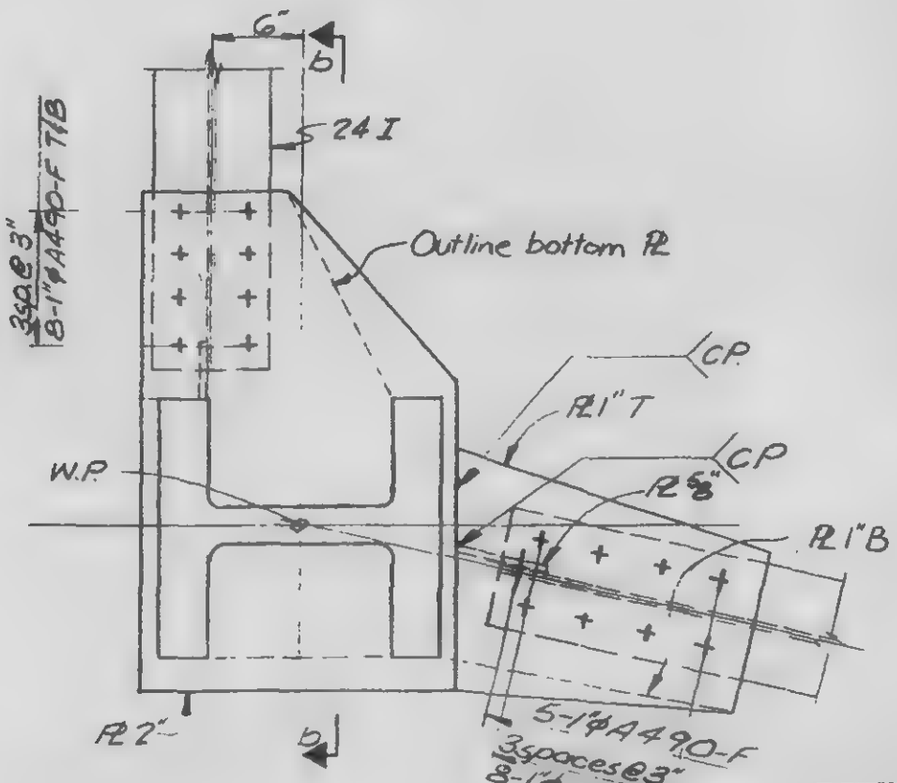

B | b

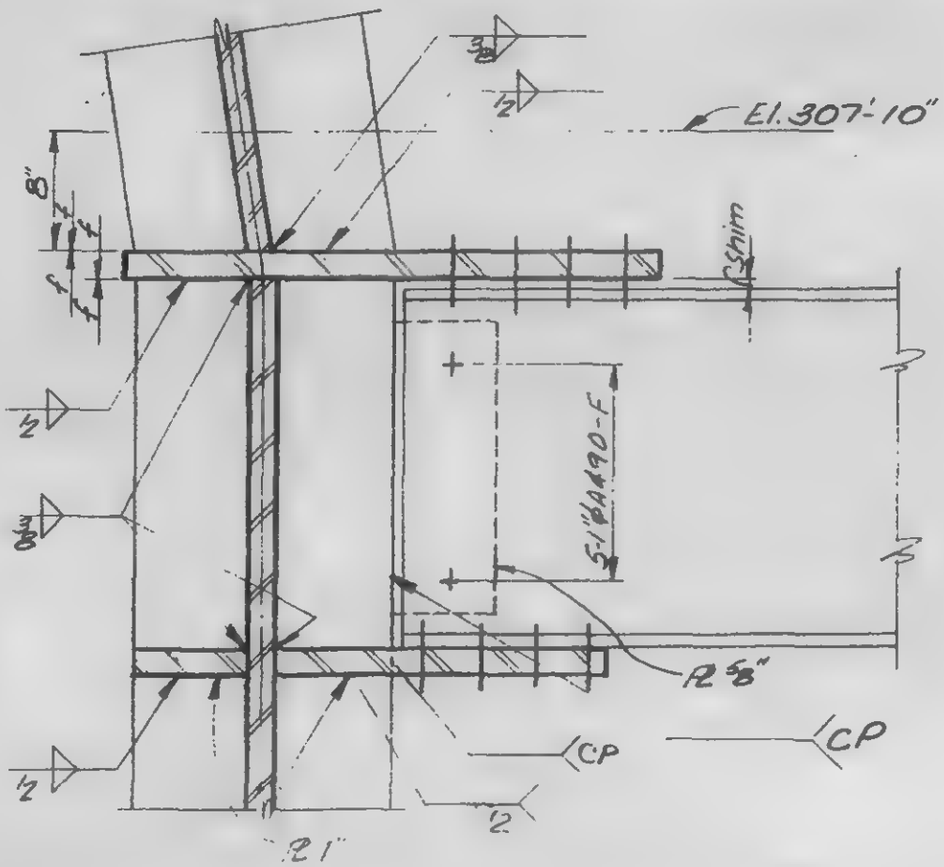

13-K2.2-4

LICENSED PROFESSIONAL ENGINEER
LESLIE E. ROBERTSON
No 34360
UNIVERSITY OF THE STATE OF NEW YORK

DESIGNED

DRAWN TR

REVIEWED

SKILLING, HELLE, CHRISTIANSEN, ROBERTSON — Structural & Civil Engineers

PROJECT: THE WORLD TRADE CENTER | TITLE: COLUMN BASE DETAILS | DATE: 11-3-72

REVISIONS

- RELEASE FOR CONSTRUCTION 11-15-72
- 12-11-72

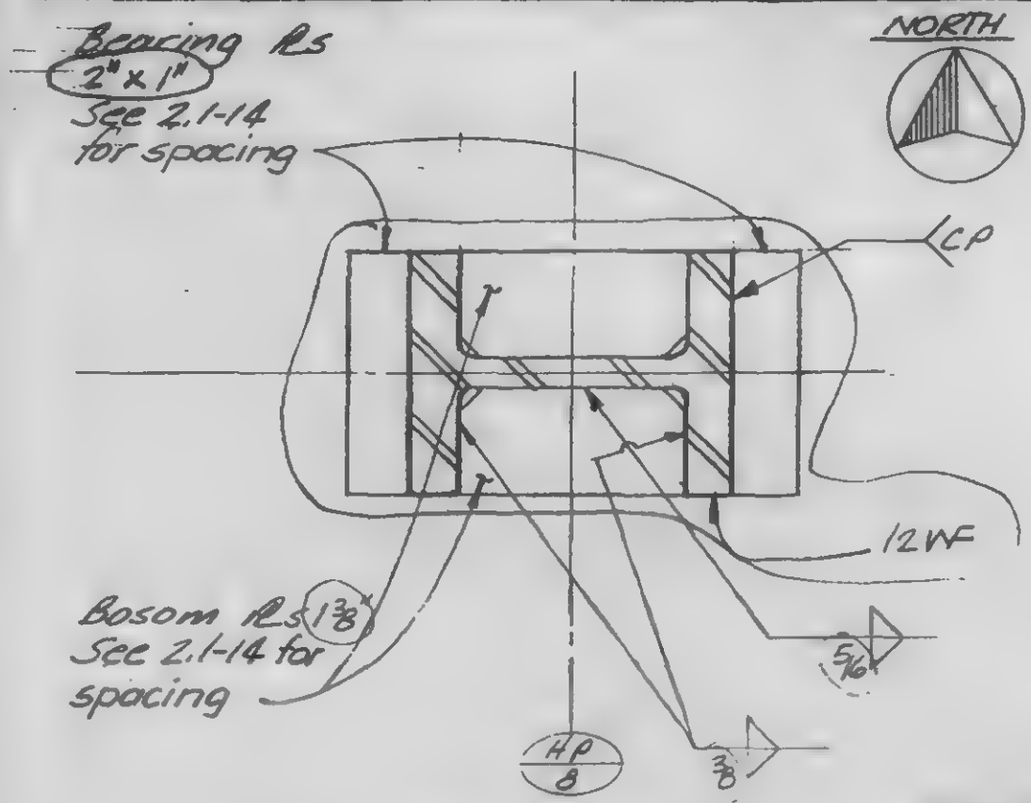

A

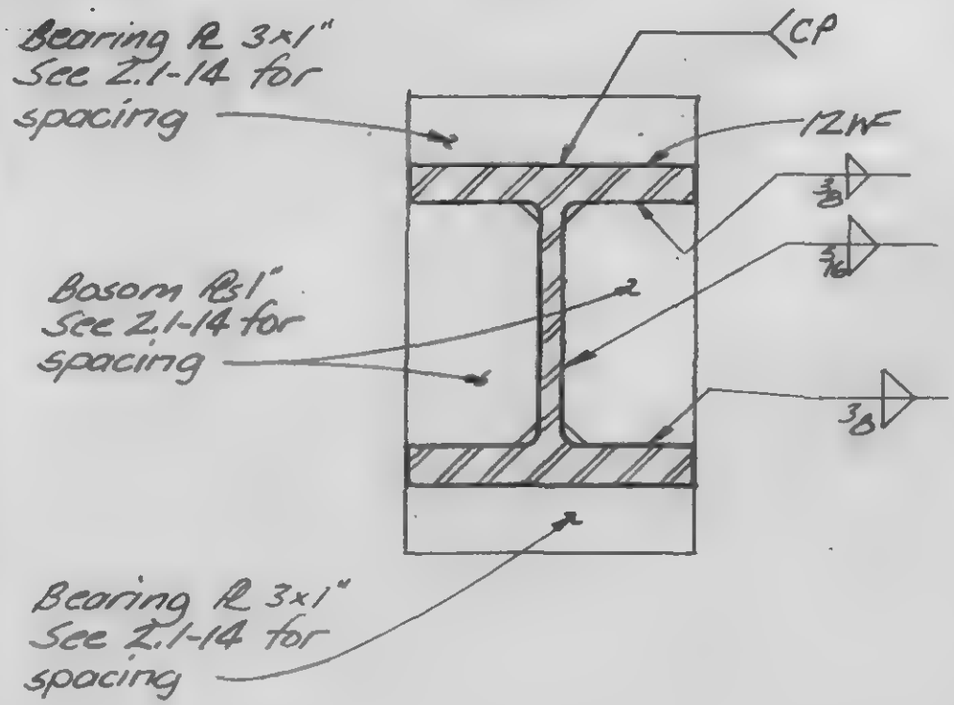

C

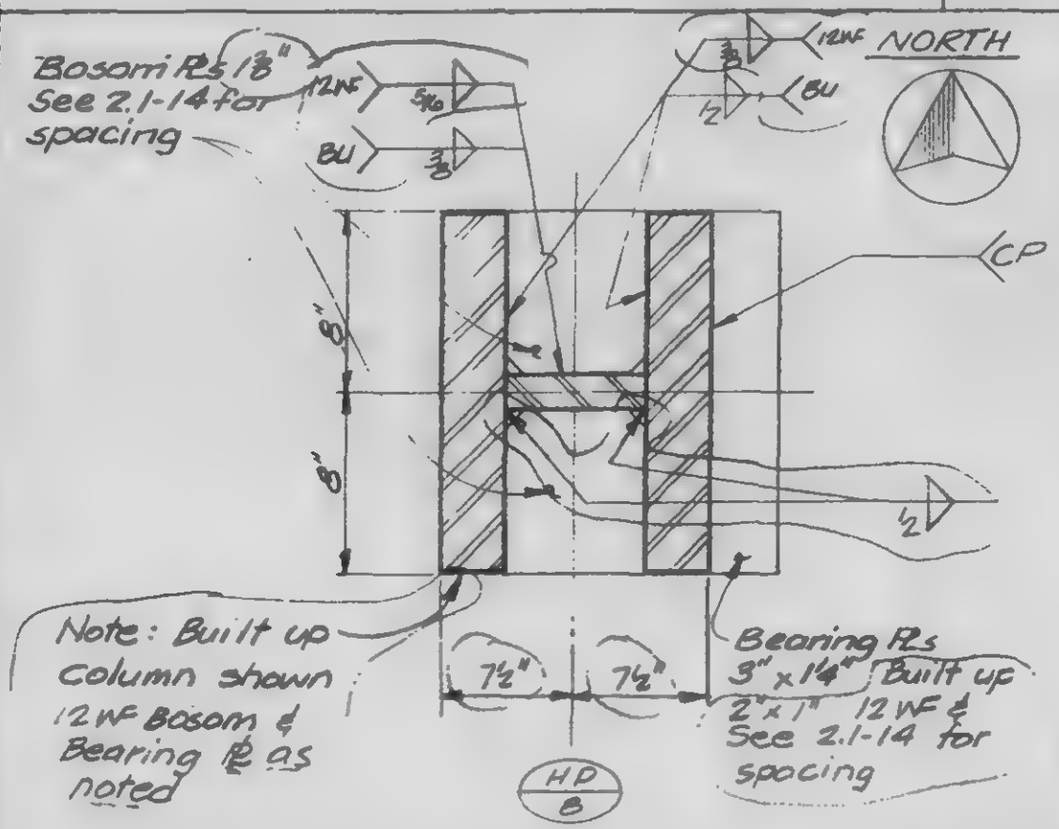

B

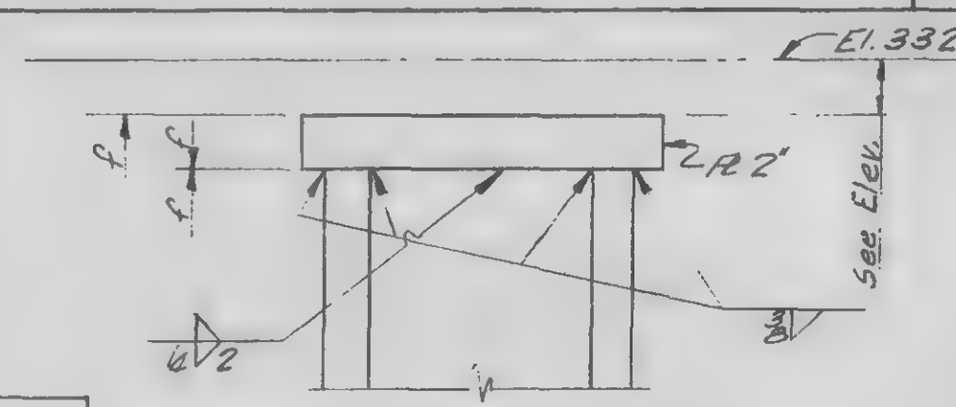

D

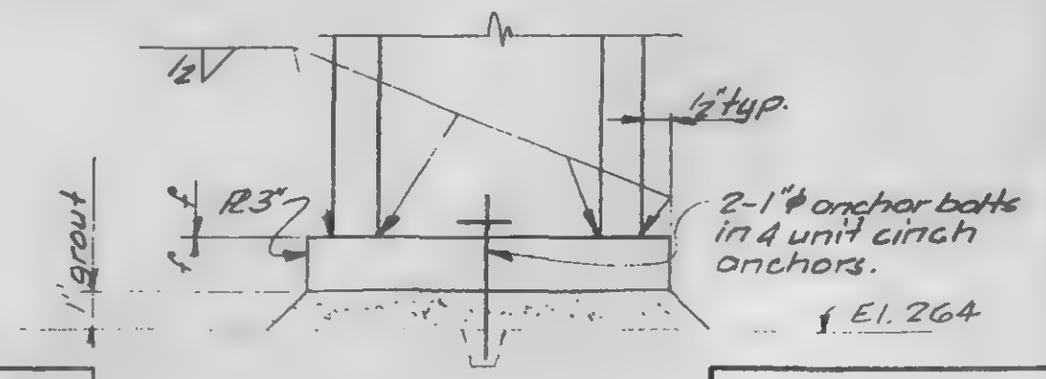

E

LICENSED PROFESSIONAL ENGINEER — LESLIE E. ROBERTSON — No. 24360 — UNIVERSITY OF THE STATE OF NEW YORK

DESIGNED

DRAWN

REVIEWED

13-KZ.2-5

SKILLING, HELLE, CHRISTIANSEN, ROBERTSON — Structural & Civil Engineers

PROJECT: THE WORLD TRADE CENTER | TITLE: TYPICAL GIRDER DETAILS | DATE: 11-3-72

REVISIONS

RELEASE FOR CONSTRUCTION 11-20-72

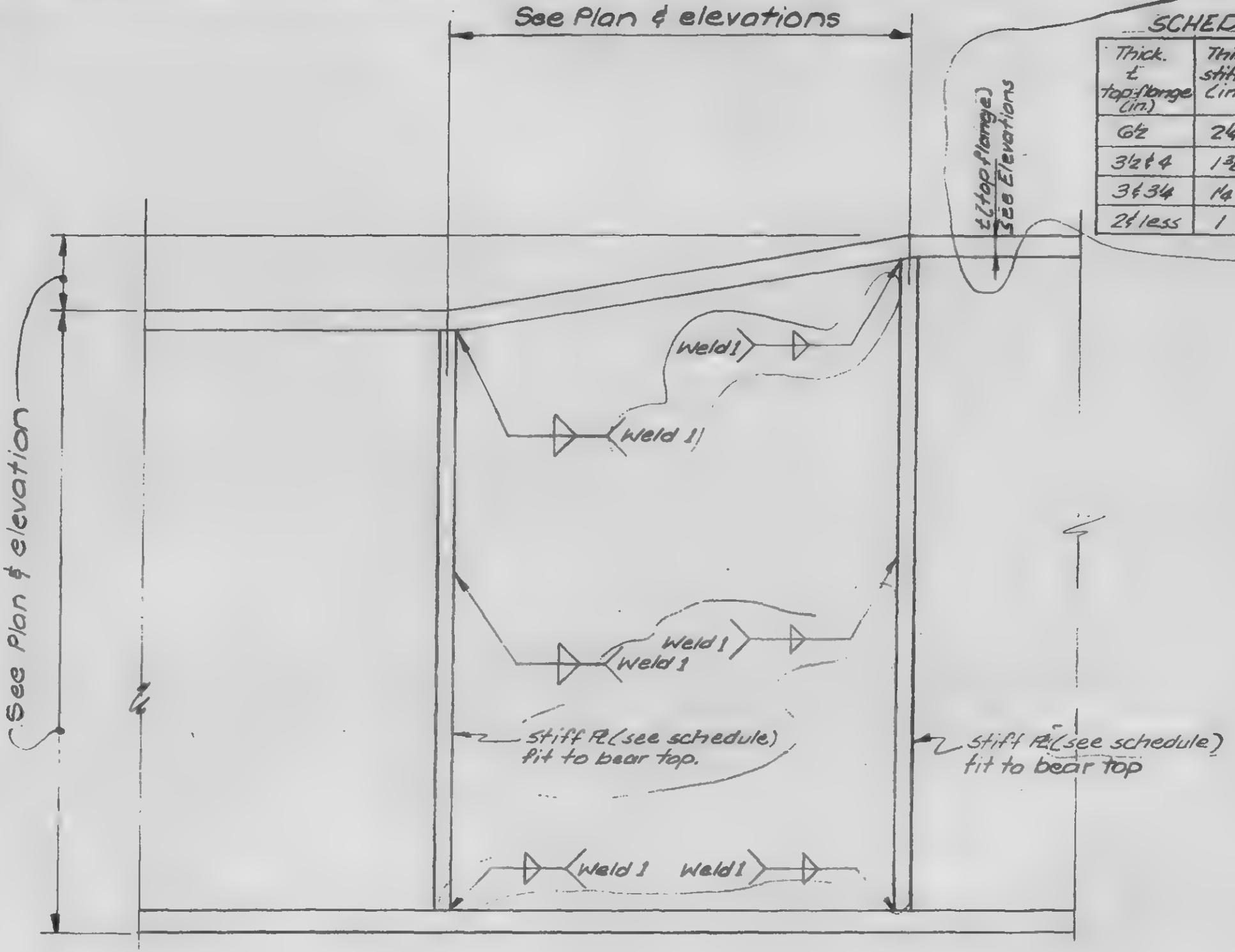

SCHEDULE

Thick. ℄ top flange (in.)	Thick. stiff PL (in.)	Weld 1
6½	2¼	⅝
3½ ℄ 4	1⅜	½
3 ℄ 3¼	1¼	½
2 ℄ less	1	⅜

LICENSED PROFESSIONAL ENGINEER — LESLIE E. ROBERTSON — NO 34360 — UNIVERSITY OF THE STATE OF NEW YORK

DESIGNED

DRAWN

REVIEWED

3-K2.3-1

SKILLING, HELLE, CHRISTIANSEN, ROBERTSON — Structural & Civil Engineers

PROJECT: THE WORLD TRADE CENTER

TITLE: GIRDER TO COLUMN CONNECTION TYPICAL AT END PLATE

DATE: 11-20-72

REVISIONS

RELEASE FOR CONSTRUCTION 11-20-72

12-11-72

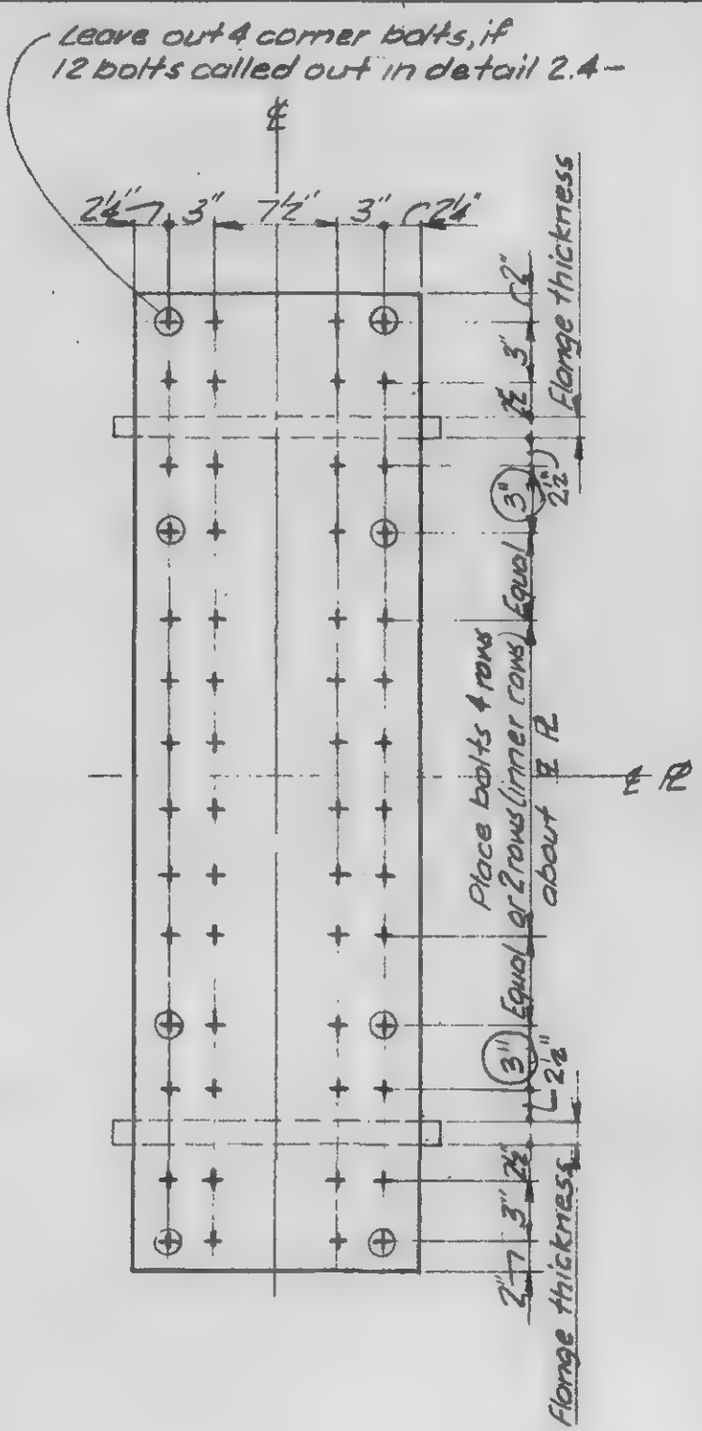

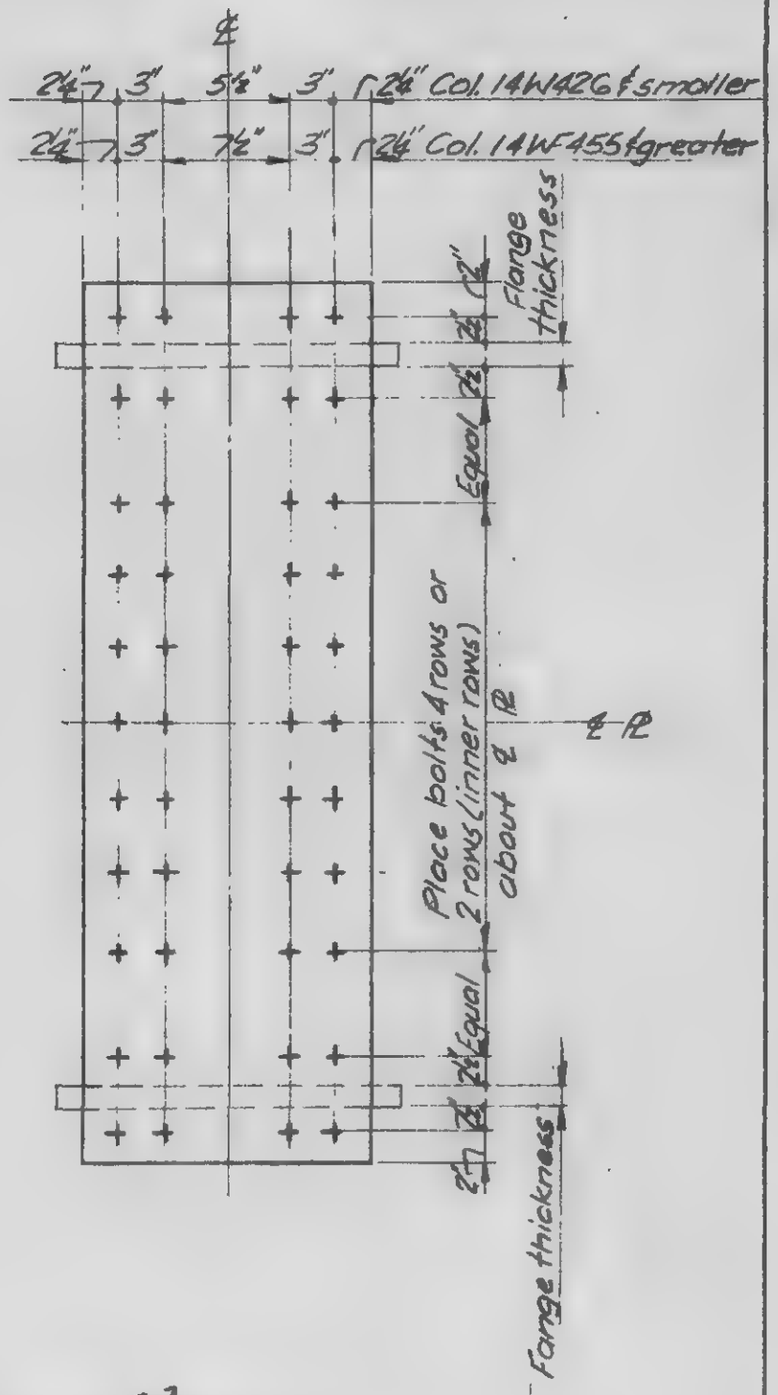

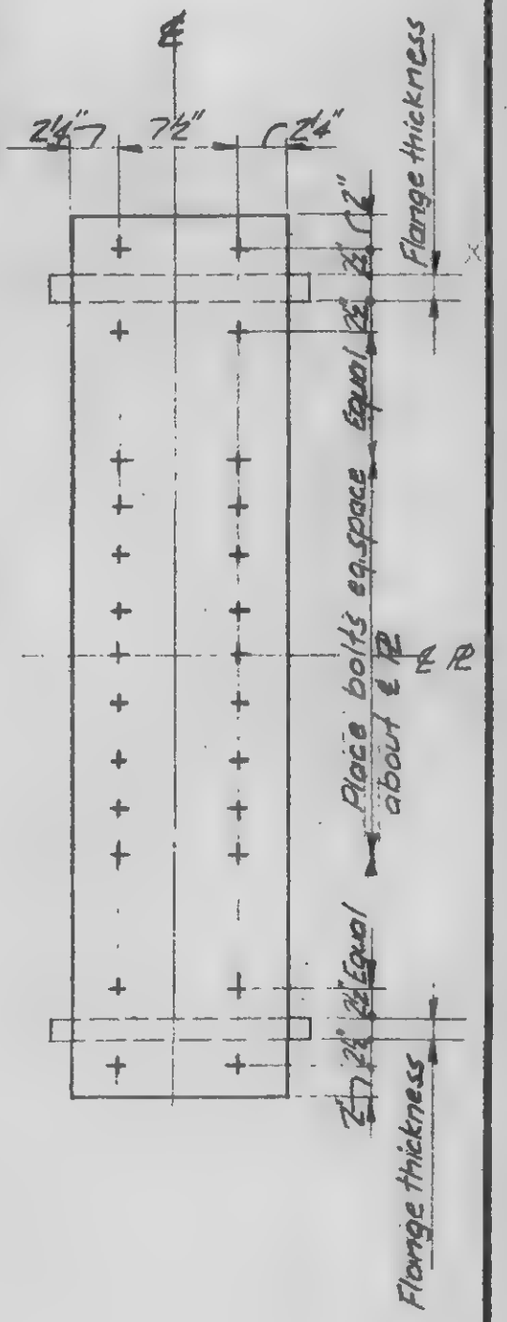

2.3

Notes to 2.4 Details

1. See specific 2.4 Details for number of bolts.
2. All bolts of 2.4 Details to be A490 X, unless otherwise noted.

LICENSED PROFESSIONAL ENGINEER — LESLIE E. ROBERTSON — No 34360 — UNIVERSITY OF THE STATE OF NEW YORK

SIGNED

DRAWN TR

REVIEWED

A B C

13-K2.3-2

SKILLING, HELLE, CHRISTIANSEN, ROBERTSON — Structural & Civil Engineers

PROJECT: THE WORLD TRADE CENTER

TITLE: GIRDER TO COLUMN CONNECTION TYPICAL AT END PLATE

DATE: 11-20-72

REVISIONS

RELEASE FOR CONSTRUCTION 11-20-72

12-11-72

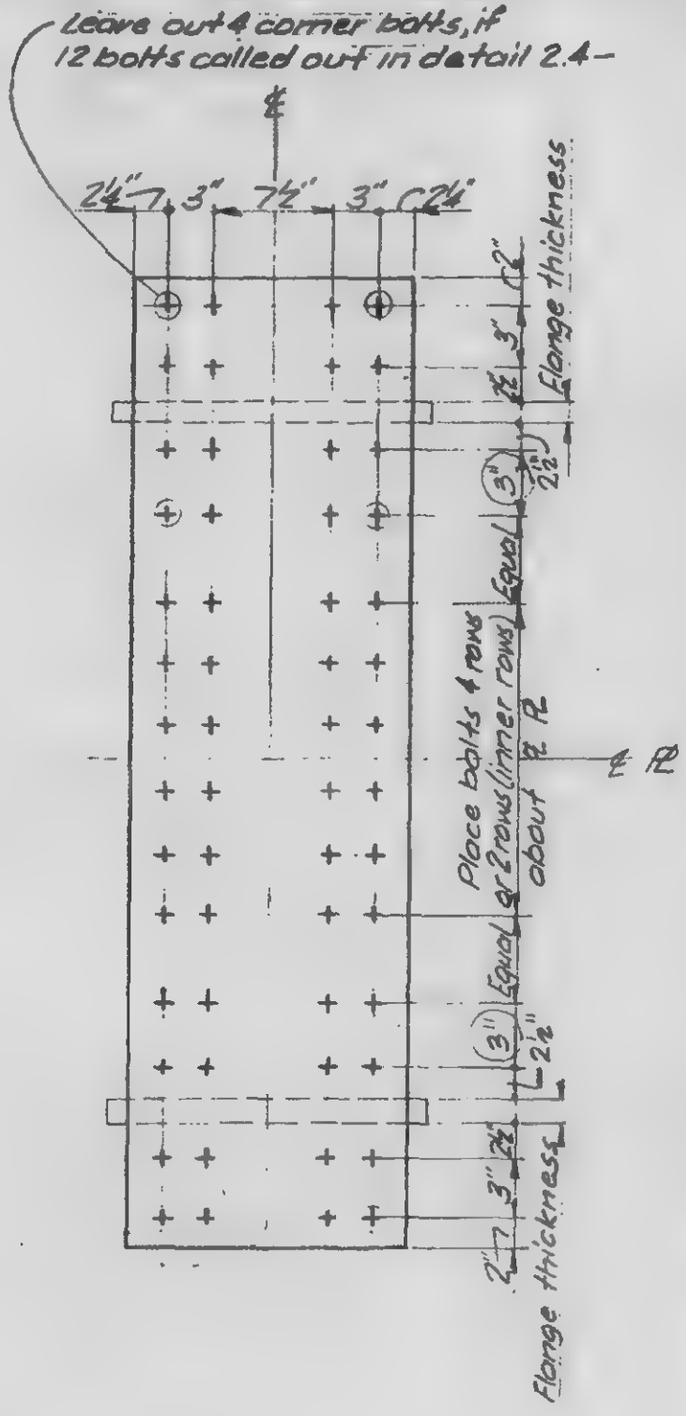

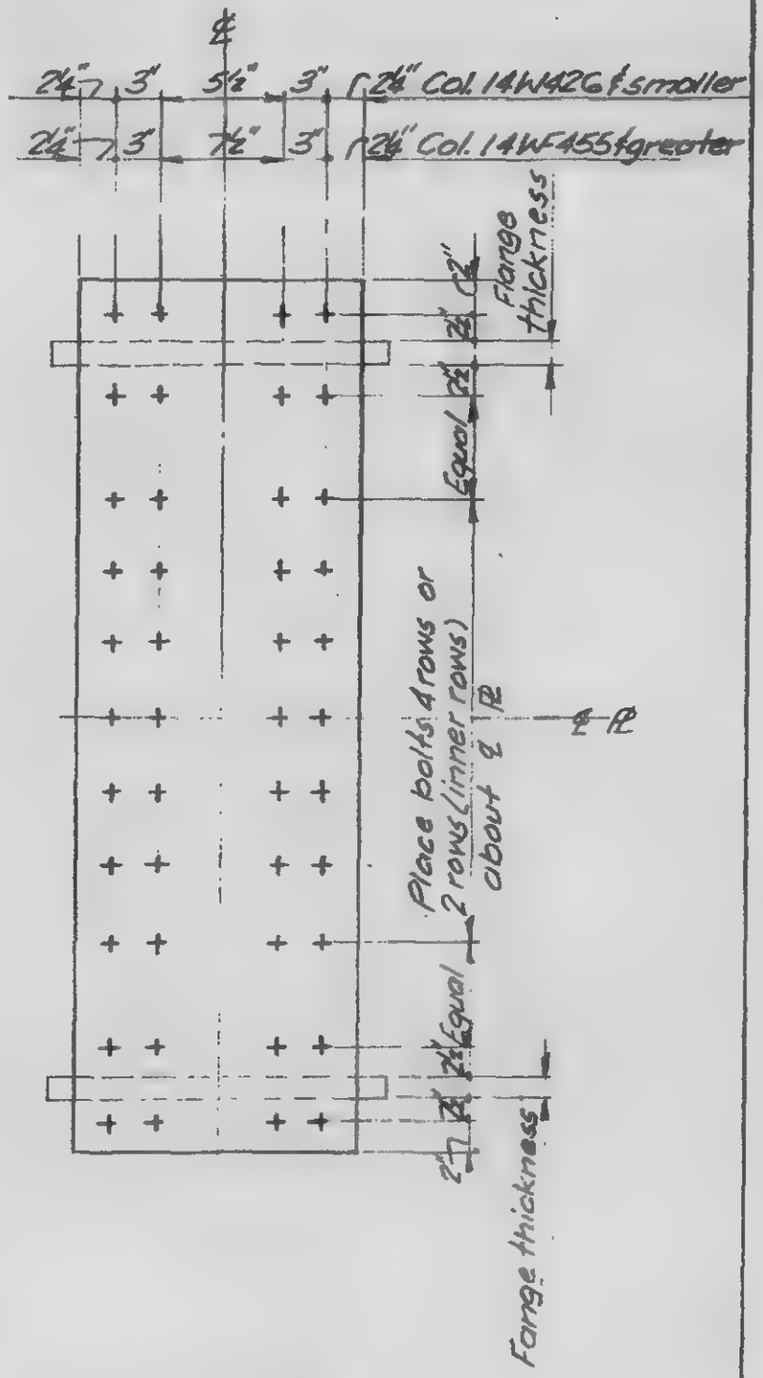

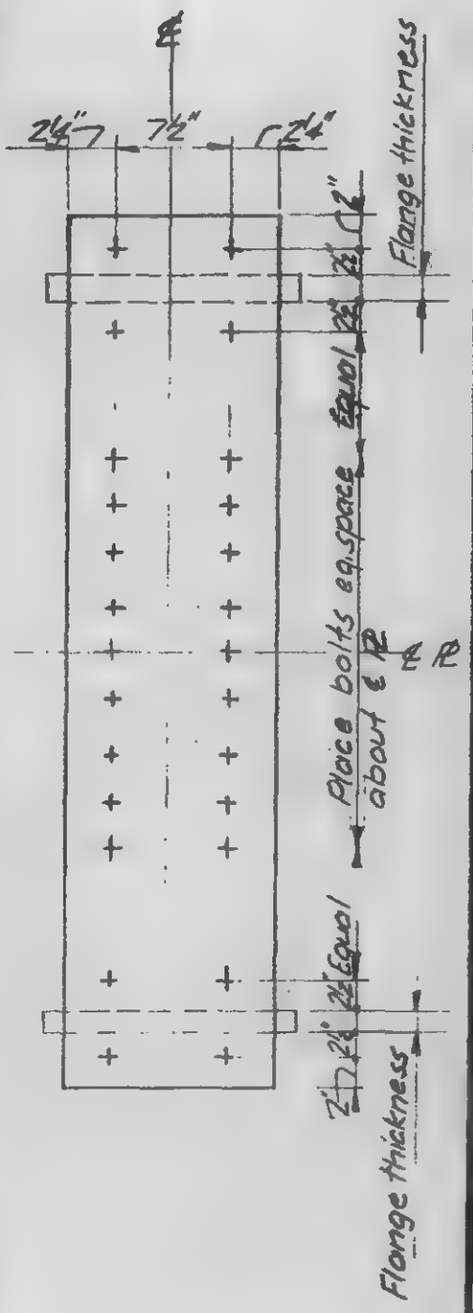

Notes to 2.4 Details

1. See specific 2.4 Details for number of bolts.
2. All bolts of 2.4 Details to be A490 X, unless otherwise noted.

LICENSED PROFESSIONAL ENGINEER — LESLIE E. ROBERTSON — No 34960 — UNIVERSITY OF THE STATE OF NEW YORK

DESIGNED

DRAWN TR

REVIEWED

A | B | C

13-K2.3-2

SKILLING, HELLE, CHRISTIANSEN, ROBERTSON — Structural & Civil Engineers

PROJECT THE WORLD TRADE CENTER | TITLE GIRDER FLANGE SPLICES - TYPICAL DETAILS | DATE 6-4-73

REVISIONS

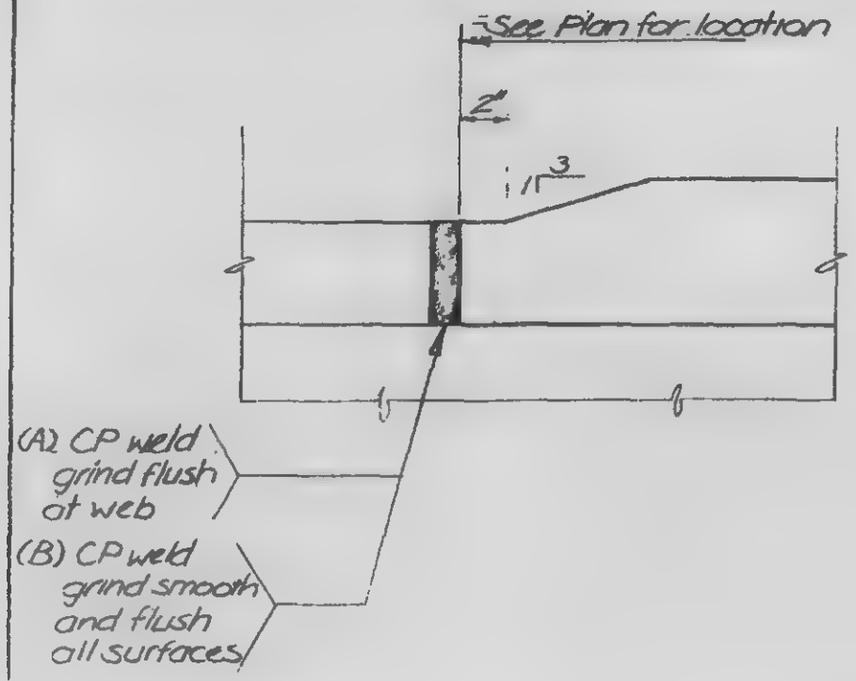

	A
Upside down	B

LICENSED PROFESSIONAL ENGINEER
LESLIE E. ROBERTSON
No 34360
UNIVERSITY OF THE STATE OF NEW YORK

DESIGNED

DRAWN

REVIEWED WOP

13-K2.3-3

SKILLING, HELLE, CHRISTIANSEN, ROBERTSON — Structural & Civil Engineers

PROJECT: THE WORLD TRADE CENTER | TITLE: GIRDER COLUMN DETAILS | DATE: 11-3-72

REVISIONS

General Revision Released for construction 11-20-72

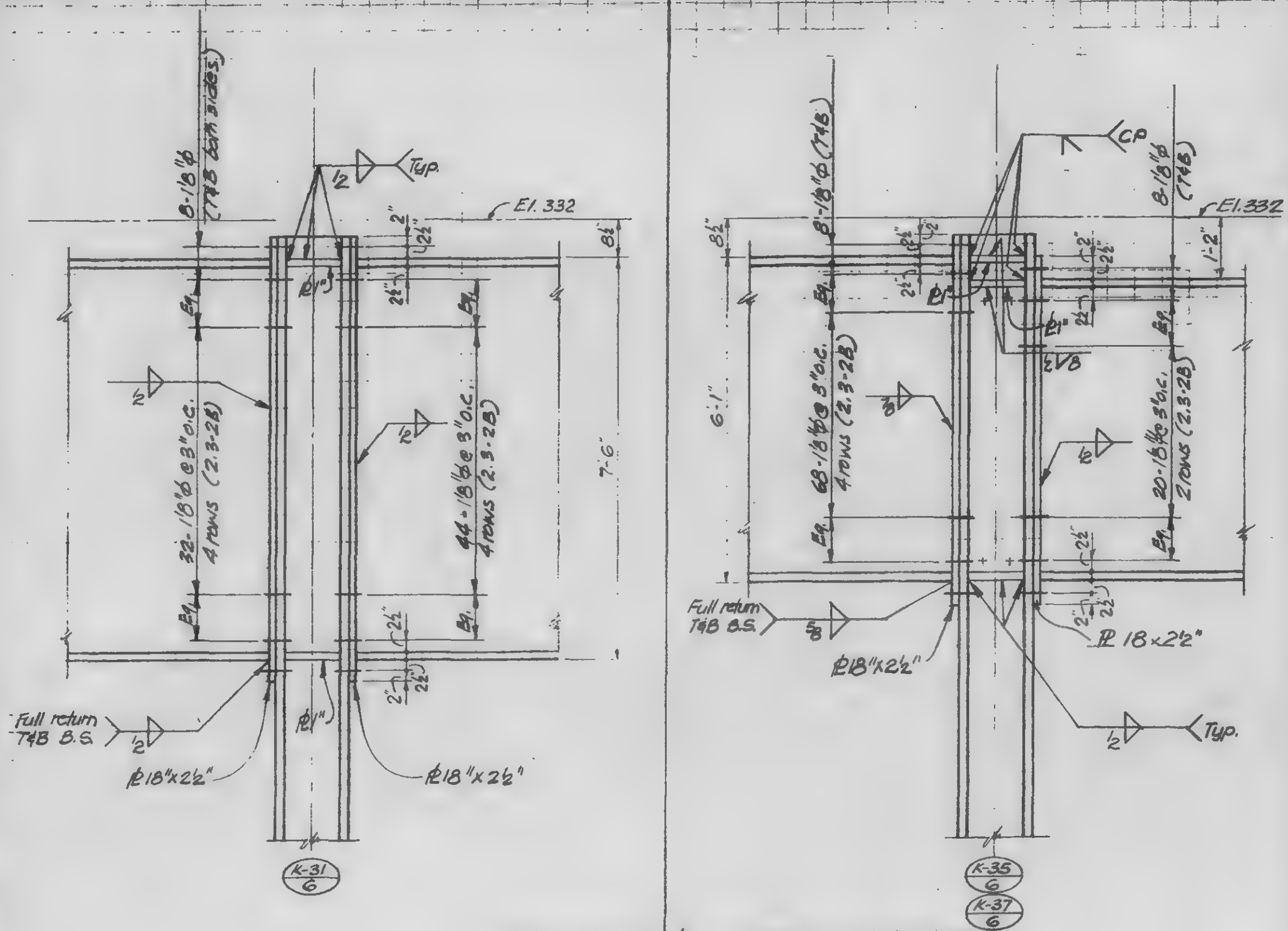

Note: All bolts to be A490x on this sheet.

LICENSED PROFESSIONAL ENGINEER — LESLIE E. ROBERTSON — No. 34360 — UNIVERSITY OF THE STATE OF NEW YORK

DESIGNED

DRAWN John Gricius

REVIEWED

A | B

13-K2.4-1

SKILLING, HELLE, CHRISTIANSEN, ROBERTSON — Structural & Civil Engineers

PROJECT: THE WORLD TRADE CENTER

TITLE: GIRDER COLUMN DETAILS

DATE: 11-3-72

REVISIONS

Released for construction 11-20-72

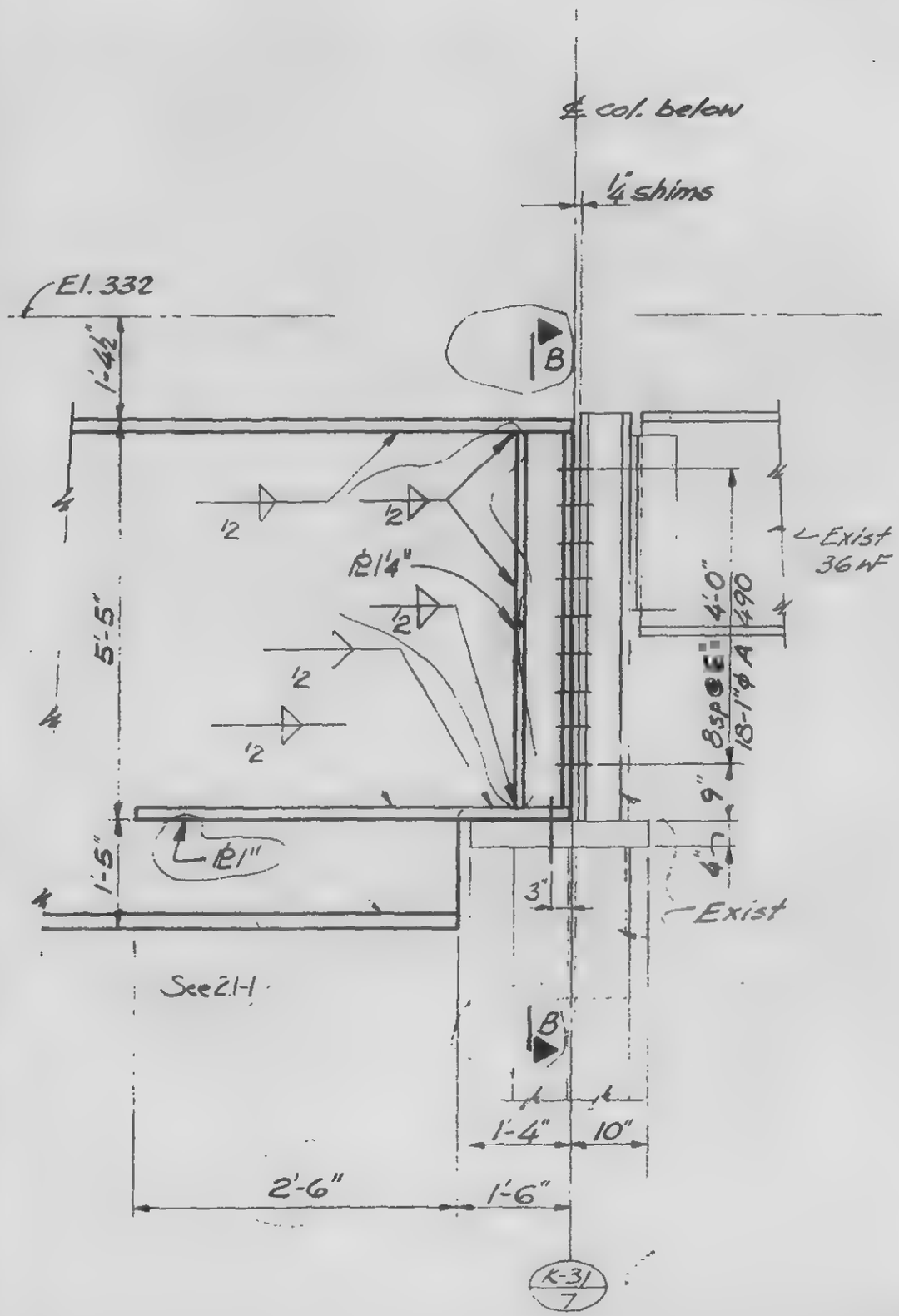

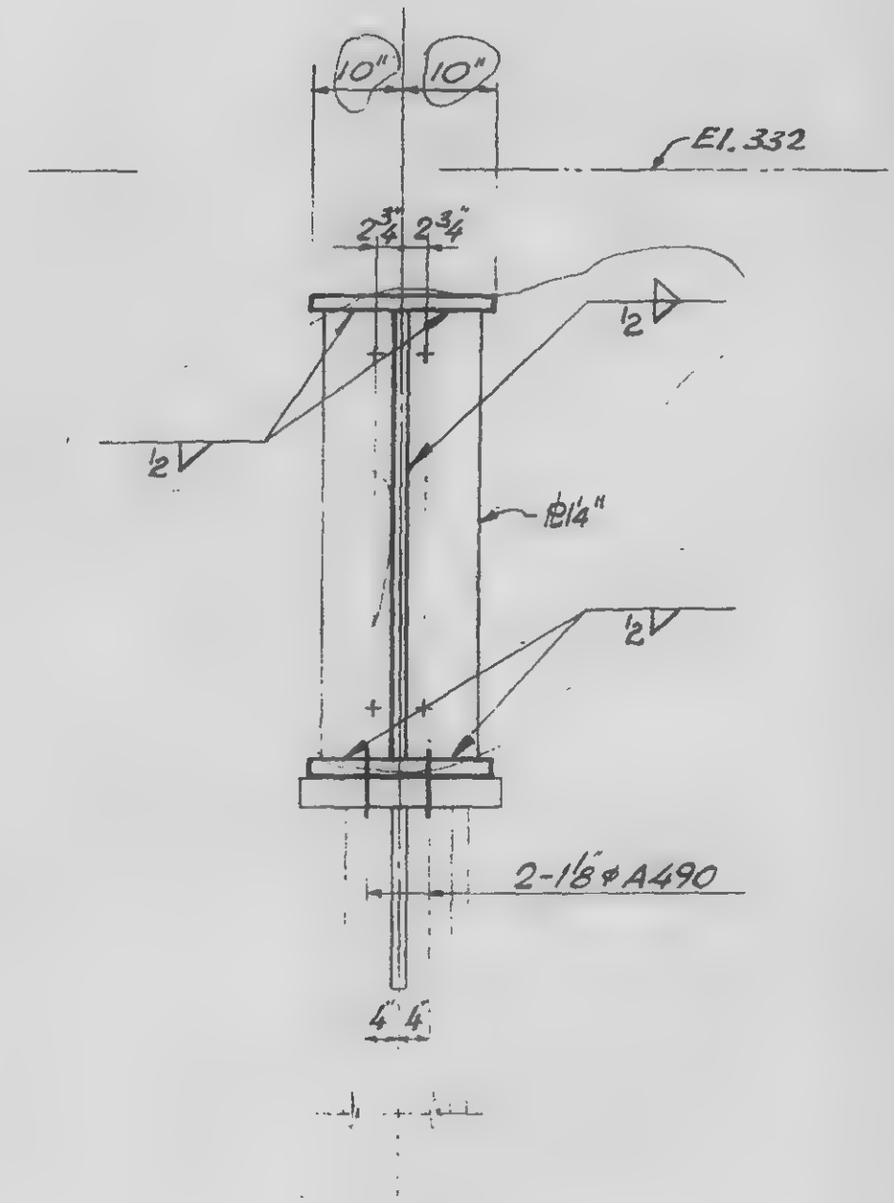

LICENSED PROFESSIONAL ENGINEER — LESLIE E. ROBERTSON — No 34360 — UNIVERSITY OF THE STATE OF NEW YORK

DESIGNED

DRAWN

REVIEWED

A | B

13-K2.4-2

SKILLING, HELLE, CHRISTIANSEN, ROBERTSON — Structural & Civil Engineers

PROJECT: THE WORLD TRADE CENTER | TITLE: GIRDER COLUMN DETAILS | DATE: 11-3-72

REVISIONS

Released for construction 11-20-72

2-5-73

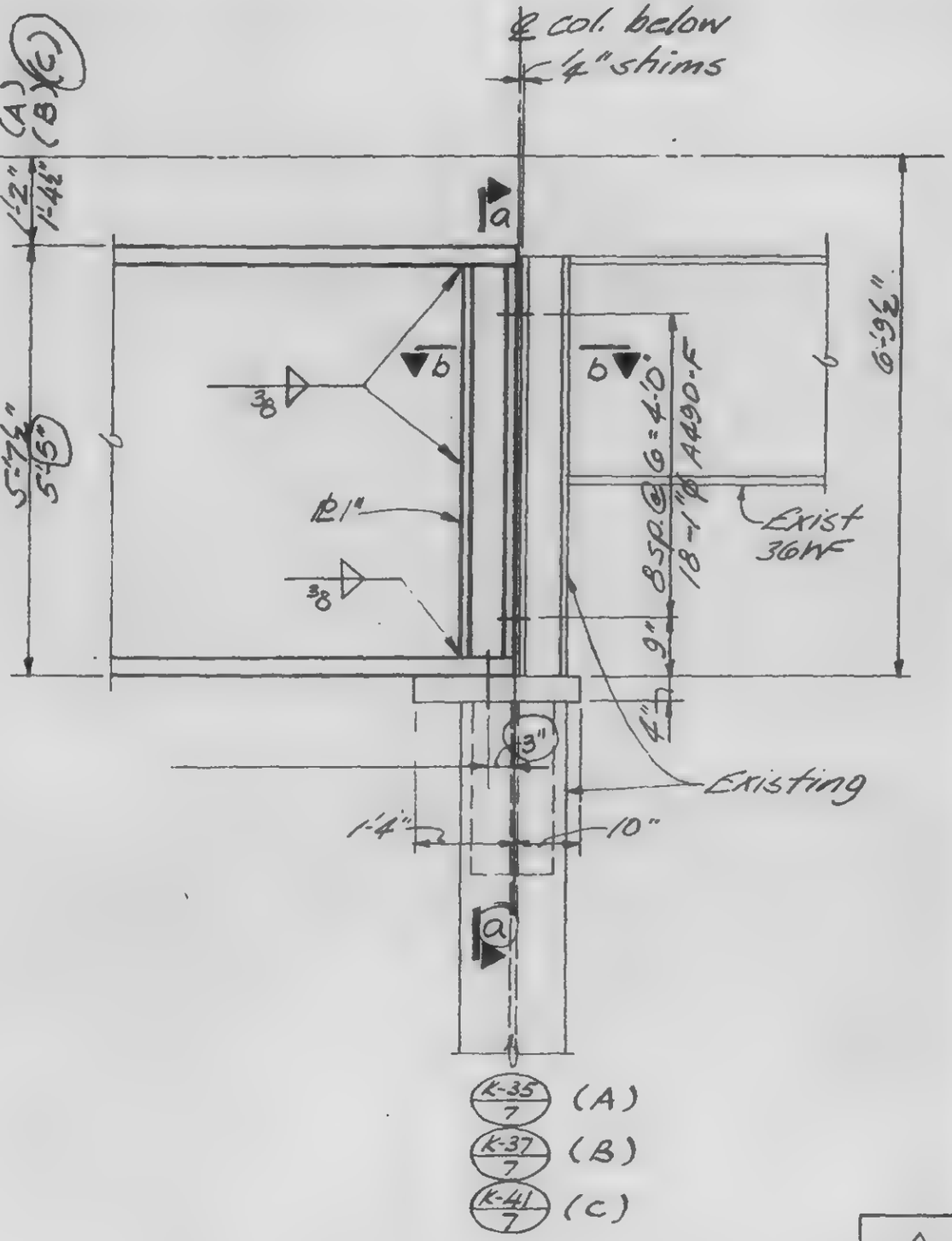

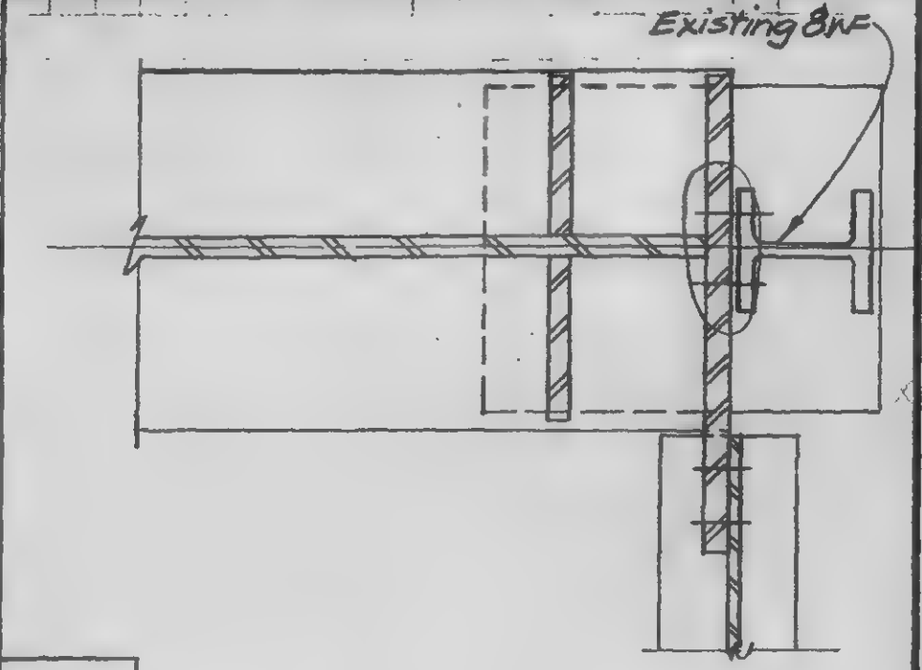

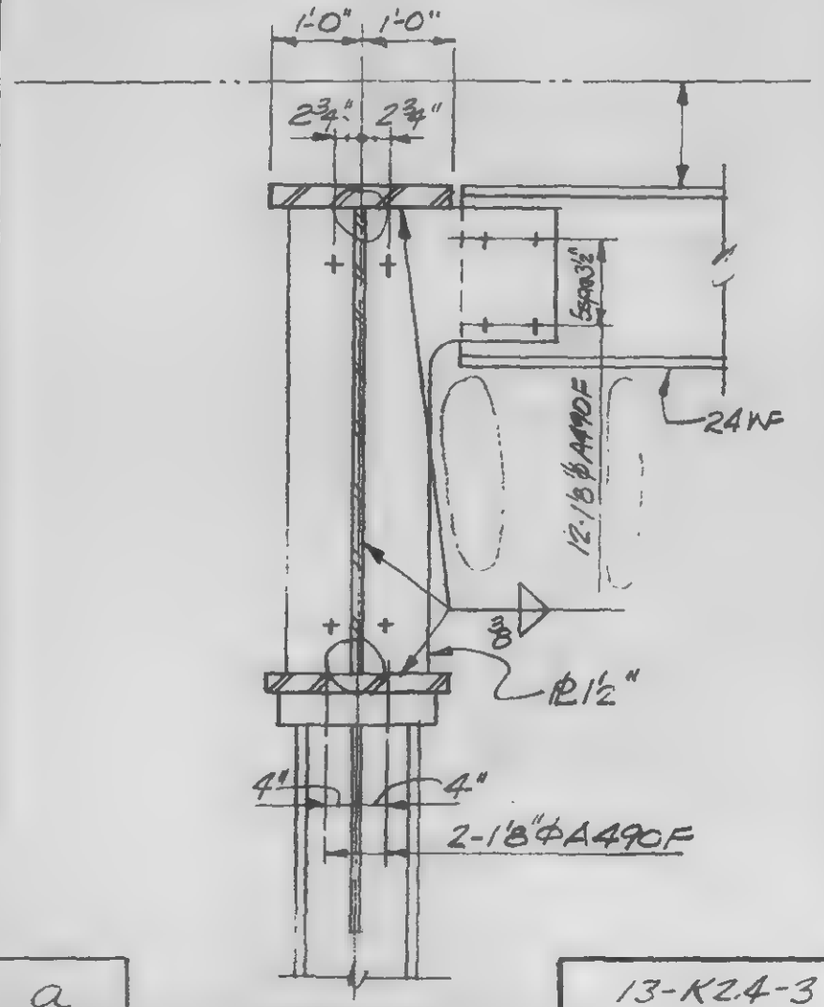

LICENSED PROFESSIONAL ENGINEER
LESLIE E. ROBERTSON
No. 34360
UNIVERSITY OF THE STATE OF NEW YORK

DESIGNED

DRAWN
J. F. Evans

REVIEWED

A
3
C | a

13-K2.4-3

SKILLING, HELLE, CHRISTIANSEN, ROBERTSON — Structural & Civil Engineers

PROJECT THE WORLD TRADE CENTER | TITLE GIRDER COLUMN DETAILS | DATE 11-3-72

REVISIONS

General Revision Released for Construction 11-20-72

2-5-73

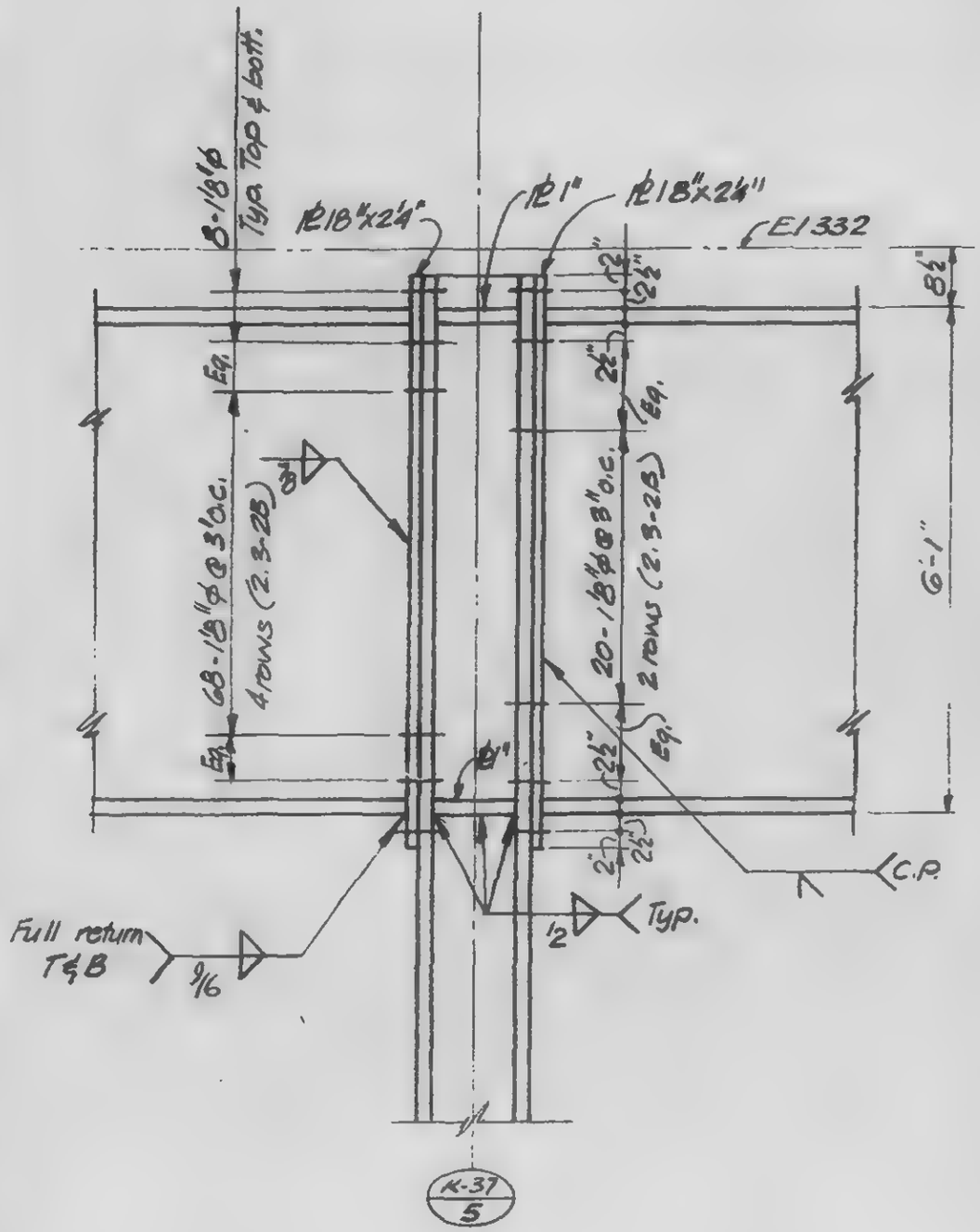

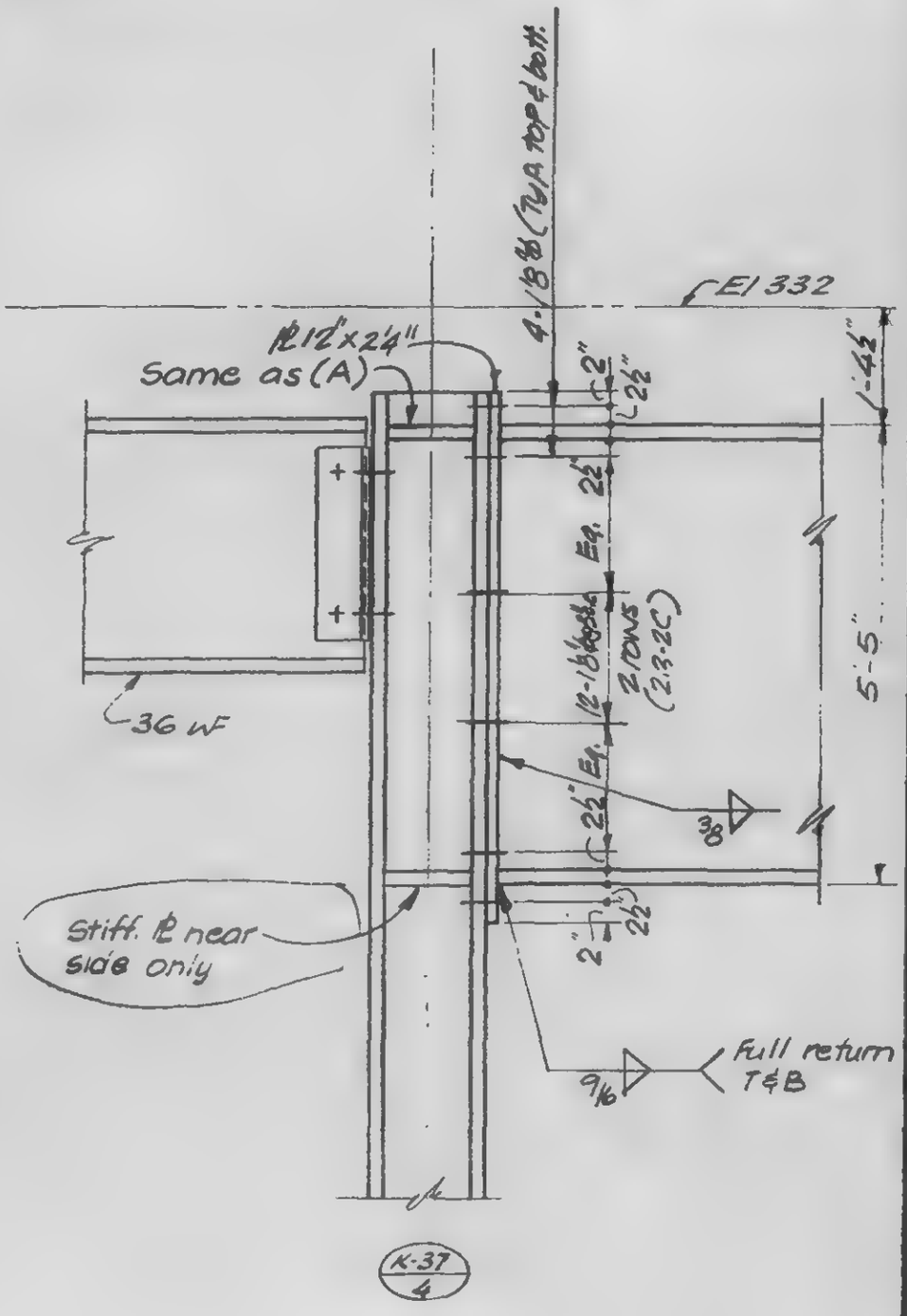

Note: All bolts A490X on this sheet

LICENSED PROFESSIONAL ENGINEER LESLIE E. ROBERTSON No. 34360 UNIVERSITY OF THE STATE OF NEW YORK

DESIGNED

DRAWN John Gracias

REVIEWED

A | B

13-K2.4-4

SKILLING, HELLE, CHRISTIANSEN, ROBERTSON — Structural & Civil Engineers

PROJECT: THE WORLD TRADE CENTER | TITLE: GIRDER COLUMN - DETAILS | DATE: 11-3-72

REVISIONS

General Revision Released for Construction 11-20-72

12-11-72

2-5-73

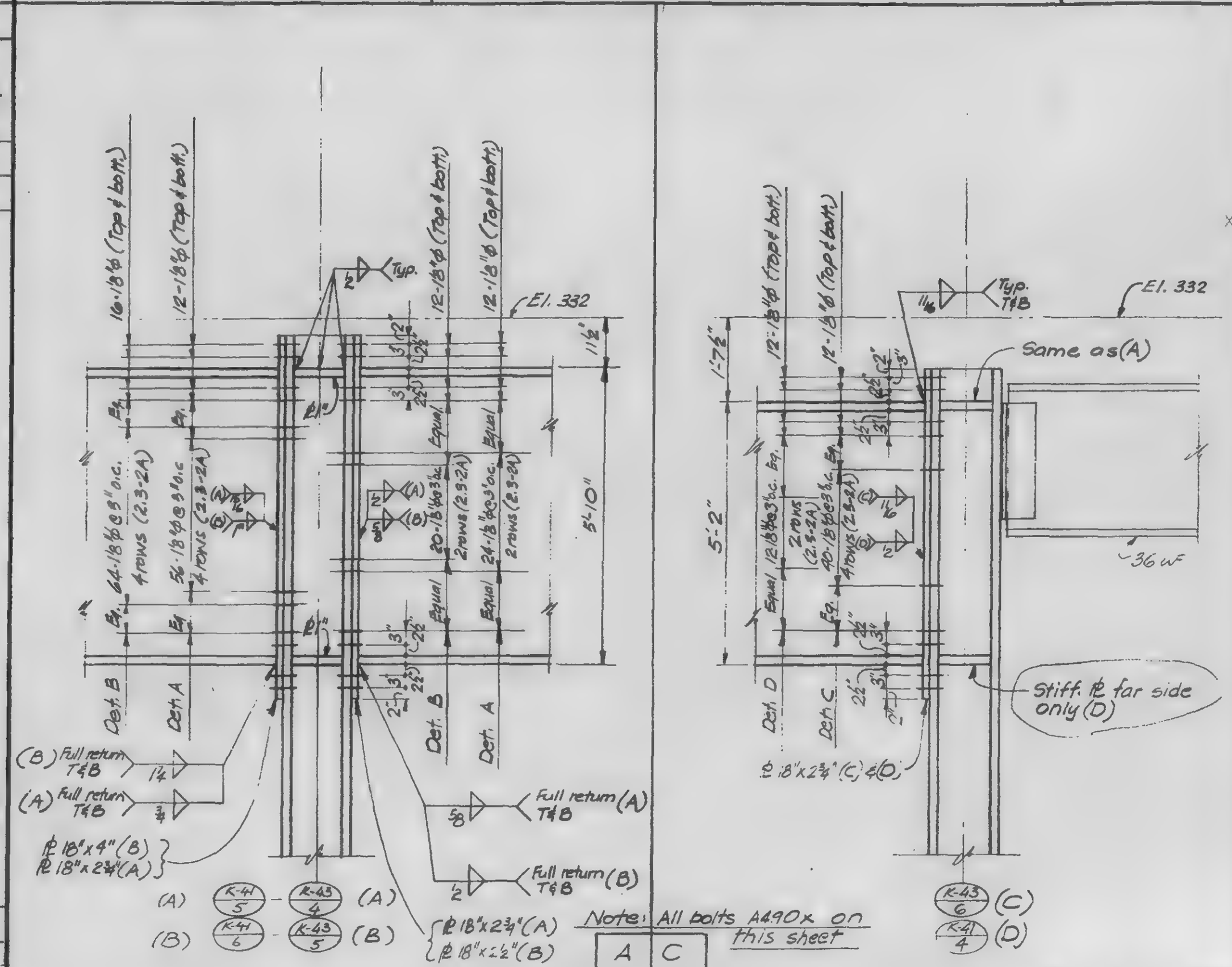

Note: All bolts A490x on this sheet

A	C
B	D

LICENSED PROFESSIONAL ENGINEER — LESLIE E. ROBERTSON — No. 34360 — UNIVERSITY OF THE STATE OF NEW YORK

DESIGNED

DRAWN

REVIEWED

13-K 2.4-5

SKILLING, HELLE, CHRISTIANSEN ROBERTSON — Structural & Civil Engineers

PROJECT THE WORLD TRADE CENTER | TITLE GIRDER COLUMN DETAILS | DATE 11-3-72

REVISIONS

General Revision - Released for construction 11-20-72

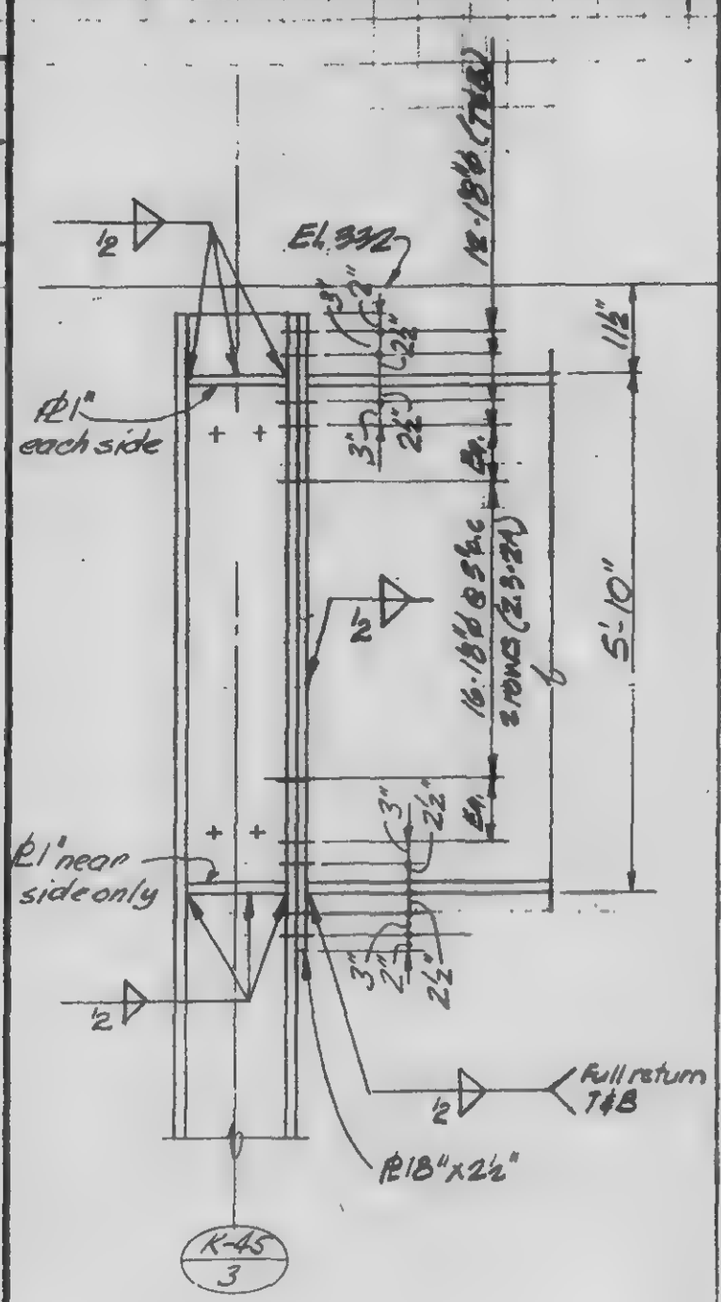

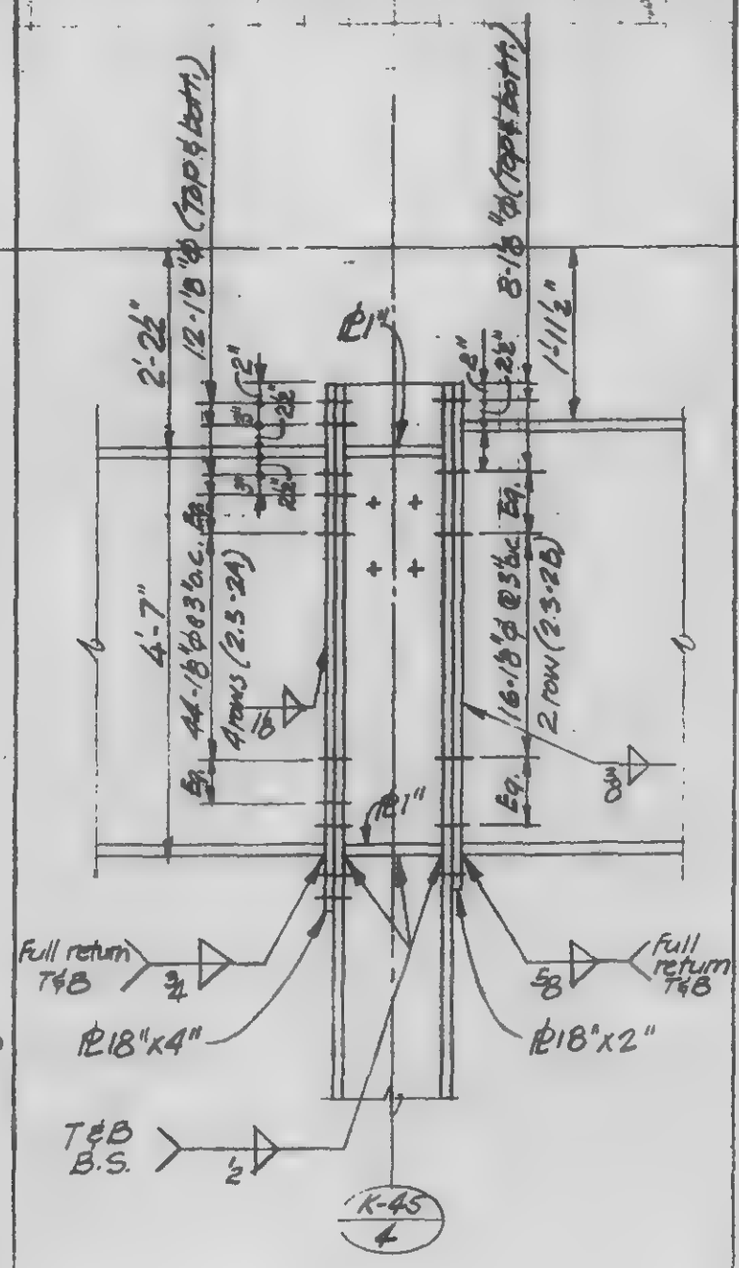

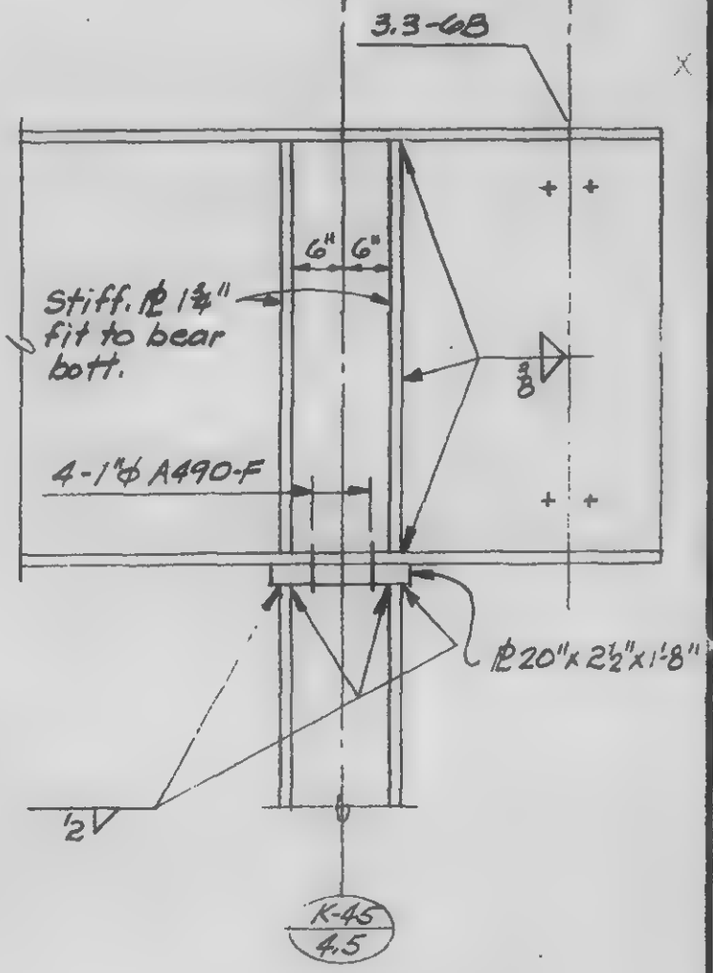

Note: All bolts to be A490X on this sheet

DESIGNED

DRAWN

REVIEWED

A | B | C

13-K2.4-6

SKILLING, HELLE, CHRISTIANSEN ROBERTSON — Structural & Civil Engineers

PROJECT THE WORLD TRADE CENTER | TITLE GIRDER COLUMN DETAILS | DATE 11-8-72

REVISIONS

RELEASED FOR CONSTRUCTION 11-20-72

2-5-73

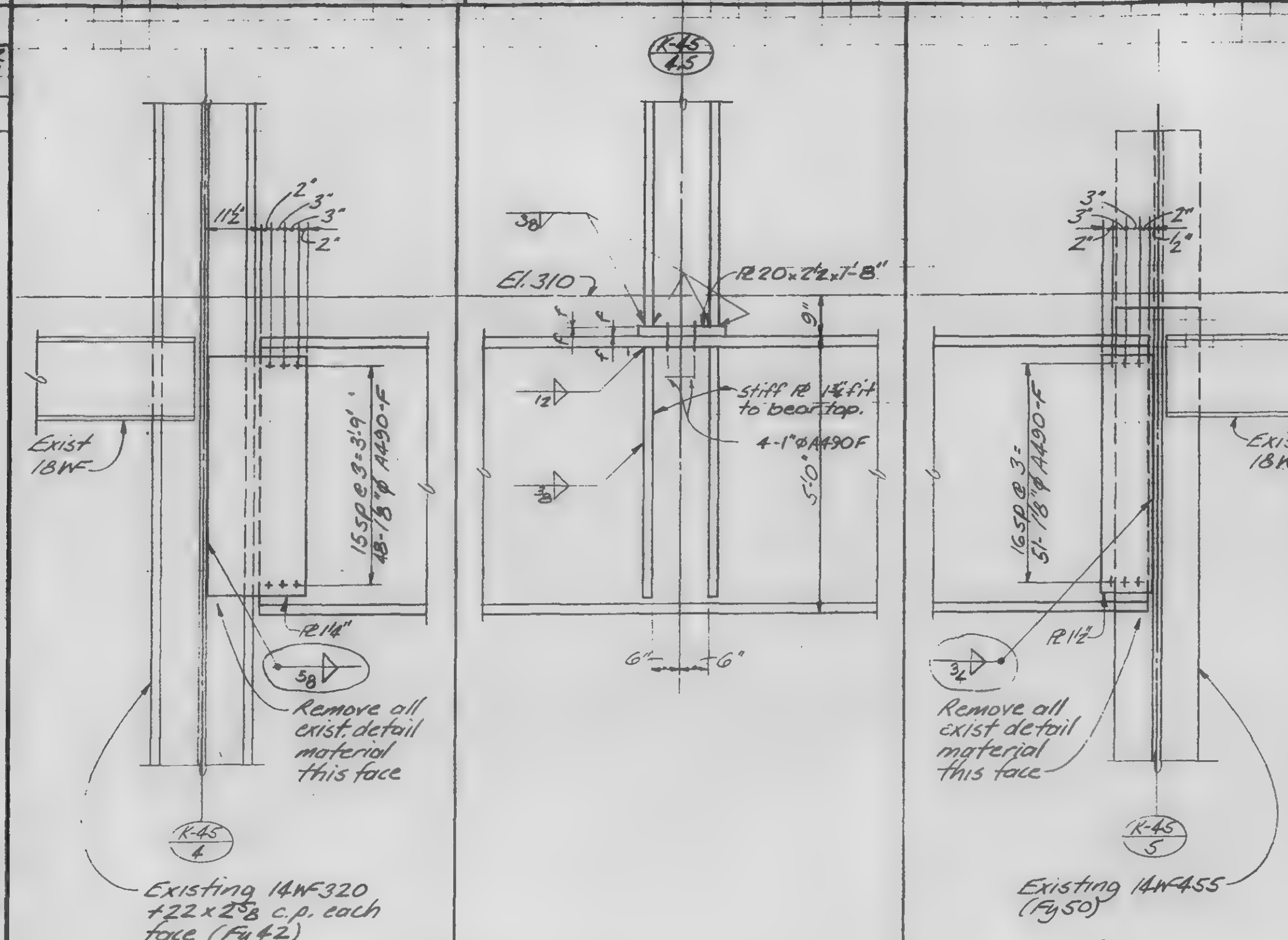

LICENSED PROFESSIONAL ENGINEER — LESLIE E. ROBERTSON — No 34360 — UNIVERSITY OF THE STATE OF NEW YORK

DESIGNED

DRAWN

REVIEWED

A | B | C

13-K2.4-7

SKILLING, HELLE, CHRISTIANSEN, ROBERTSON — Structural & Civil Engineers

PROJECT: THE WORLD TRADE CENTER — TITLE: GIRDER COLUMN DETAILS — DATE: 11-3-72

REVISIONS

General Revision Released for construction 11-20-72

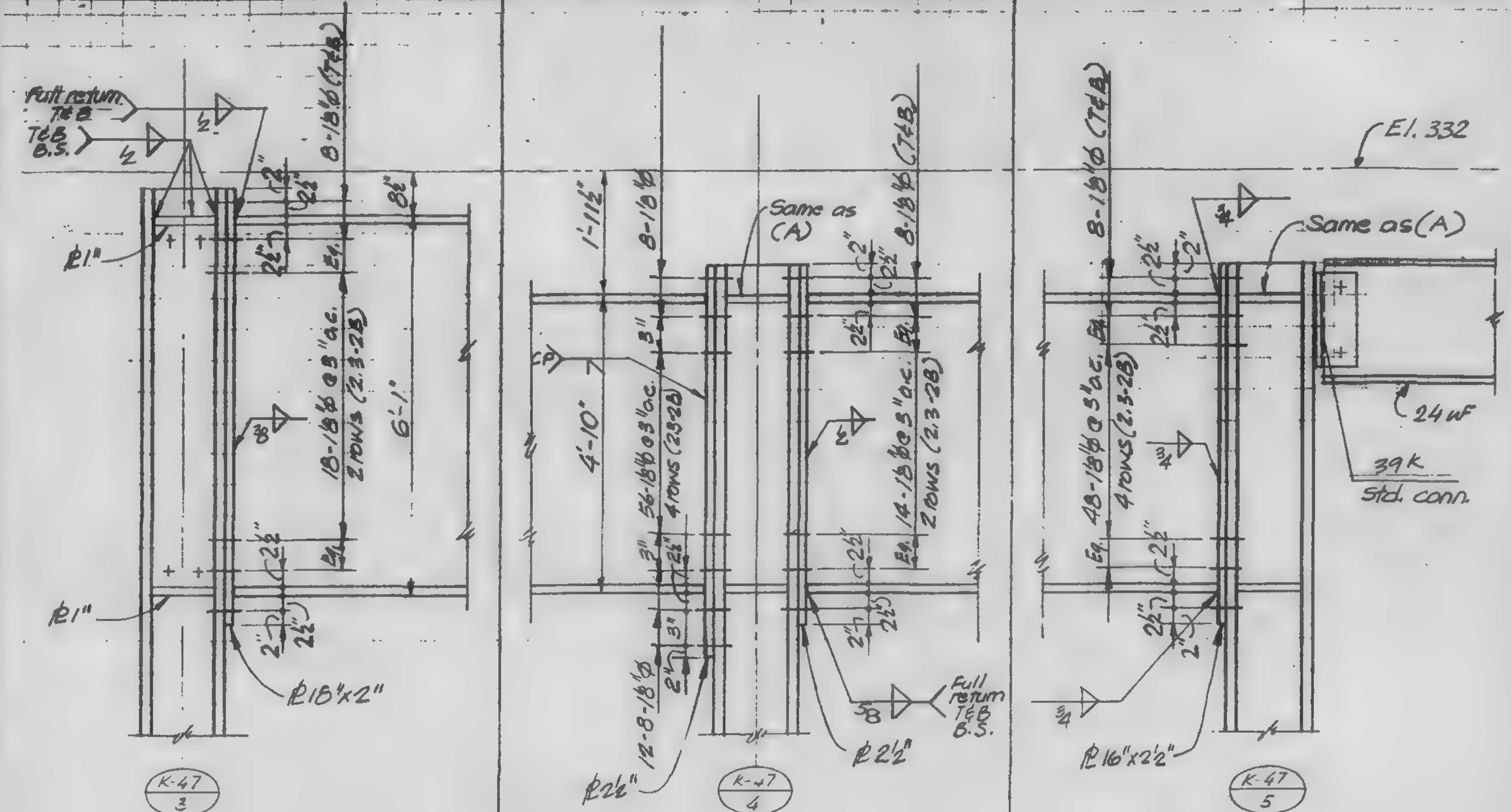

Note: All bolts A490X on this sheet

A	B	C

13-K2.4-8

LICENSED PROFESSIONAL ENGINEER — LESLIE E. ROBERTSON — No 34360 — UNIVERSITY OF THE STATE OF NEW YORK

DRAWN

REVIEWED

SKILLING, HELLE, CHRISTIANSEN, ROBERTSON — Structural & Civil Engineers

PROJECT: THE WORLD TRADE CENTER | TITLE: GIRDER COLUMN DETAILS | DATE: 11-20-72

REVISIONS

Released for construction 11-20-72

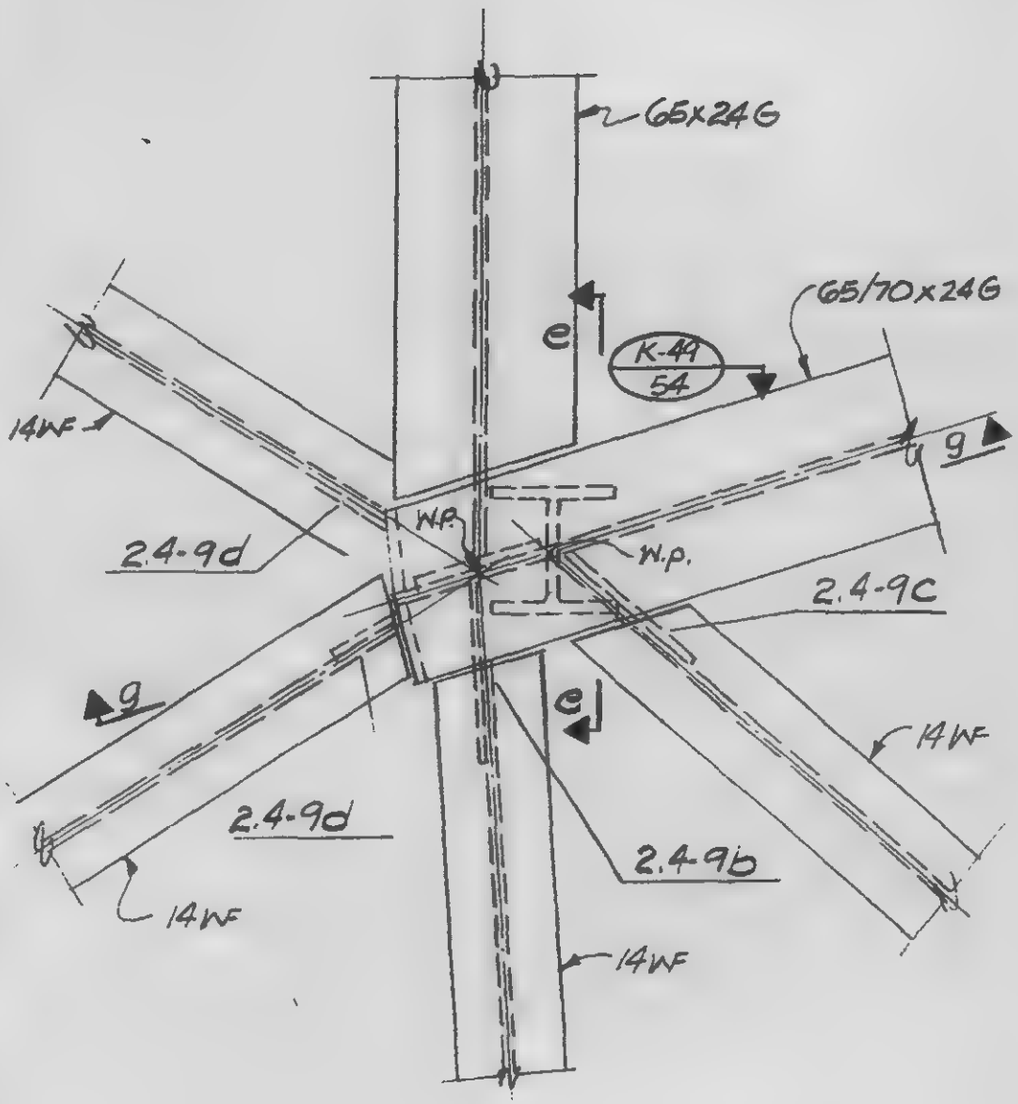

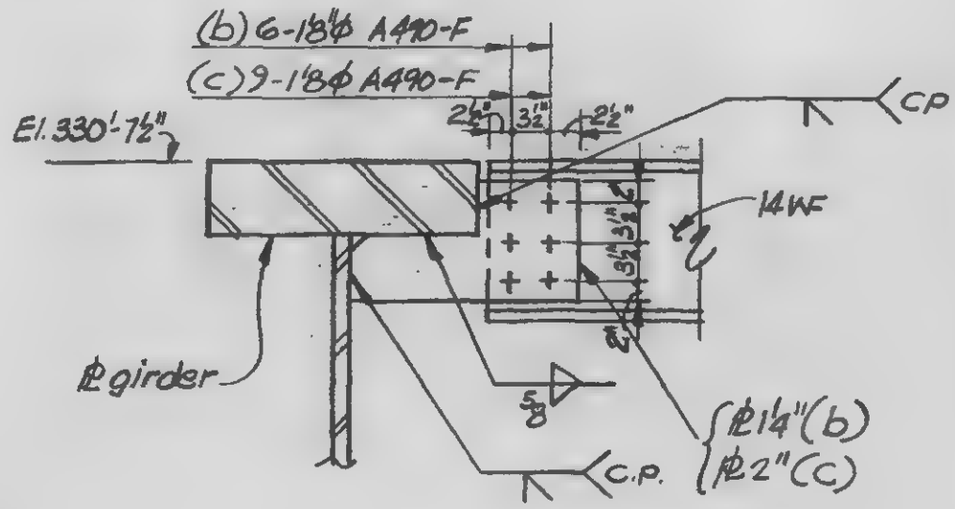

b

c

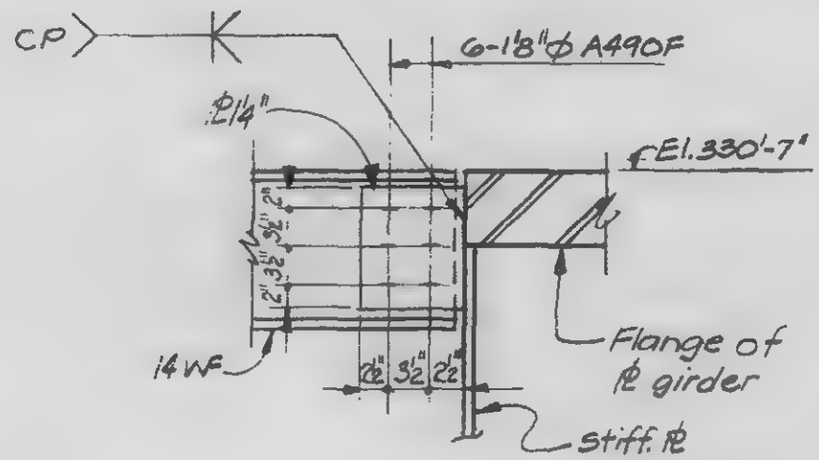

d

13-K2.4-9.1

LICENSED PROFESSIONAL ENGINEER — LESLIE E. ROBERTSON — NO 34360 — UNIVERSITY OF THE STATE OF NEW YORK

DESIGNED

AWR

REVIEWED

SKILLING, HELLE, CHRISTIANSEN, ROBERTSON — Structural & Civil Engineers

PROJECT THE WORLD TRADE CENTER | TITLE GIRDER COLUMN DETAILS | DATE 11-3-72

REVISIONS

Released for construction 11-20-72

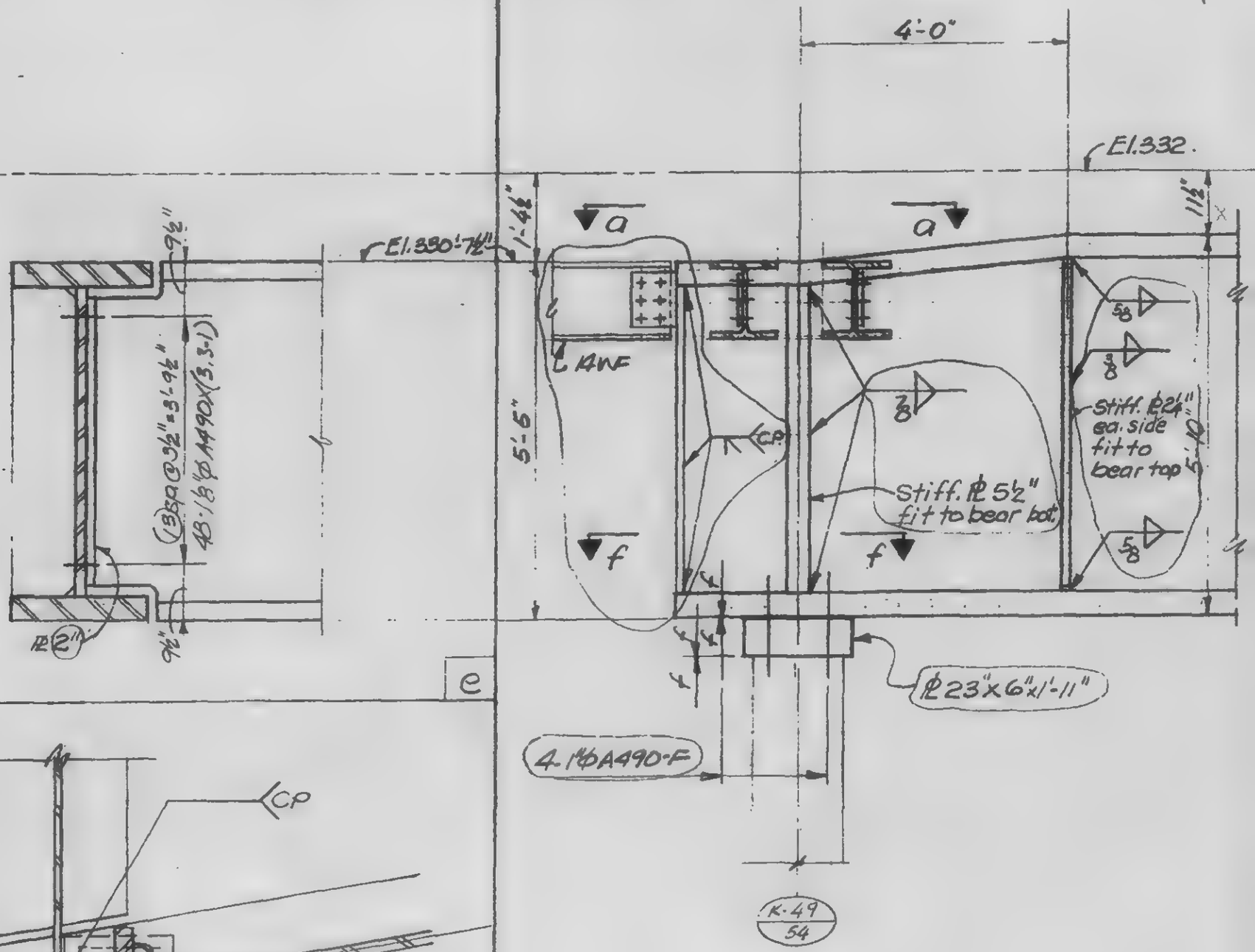

LICENSED PROFESSIONAL ENGINEER — LESLIE E. ROBERTSON — No 34980 — UNIVERSITY OF THE STATE OF NEW YORK

DESIGNED

DRAWN John G Vicens

REVIEWED

13-K 2.4-92

SKILLING, HELLE, CHRISTIANSEN, ROBERTSON — Structural & Civil Engineers

PROJECT THE WORLD TRADE CENTER | TITLE GIRDER COLUMN DETAIL | DATE 11-3-72

REVISIONS

General Revision Released for construction 11-20-72

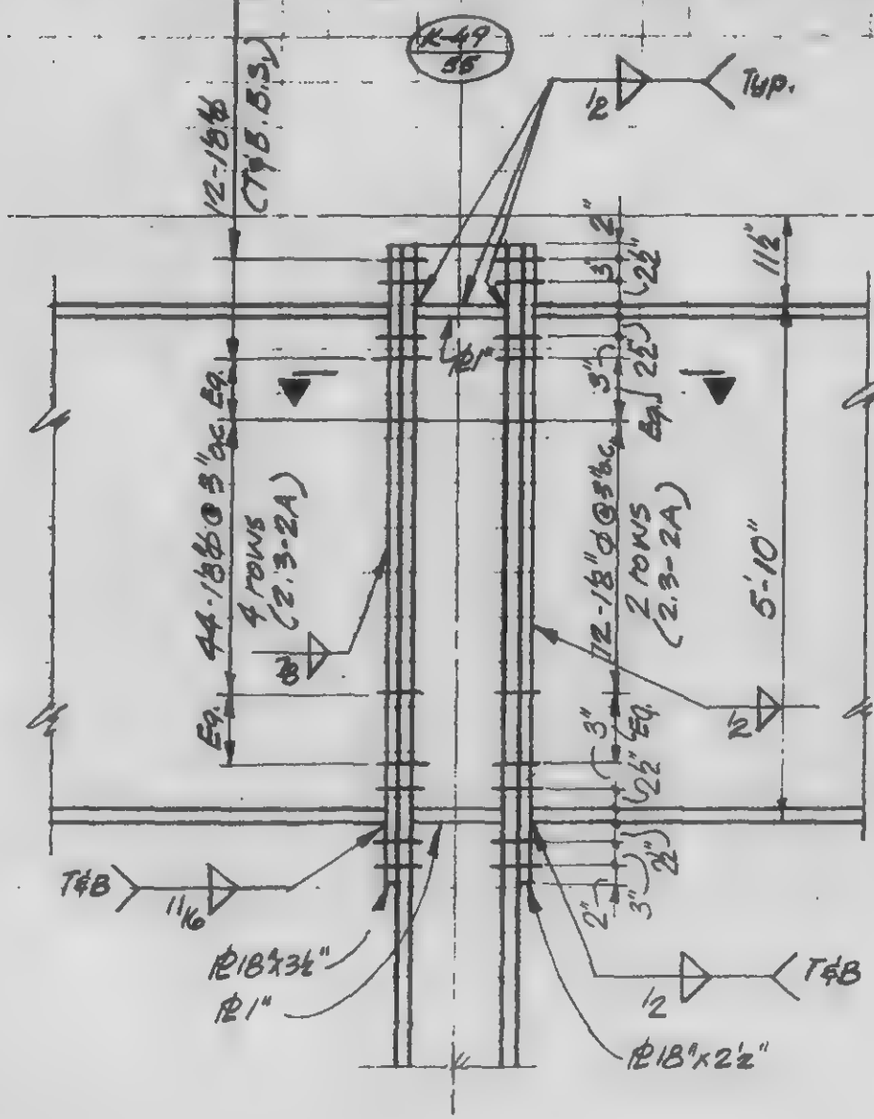

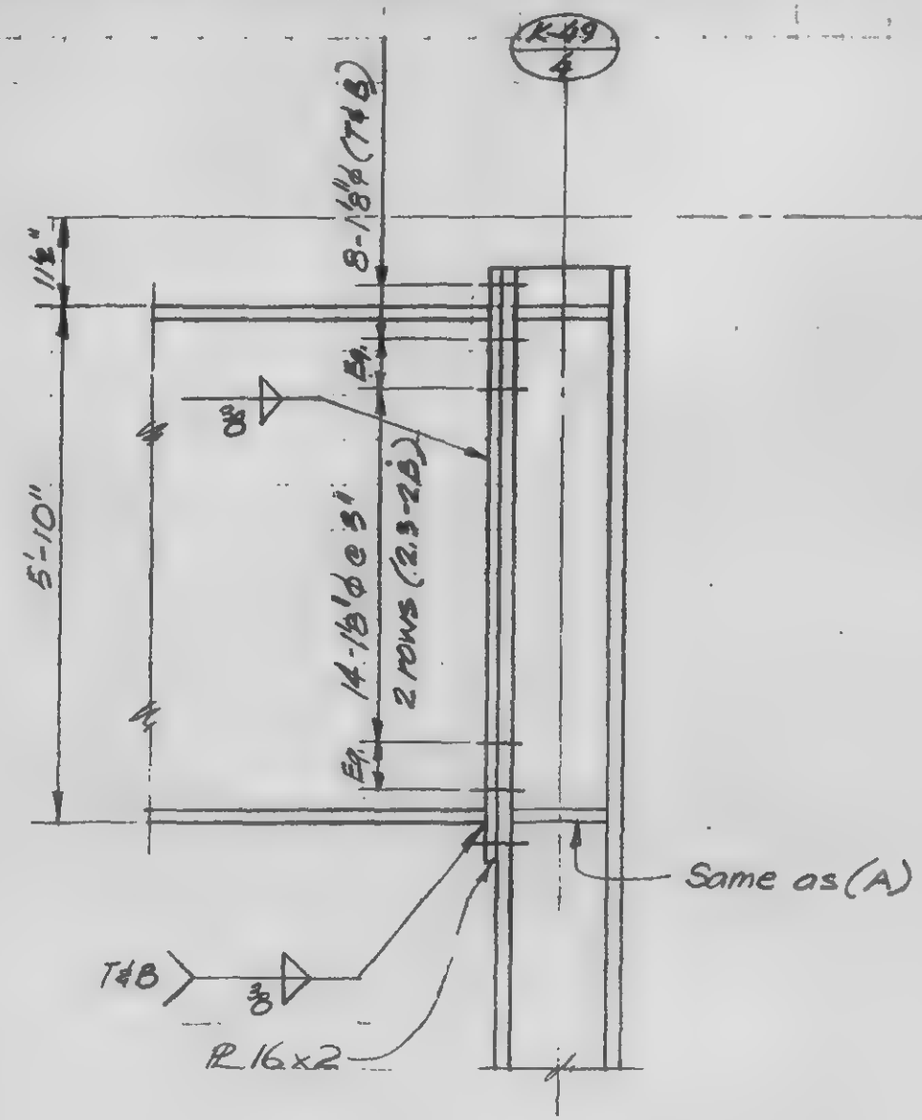

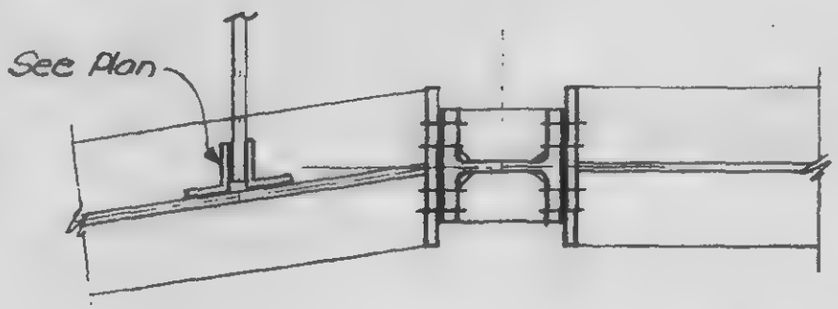

Note: All bolts A490X on this sheet.

LICENSED PROFESSIONAL ENGINEER — LESLIE E. ROBERTSON — No 34360 — UNIVERSITY OF THE STATE OF NEW YORK

DESIGNED

DRAWN John G. Iacus

REVIEWED

A | B

13-K2.4-10

SKILLING, HELLE, CHRISTIANSEN, ROBERTSON — Structural & Civil Engineers

PROJECT: THE WORLD TRADE CENTER

TITLE: GIRDER COLUMN DETAILS

DATE: 11-3-72

REVISIONS

Released for construction 11-20-72

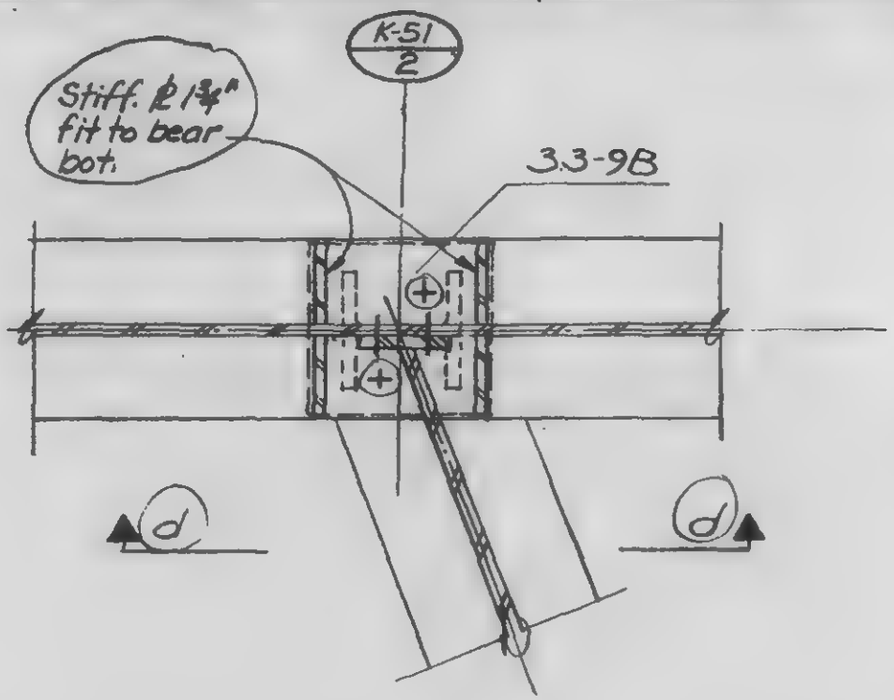

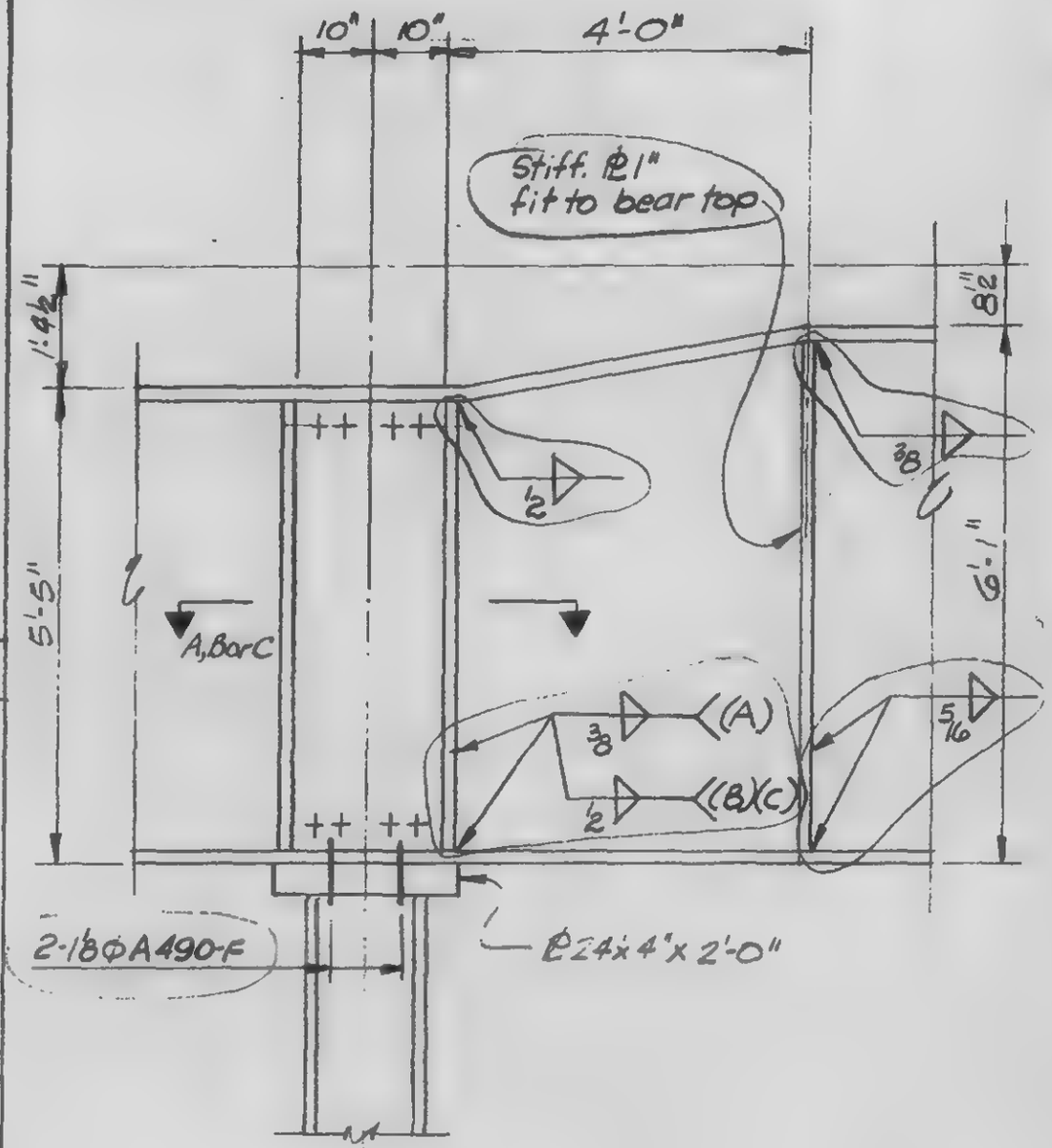

A

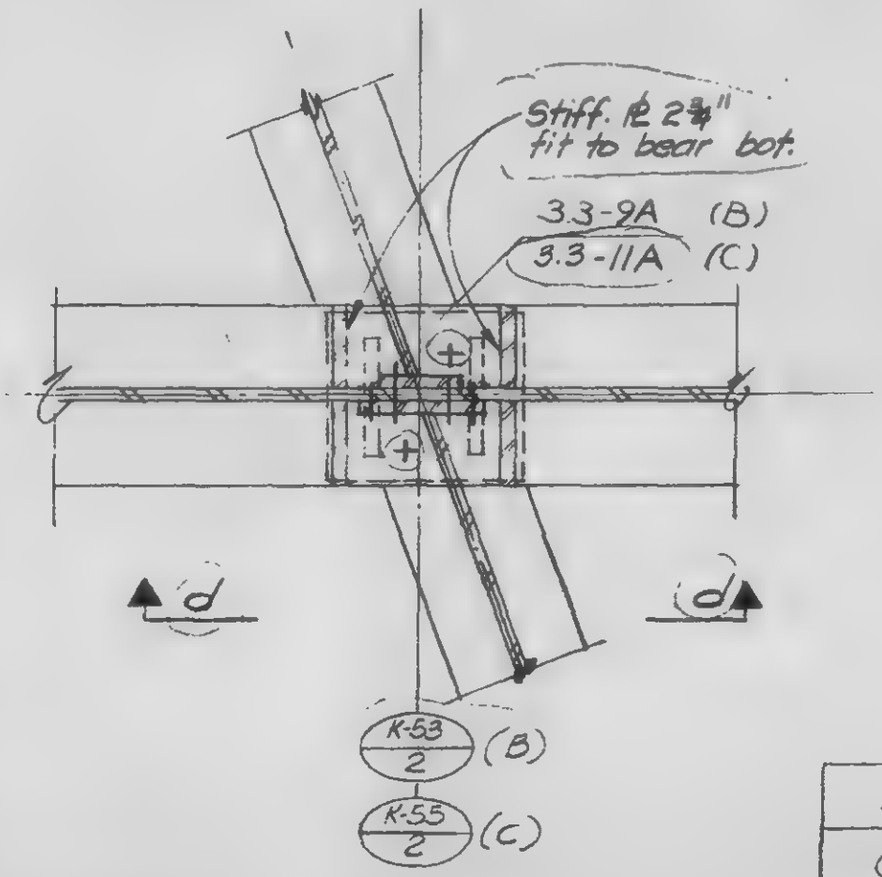

3

C d

LICENSED PROFESSIONAL ENGINEER
LESLIE E. ROBERTSON
No. 34360
UNIVERSITY OF THE STATE OF NEW YORK

DESIGNED

DRAWN

REVIEWED

13-K2.4-11

SKILLING, HELLE, CHRISTIANSEN, ROBERTSON — Structural & Civil Engineers

PROJECT: THE WORLD TRADE CENTER

TITLE: GIRDER COLUMN DETAILS

DATE: 11-3-72

REVISIONS

General Revision Release for construction 11-20-72

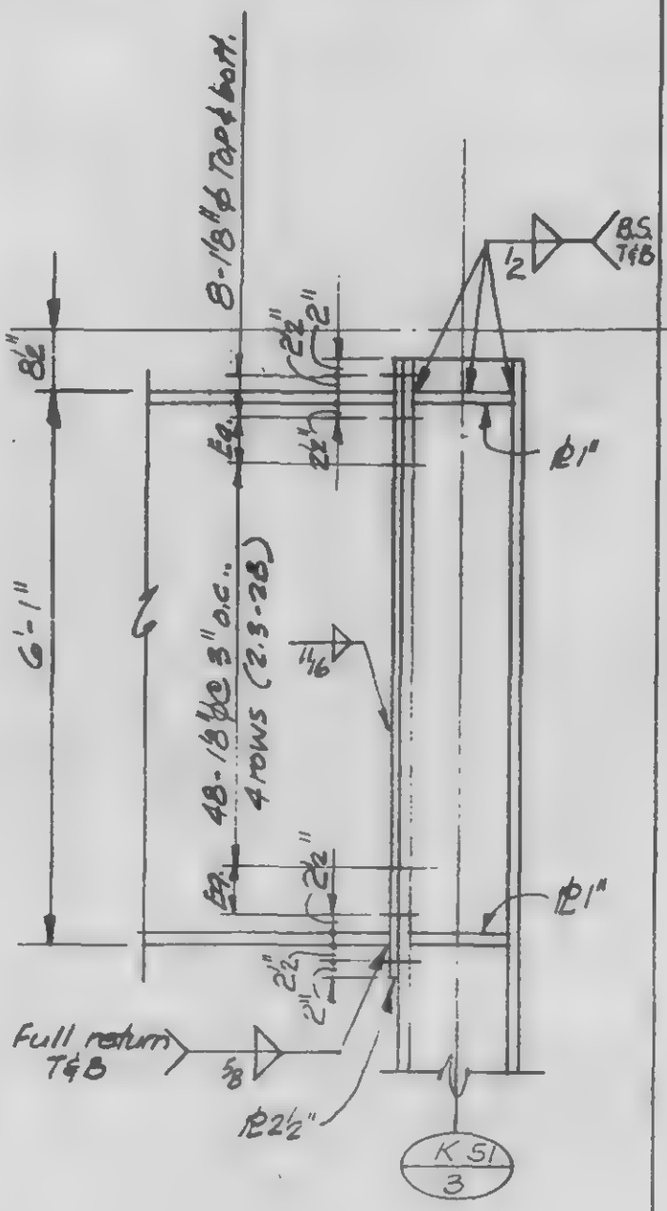

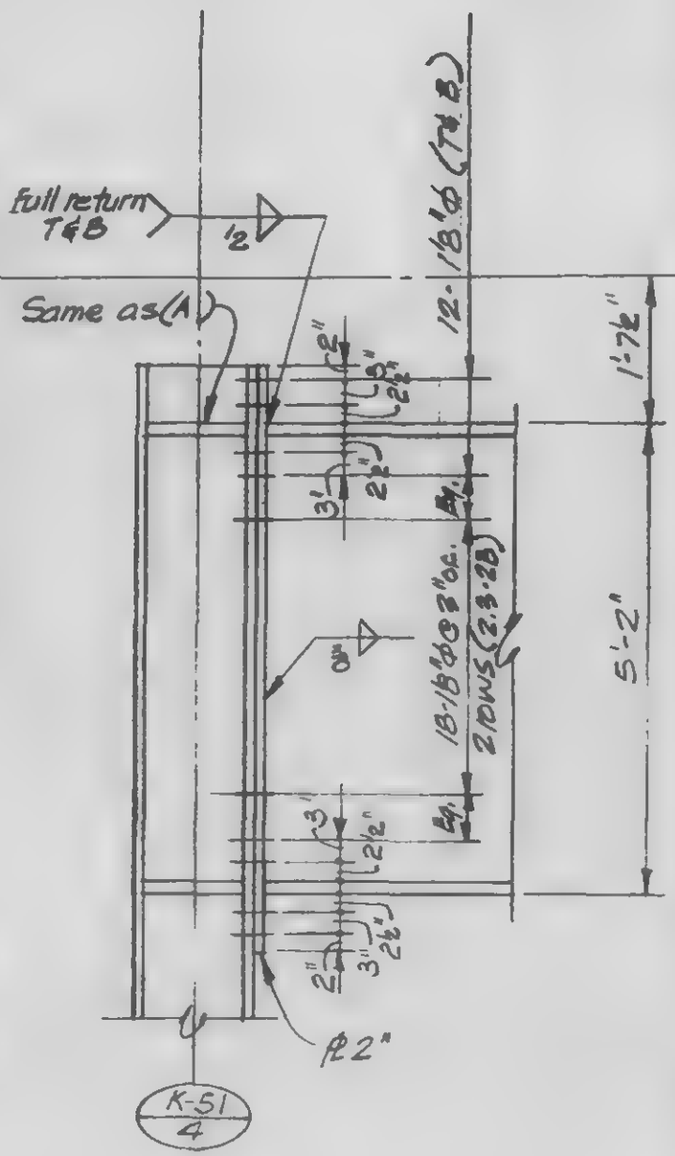

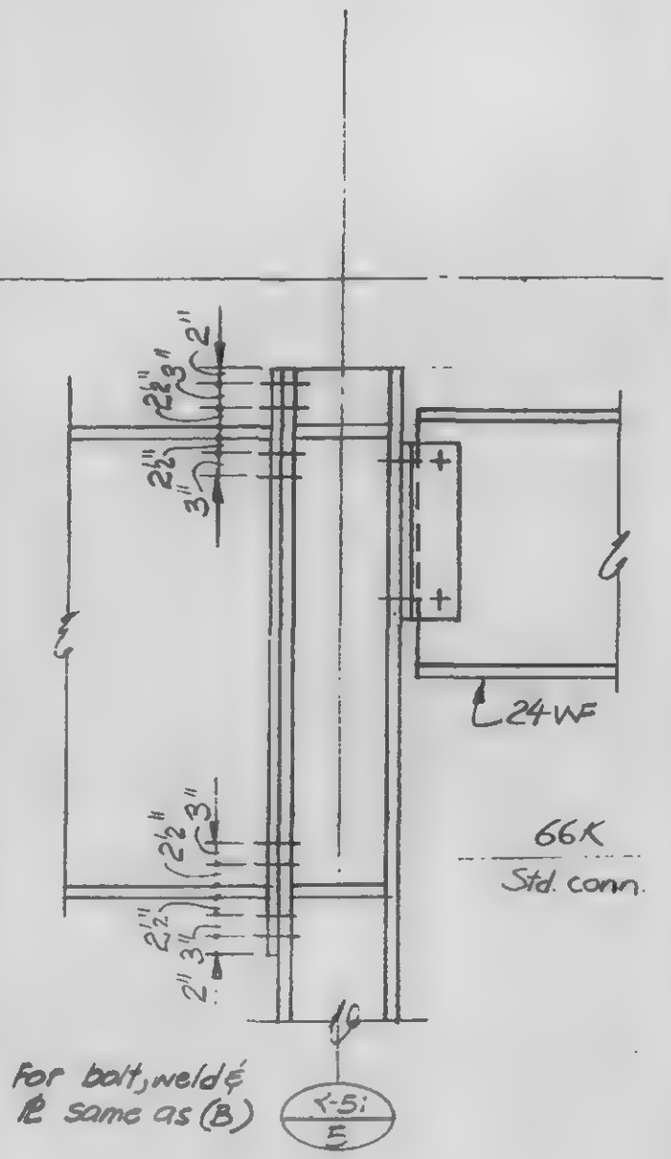

Note: All bolts A490X on this sheet

DESIGNED

DRAWN

REVIEWED

A | B | C

3-K2.4-12

SKILLING, HELLE, CHRISTIANSEN, ROBERTSON — Structural & Civil Engineers

PROJECT THE WORLD TRADE CENTER

TITLE GIRDER COLUMN DETAILS

DATE 11-9-72

REVISIONS

General Revision Release for Construction 11-20-72

4-20-73

Note: All bolts A490X on this sheet

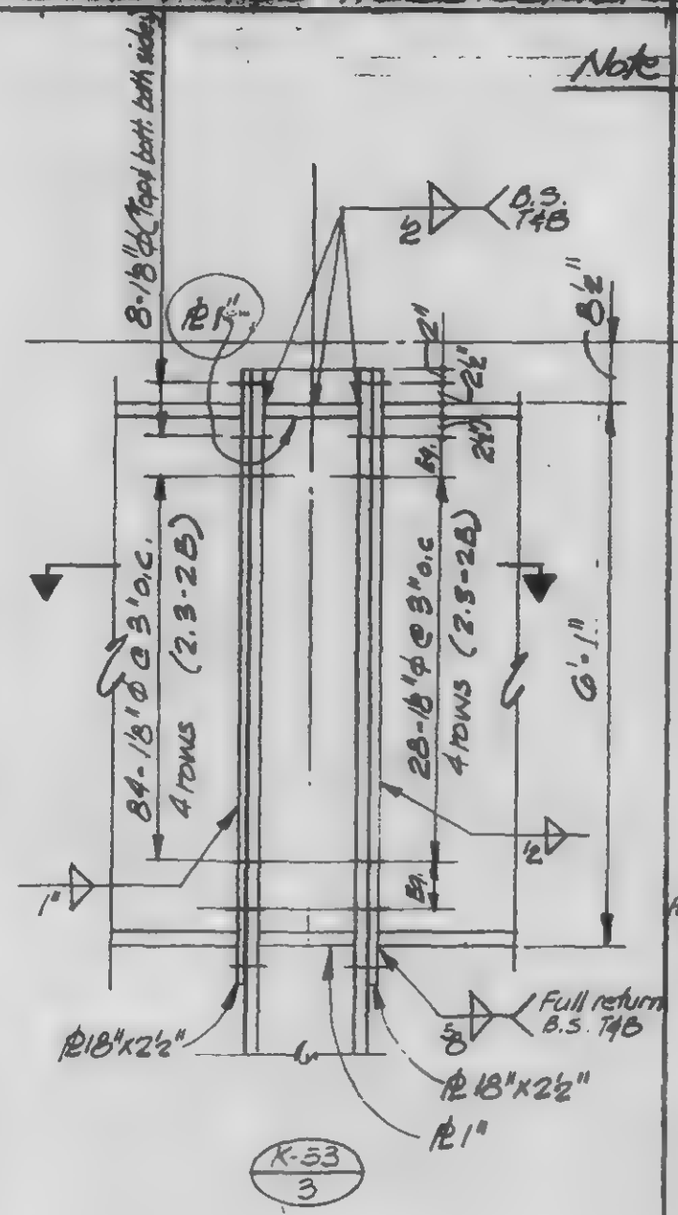

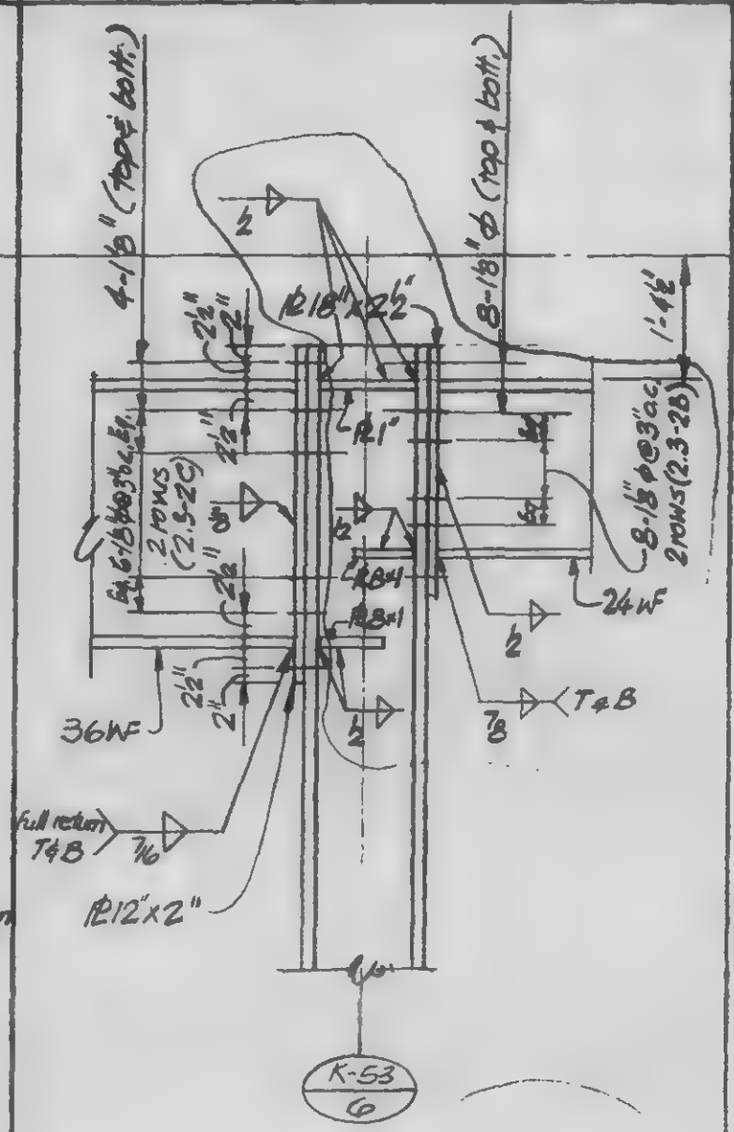

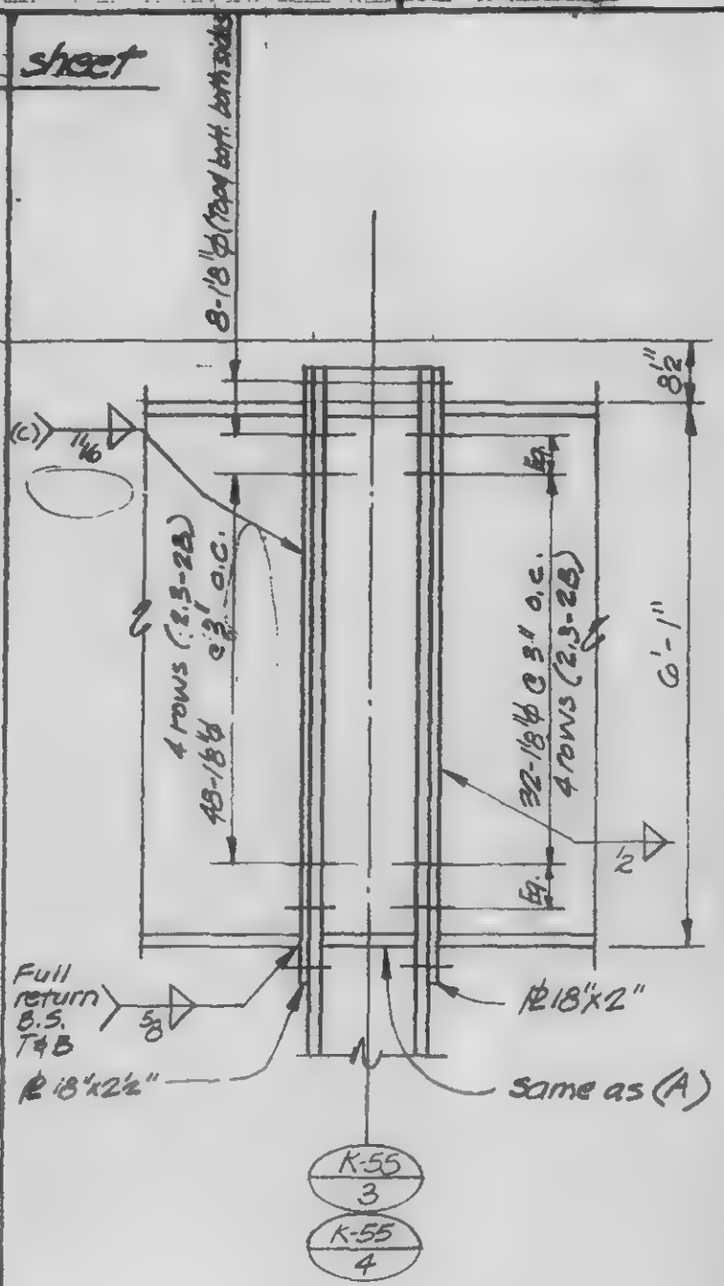

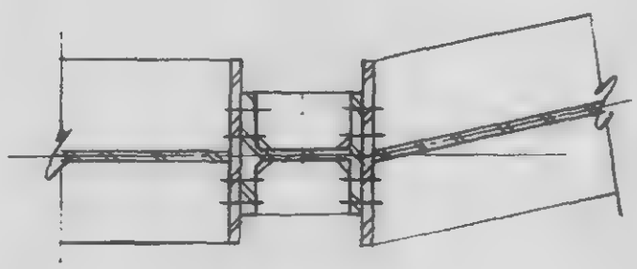

A B C

13-K2.4-13

LICENSED PROFESSIONAL ENGINEER — LESLIE E. ROBERTSON — No. 34960 — UNIVERSITY OF THE STATE OF NEW YORK

DESIGNED K. Chiang

DRAWN

REVIEWED

SKILLING, HELLE, CHRISTIANSEN, ROBERTSON — Structural & Civil Engineers

PROJECT: THE WORLD TRADE CENTER

TITLE: GIRDER COLUMNS DETAILS

DATE: 11-3-72

REVISIONS

RELEASE FOR CONSTRUCTION 11-20-72

4-20-73

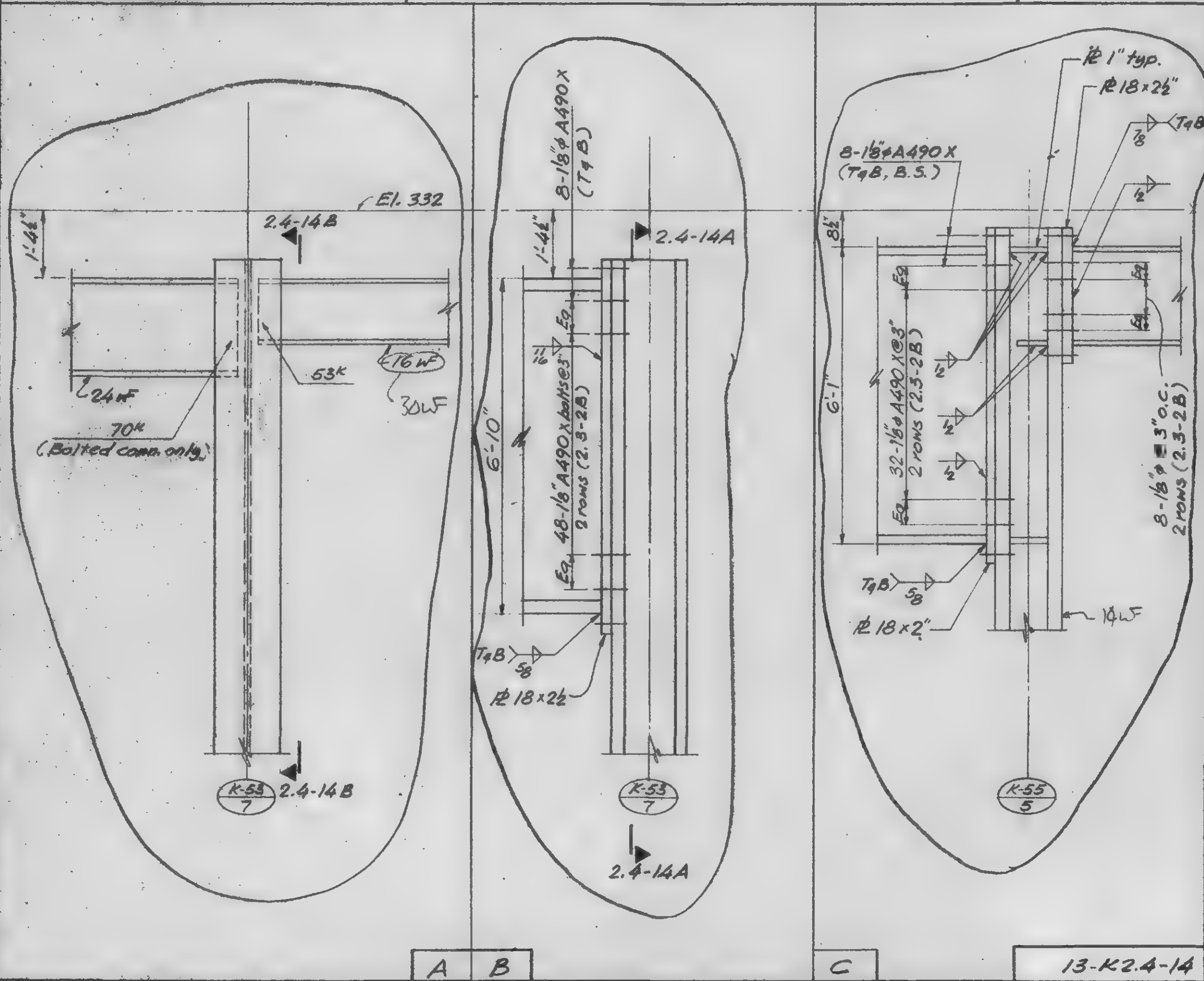

13-K2.4-14

LICENSED PROFESSIONAL ENGINEER
LESLIE E. ROBERTSON
No. 34380
UNIVERSITY OF THE STATE OF NEW YORK

DESIGNED: R. Chiang

DRAWN: John Grants

REVIEWED

SKILLING, HELLE, CHRISTIANSEN, ROBERTSON — Structural & Civil Engineers

PROJECT: THE WORLD TRADE CENTER

TITLE: GIRDER COLUMNS DETAILS

DATE: 11-3-72

REVISIONS

RELEASE FOR CONSTRUCTION 11-20-72

4-20-73

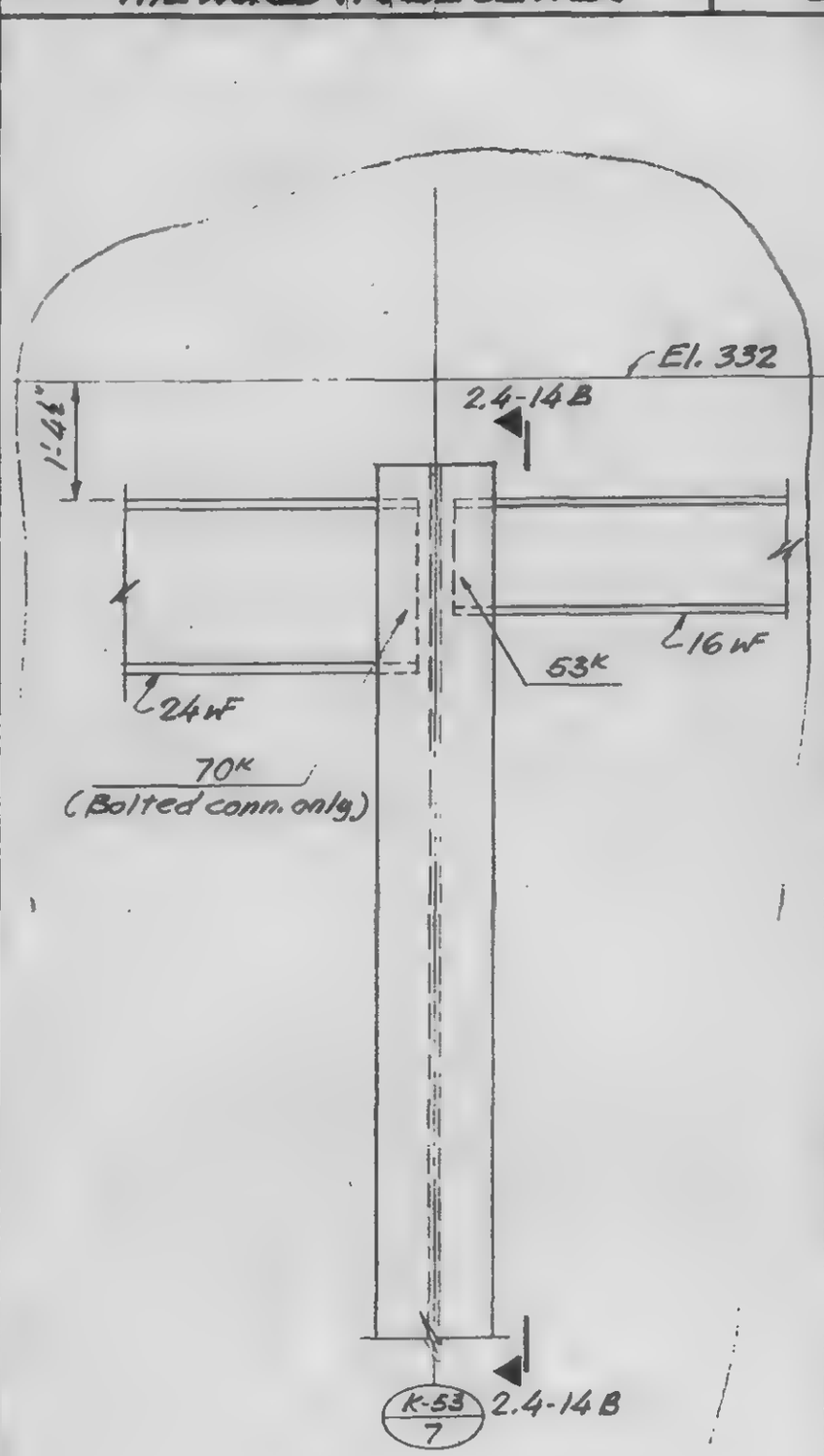

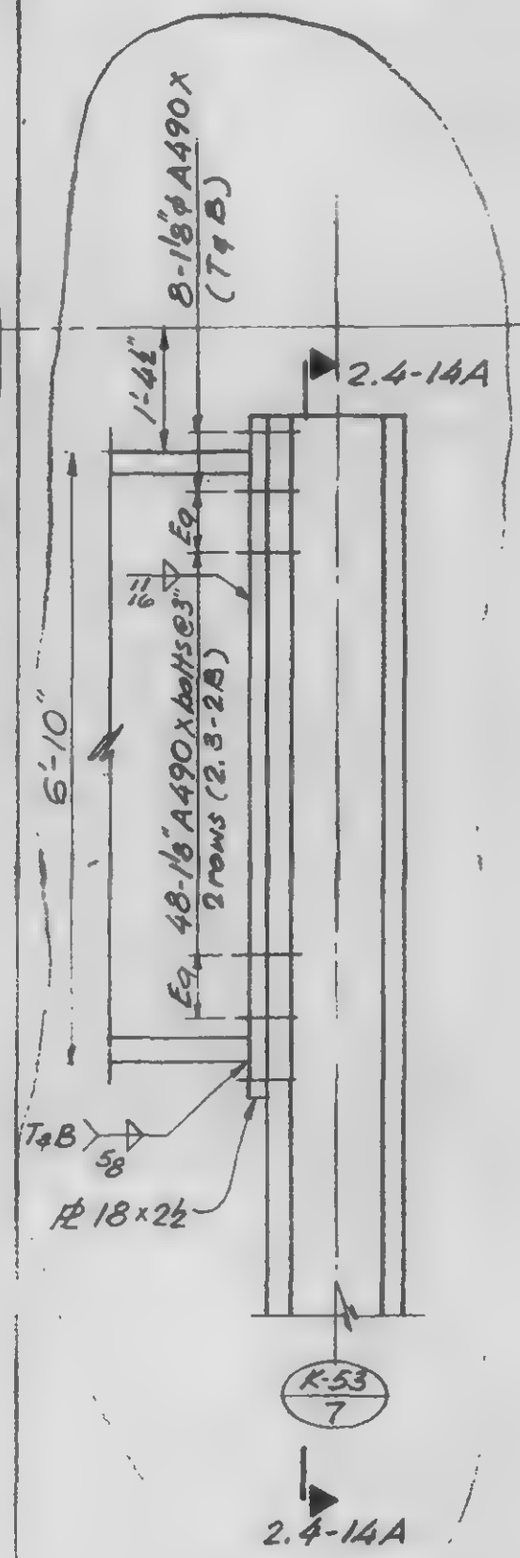

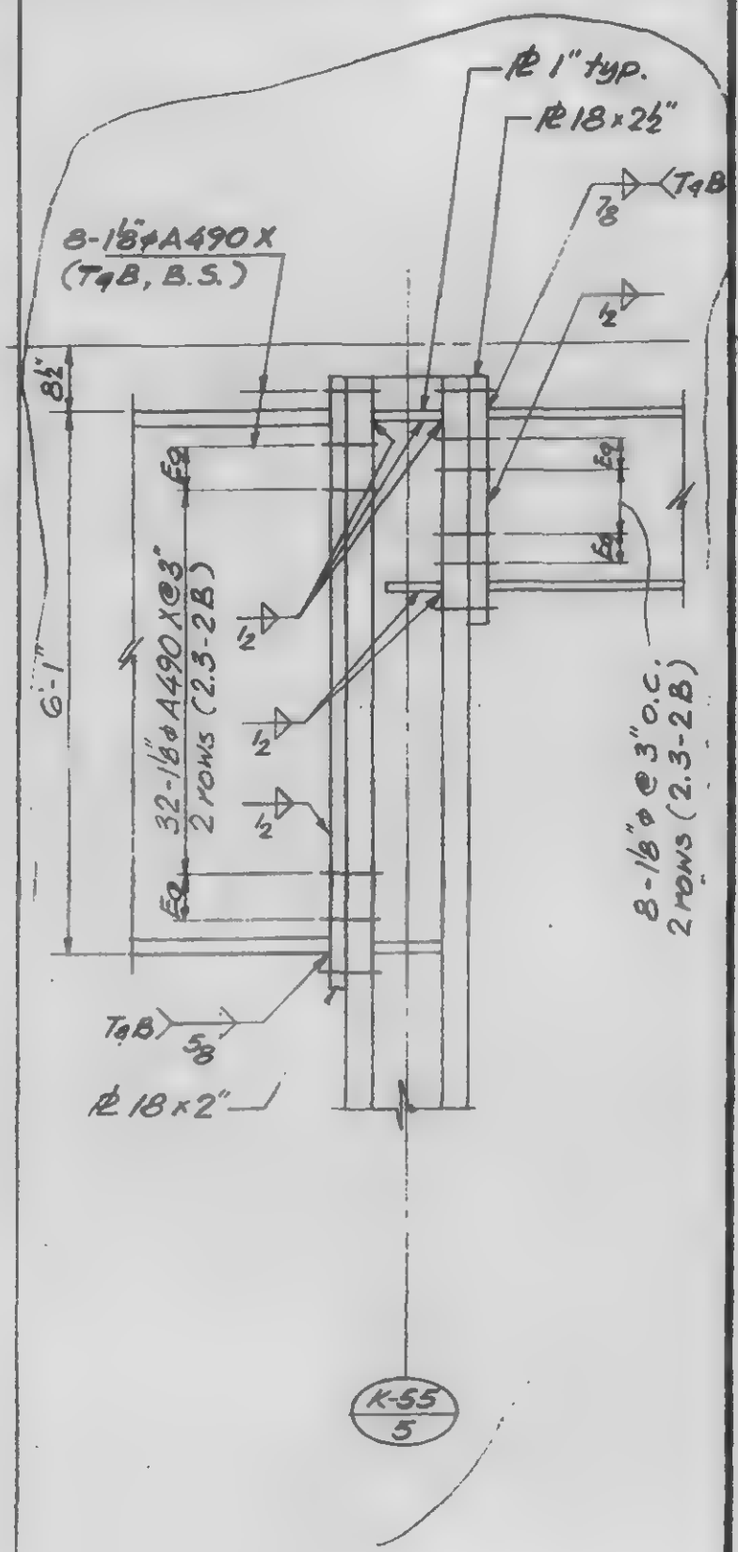

LICENSED PROFESSIONAL ENGINEER
LESLIE E. ROBERTSON
No 34360
UNIVERSITY OF THE STATE OF NEW YORK

DESIGNED K. Chiang

DRAWN

REVIEWED

A | B | C

13-K2.4-14

SKILLING, HELLE, CHRISTIANSEN, ROBERTSON — Structural & Civil Engineers

PROJECT: THE WORLD TRADE CENTER | TITLE: GIRDER COLUMN DETAILS | DATE: 11-20-72

REVISIONS

Released for construction 11-20-72

12-11-72

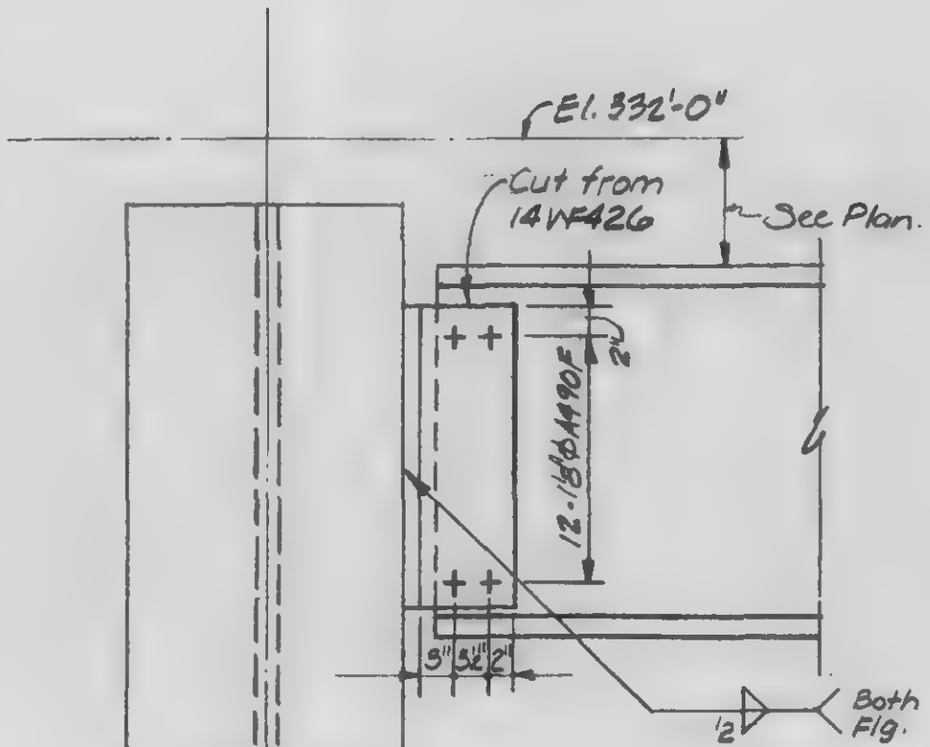

K-35/6 — See 9.1-1D

K-37/6

K-41/6 — See 9.1-1C

K-43/5

K-51/3 — See 9.1-2

K-53/3

K-55/3

K-43/6 — See 9.1-1A

LICENSED PROFESSIONAL ENGINEER — LESLIE E. ROBERTSON — No. 34360 — UNIVERSITY OF THE STATE OF NEW YORK

SIGNED

REVIEWED

13-K2.4-15

SKILLING, HELLE, CHRISTIANSEN, ROBERTSON — Structural & Civil Engineers

PROJECT: THE WORLD TRADE CENTER | TITLE: GIRDER COLUMN DETAILS | DATE: 11-20-72

REVISIONS

Released for construction 11-20-72

12-11-72

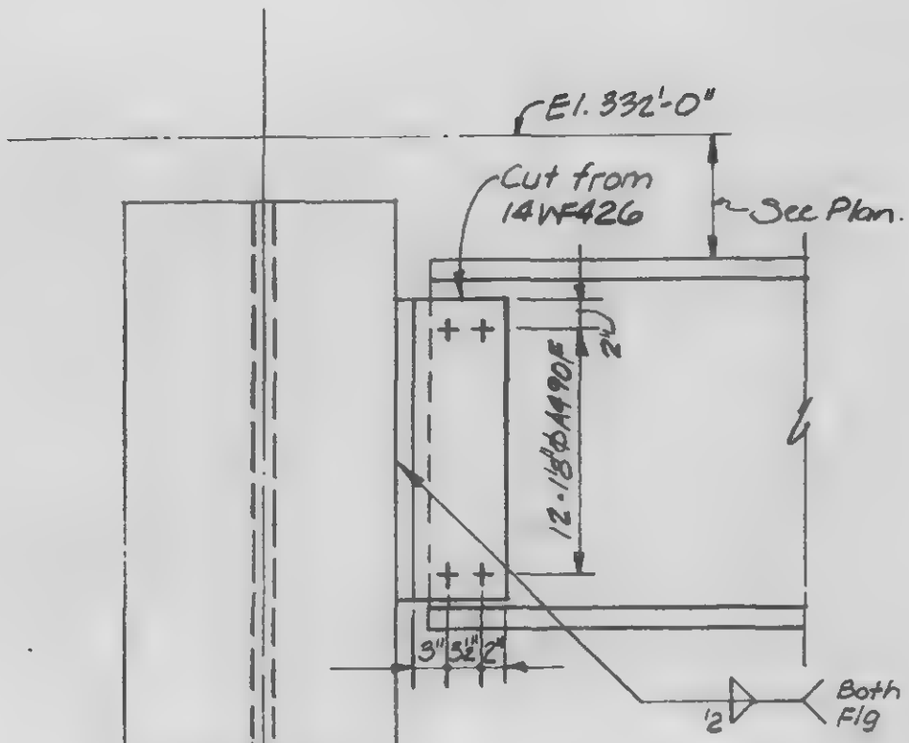

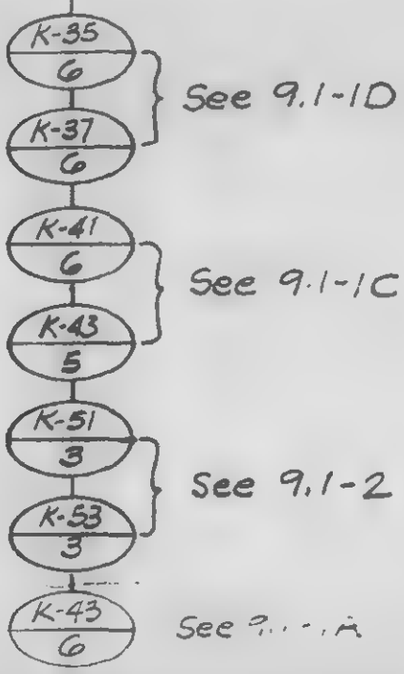

3-K2.4-15

SKILLING, HELLE, CHRISTIANSEN, ROBERTSON — Structural & Civil Engineers

PROJECT THE WORLD TRADE CENTER | TITLE GIRDER COLUMN DETAIL | DATE 4-20-73

REVISIONS

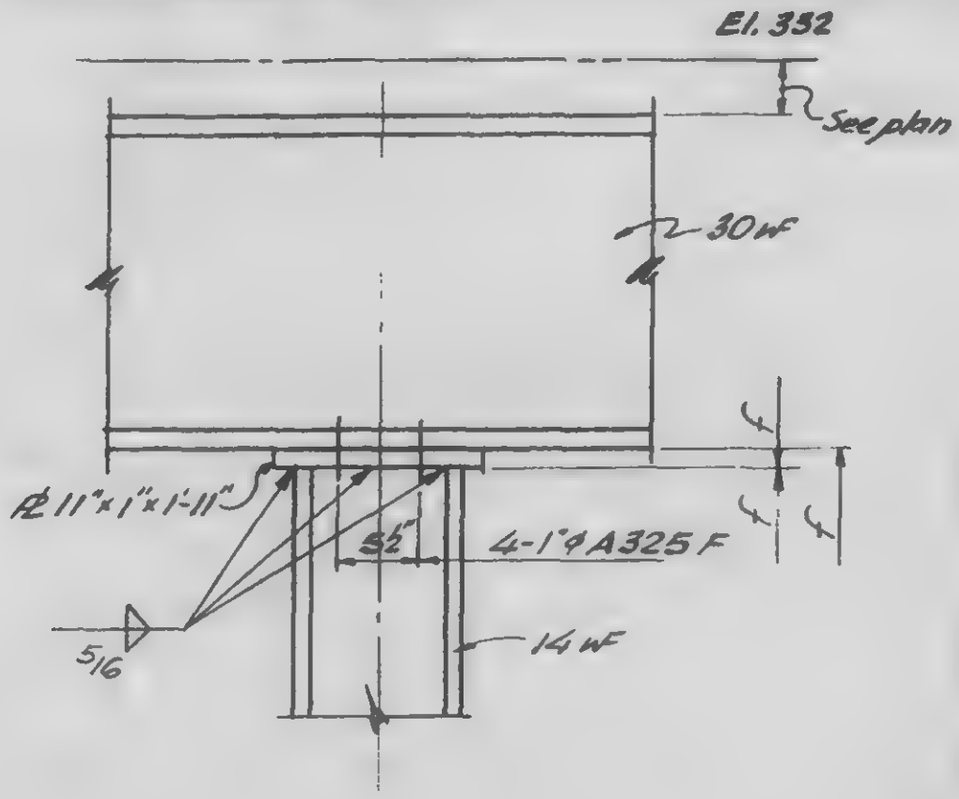

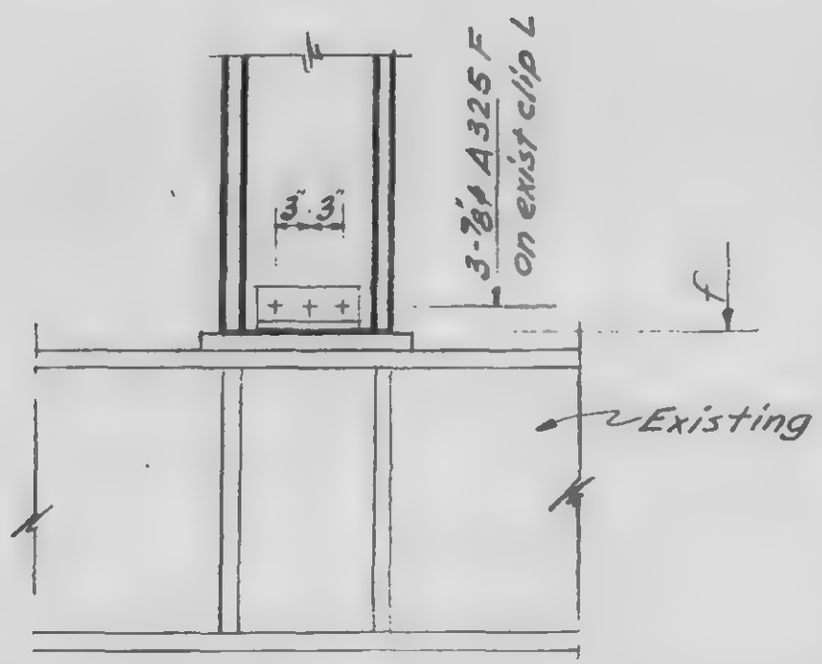

LICENSED PROFESSIONAL ENGINEER
LESLIE E. ROBERTSON
No. 34360
UNIVERSITY OF THE STATE OF NEW YORK

DESIGNED K. Chiang

DRAWN

REVIEWED

13 K2.4-16

SKILLING, HELLE, CHRISTIANSEN, ROBERTSON — Structural & Civil Engineers

PROJECT: THE WORLD TRADE CENTER

TITLE: GIRDER-FUTURE COLUMN DETAILS

DATE: 11-3-72

REVISIONS

RELEASE FOR CONSTRUCTION 11-20-72

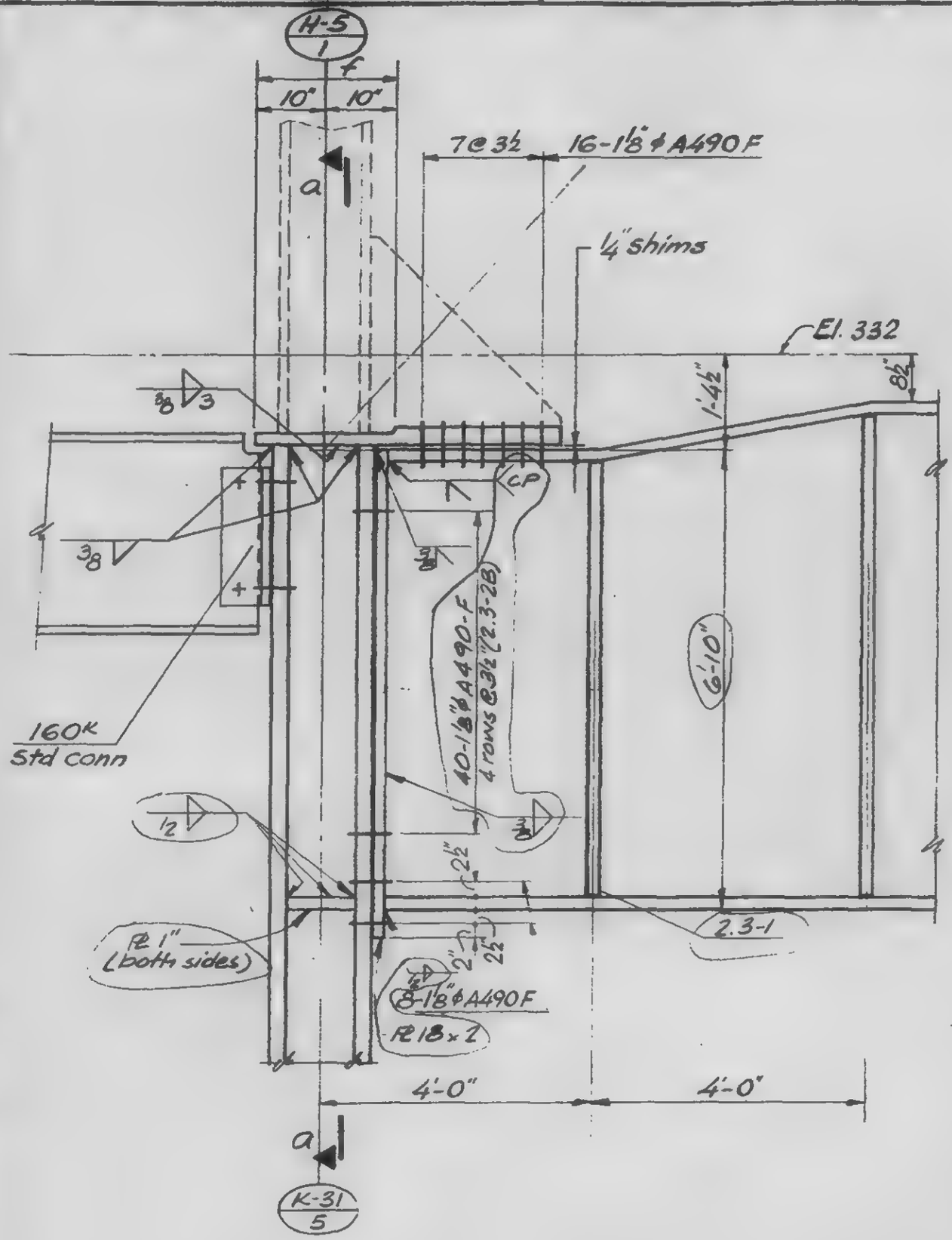

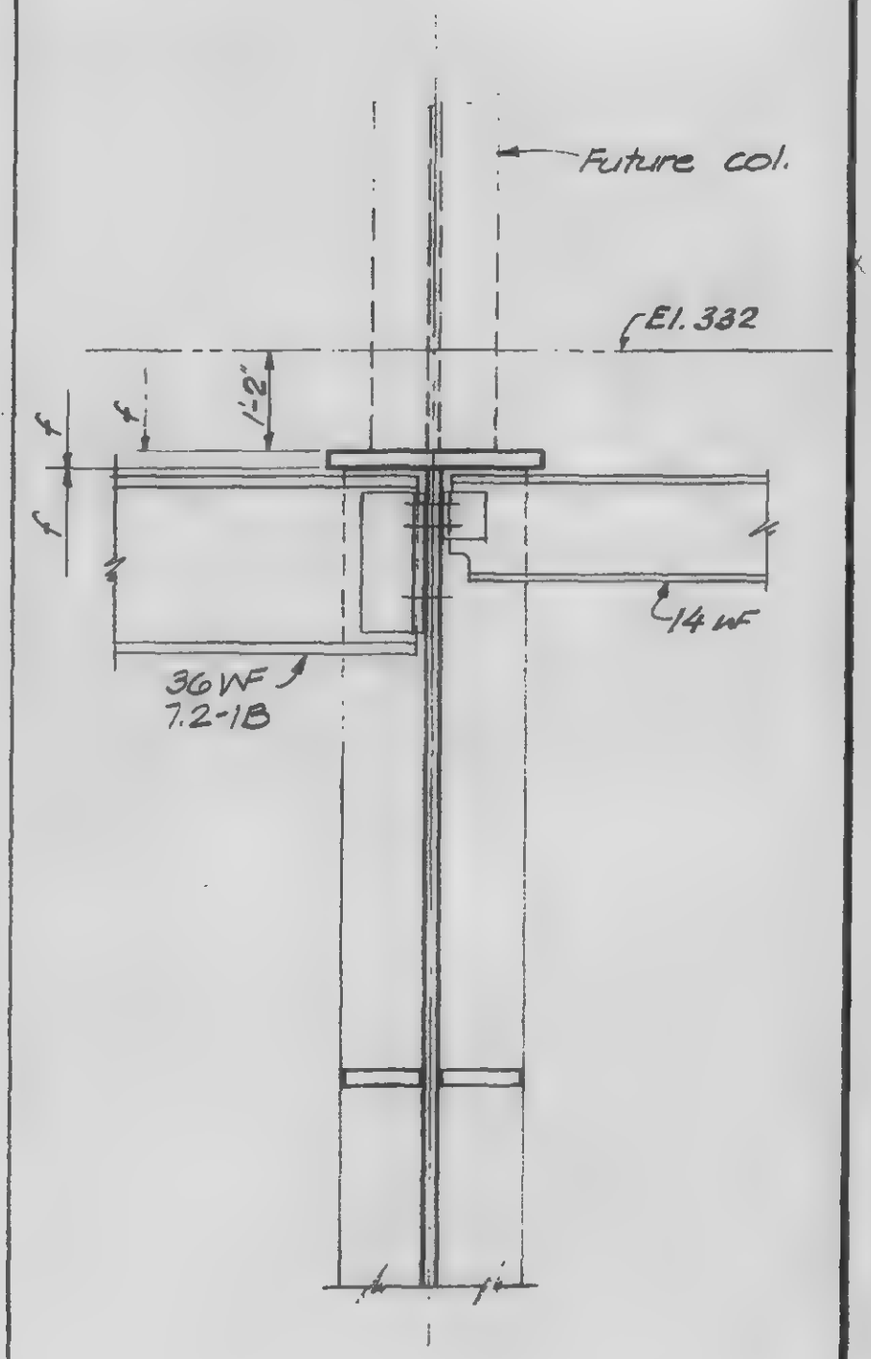

LICENSED PROFESSIONAL ENGINEER
LESLIE E. ROBERTSON
No. 34360
UNIVERSITY OF THE STATE OF NEW YORK

DESIGNED

DRAWN John Grieve

REVIEWED

A | a

13-K2.5-1

SKILLING, HELLE, CHRISTIANSEN, ROBERTSON — Structural & Civil Engineers

PROJECT: THE WORLD TRADE CENTER | TITLE: GIRDER - FUTURE CO[illegible]N DETAILS | DATE: 1-3-72

REVISIONS

[illegible]LEASE FOR CONSTRUCTION 11-20-72

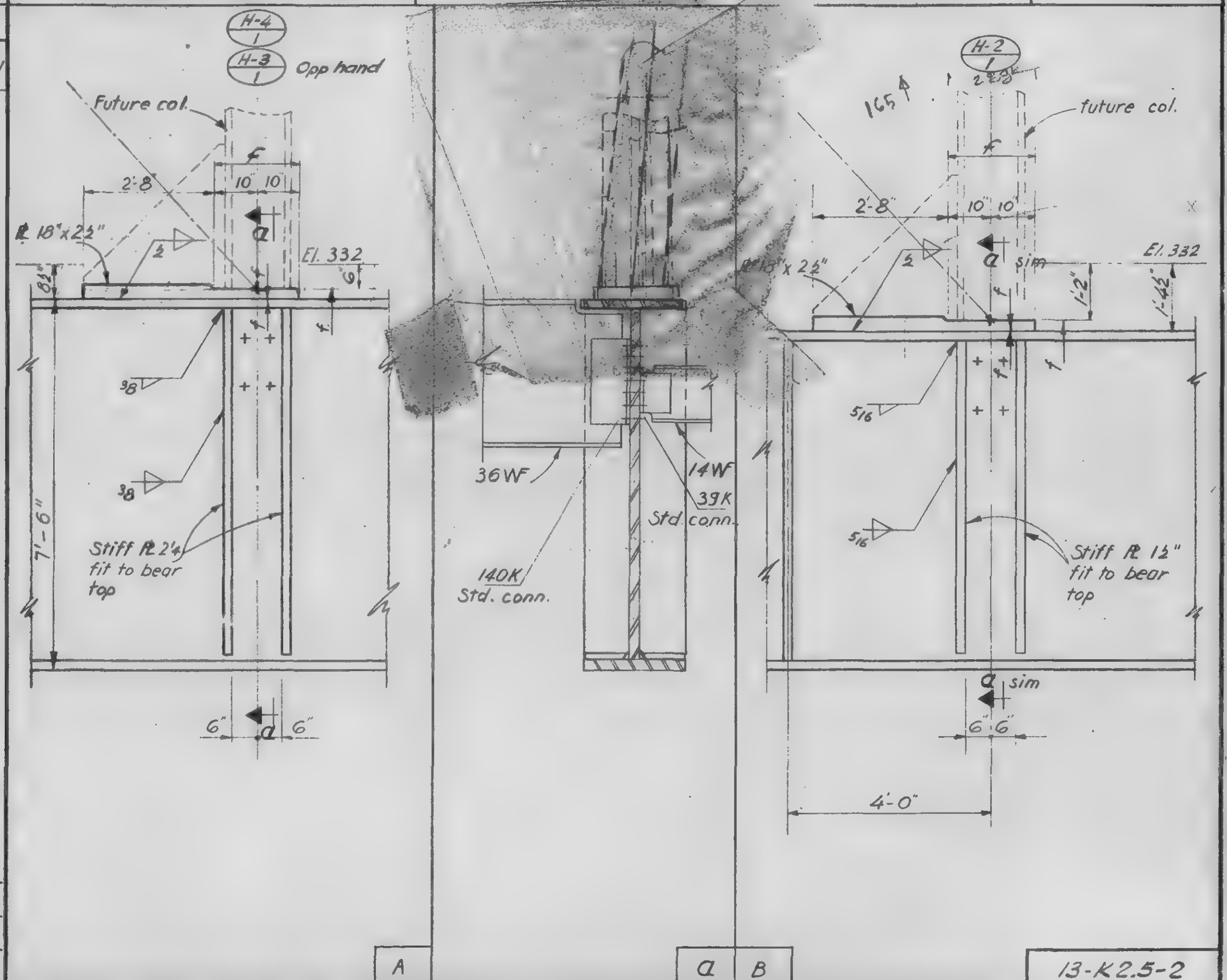

LICENSED PROFESSIONAL ENGINEER
LESLIE E. ROBERTSON
No 34360
UNIVERSITY OF THE STATE OF NEW YORK

[illegible]ESIGNED

DRAWN John Guerin

REVIEWED

13-K2.5-2

SKILLING, HELLE, CHRISTIANSEN, ROBERTSON — Structural & Civil Engineers

PROJECT THE WORLD TRADE CENTER | TITLE GIRDER - FUTURE COLUMN DETAILS | DATE 1-3-72

REVISIONS

RELEASE FOR CONSTRUCTION 11-20-72

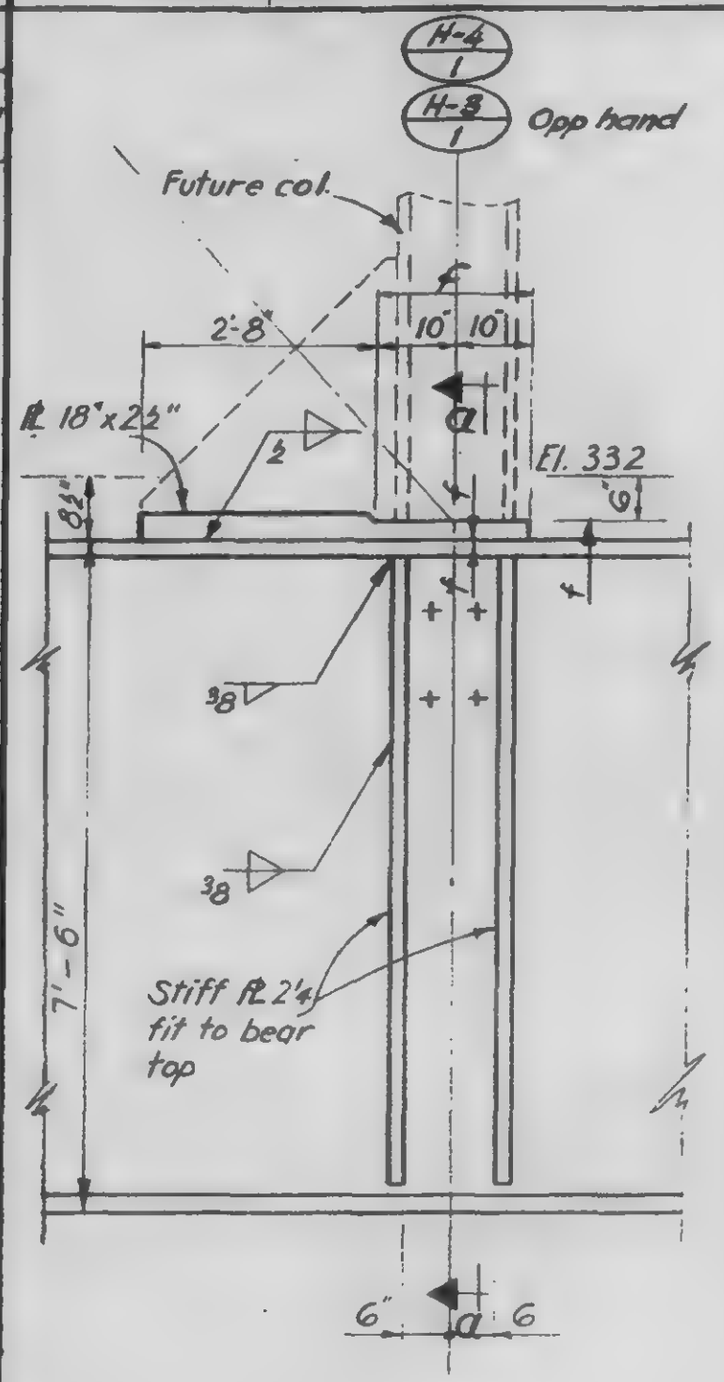

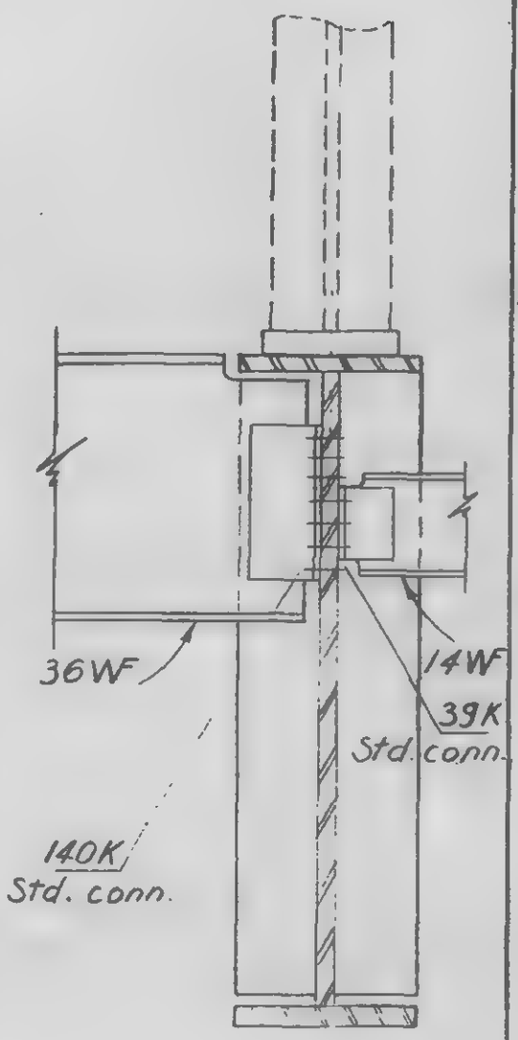

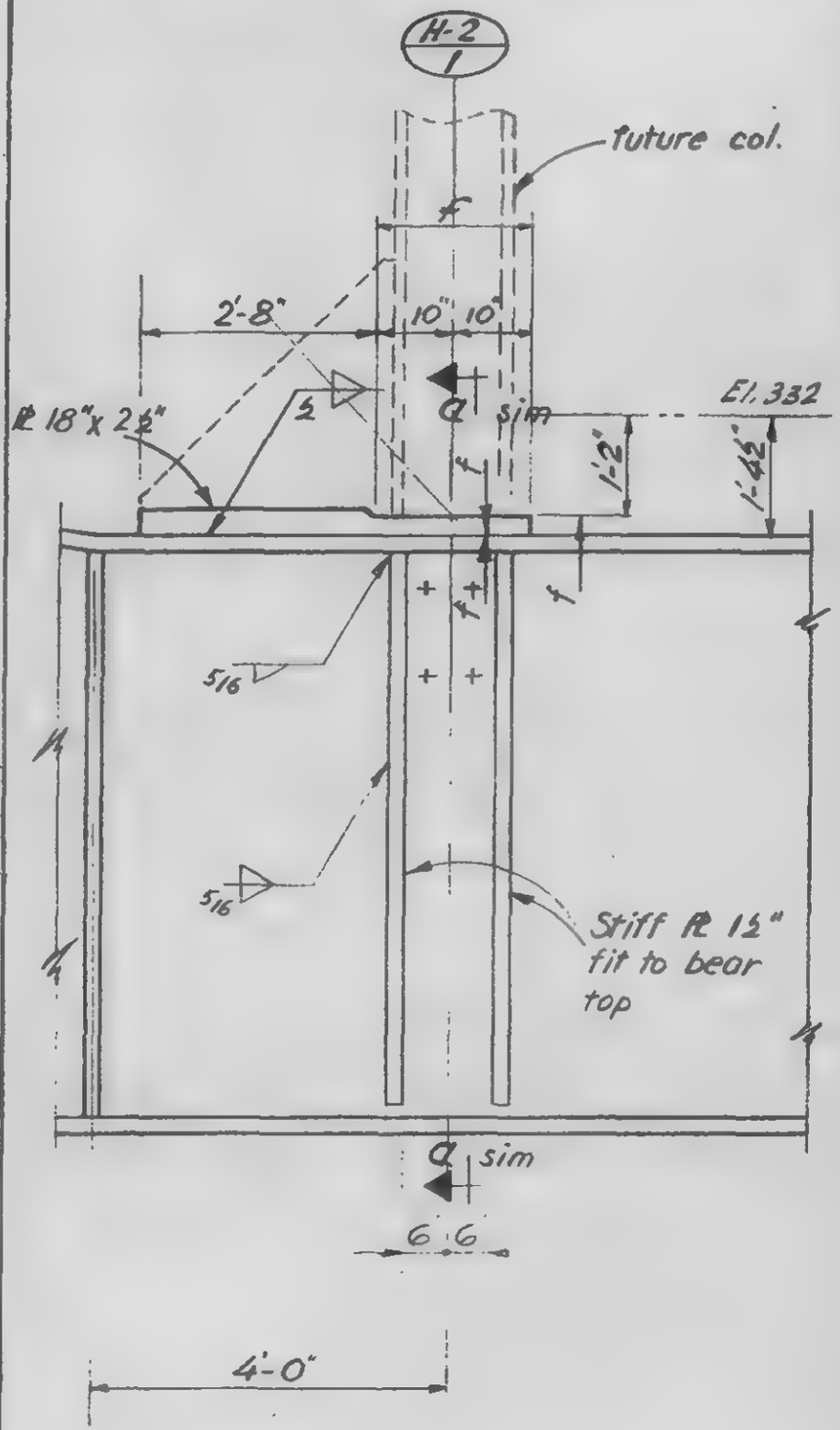

LICENSED PROFESSIONAL ENGINEER
LESLIE E. ROBERTSON
No. 34360
UNIVERSITY OF THE STATE OF NEW YORK

DESIGNED

DRAWN John Greene

REVIEWED

A | a B

13-K2.5-2

SKILLING, HELLE; CHRISTIANSEN, ROBERTSON — Structural & Civil Engineers

PROJECT: THE WORLD TRADE CENTER | TITLE: GIRDER - FUTURE COLUMN DETAILS | DATE: 11-3-72

REVISIONS

RELEASE FOR CONSTRUCTION 11-20-72

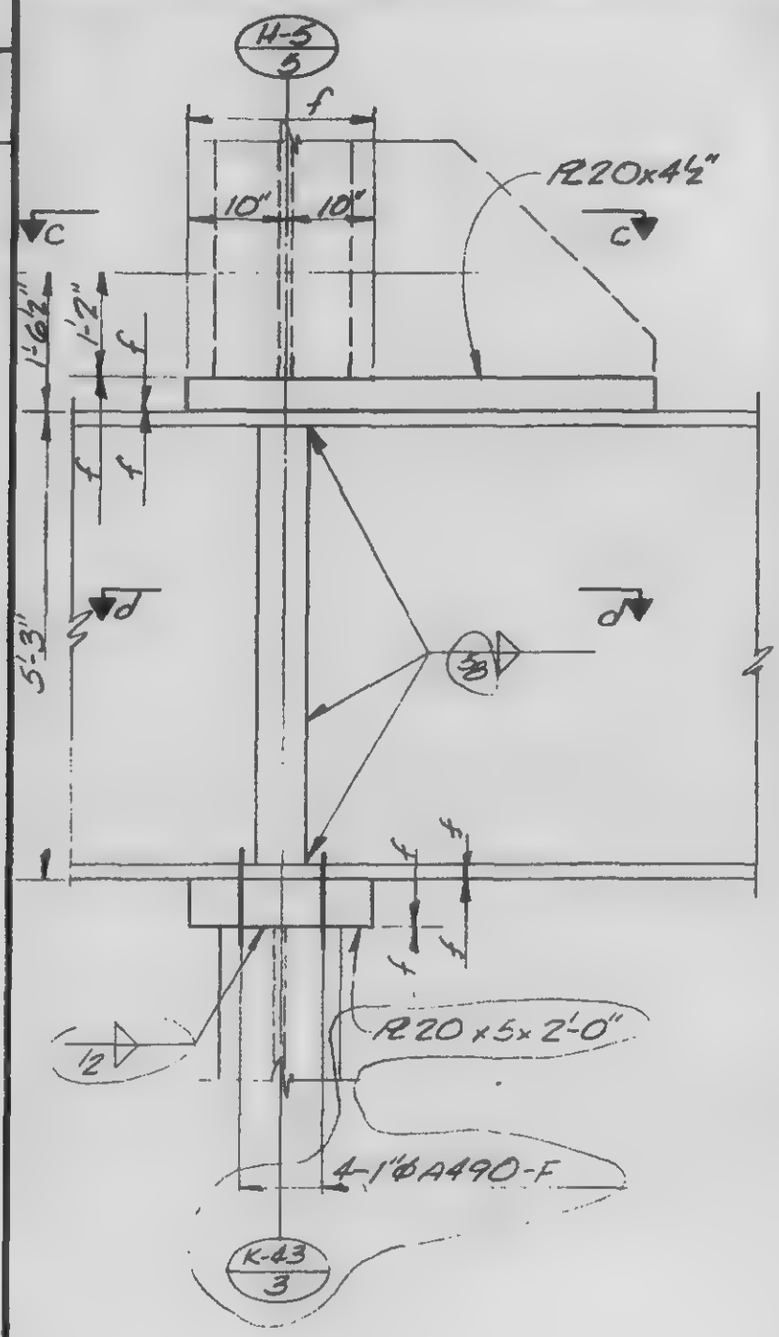

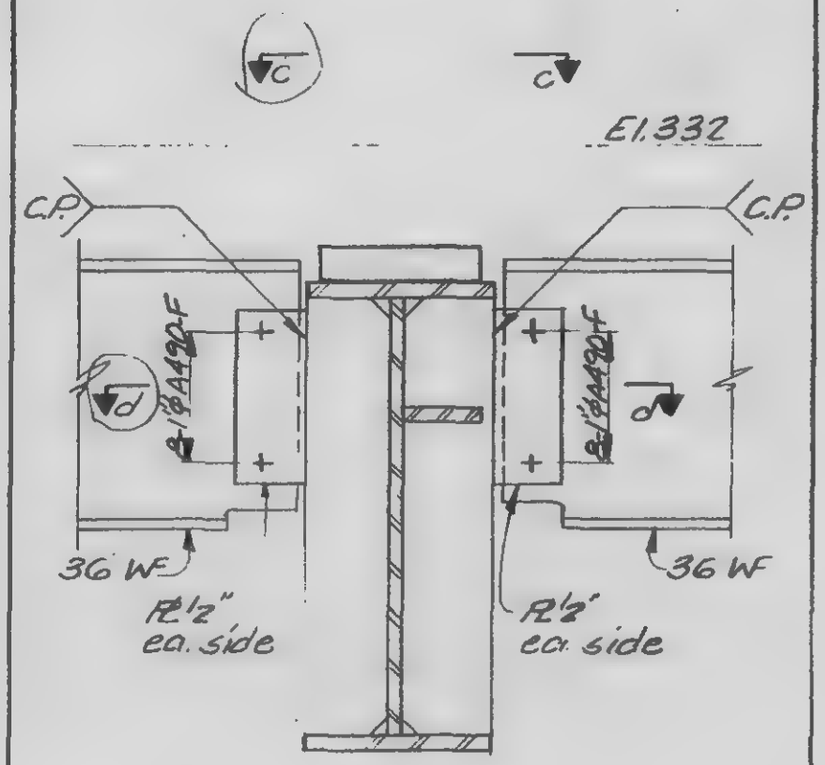

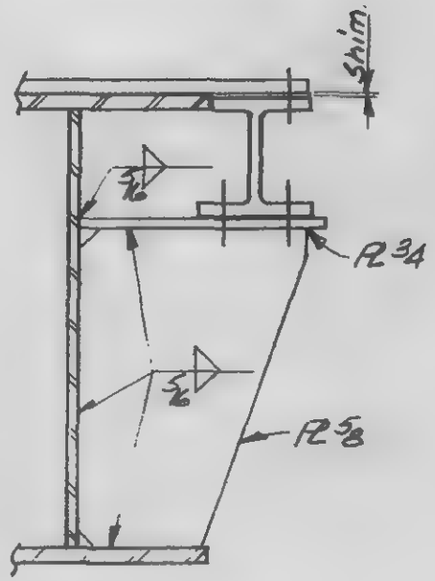

LICENSED PROFESSIONAL ENGINEER
LESLIE E. ROBERTSON
No 34360
UNIVERSITY OF THE STATE OF NEW YORK

DESIGNED

DRAWN
TR

REVIEWED

a

b

13-K2.5-3.1

SKILLING, HELLE, CHRISTIANSEN, ROBERTSON — Structural & Civil Engineers

PROJECT: THE WORLD TRADE CENTER

TITLE: GIRDER - FUTURE COLUMN DETAILS

DATE: 11-3-72

REVISIONS

RELEASE FOR CONSTRUCTION 11-20-72

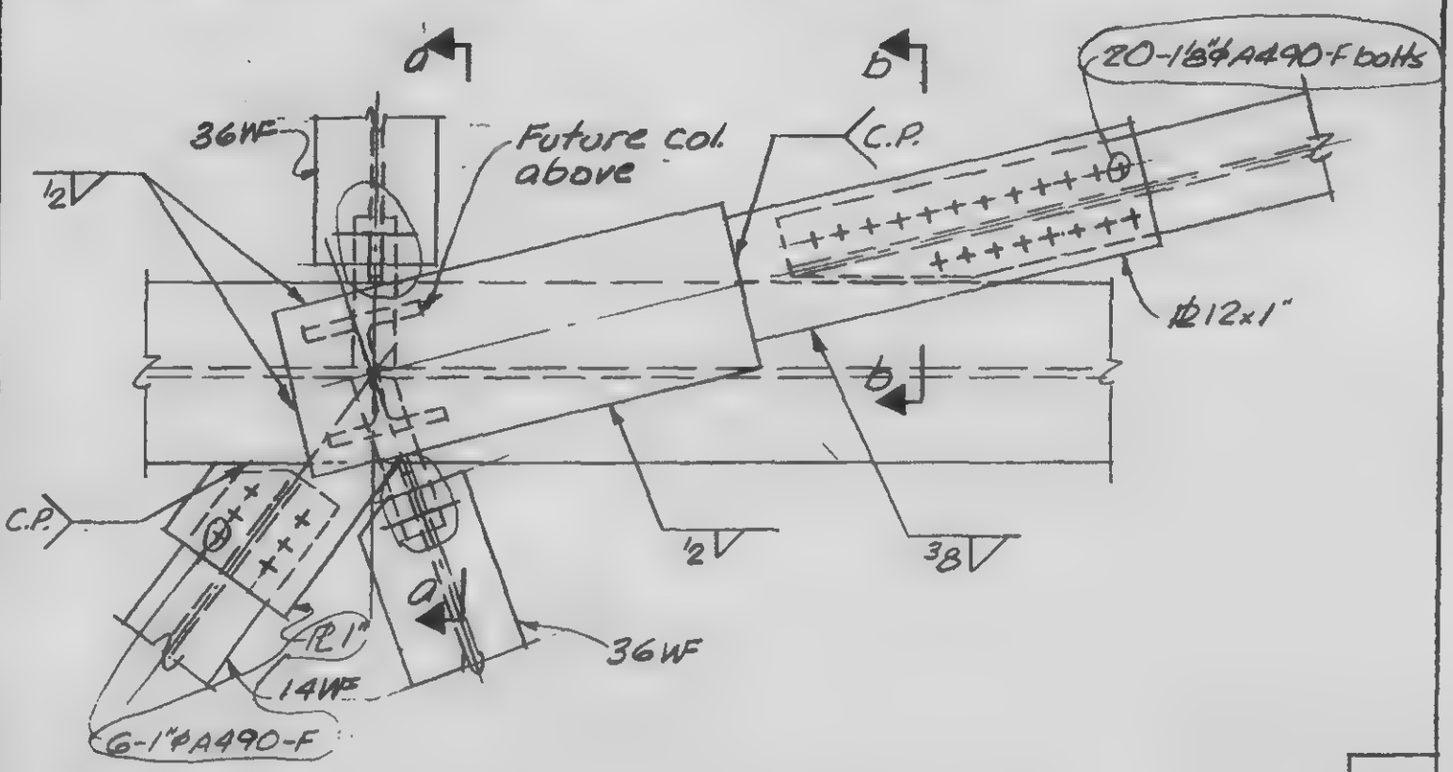

C

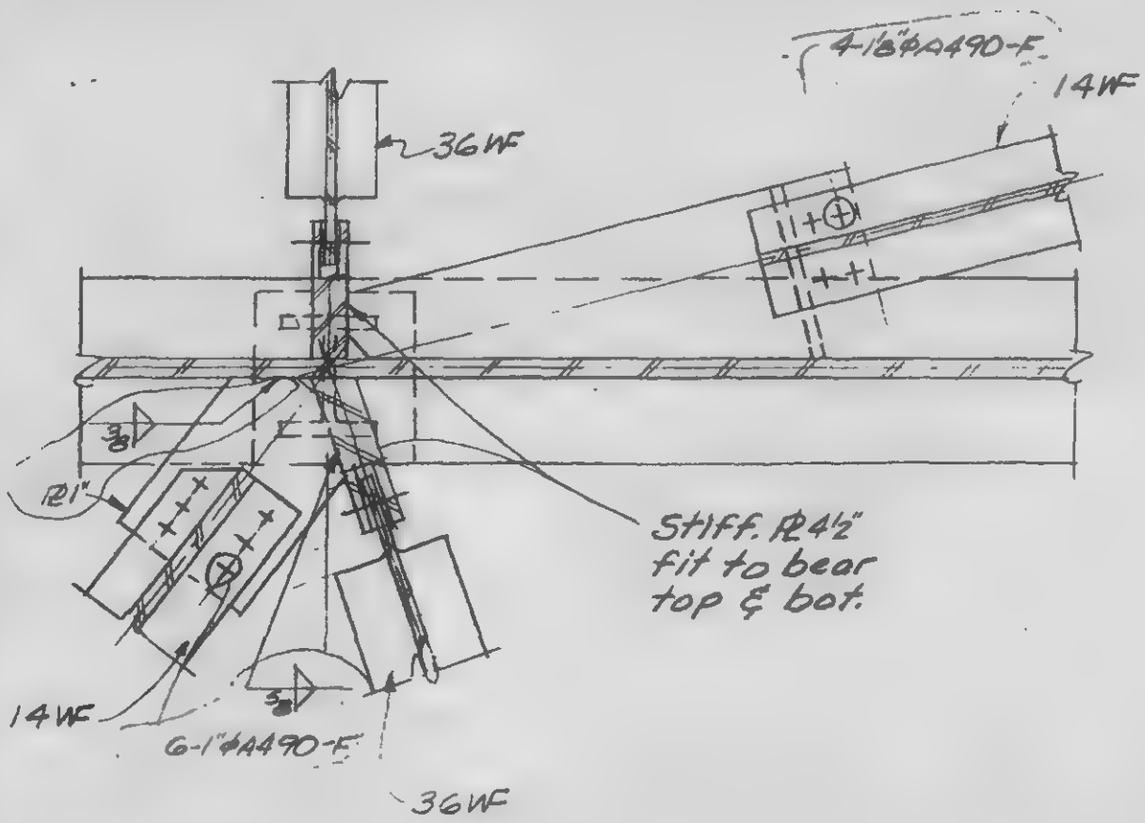

d

LICENSED PROFESSIONAL ENGINEER
LESLIE E. ROBERTSON
No 34960
UNIVERSITY OF THE STATE OF NEW YORK

DESIGNED

DRAWN A.L. Frangui

REVIEWED

13-K2.5-3.2

SKILLING, HELLE, CHRISTIANSEN, ROBERTSON — Structural & Civil Engineers

PROJECT: THE WORLD TRADE CENTER

TITLE: GIRDER - FUTURE COLUMN DETAILS

DATE: 11-3-72

REVISIONS

RELEASE FOR CONSTRUCTION 11-20-72

6-20-73

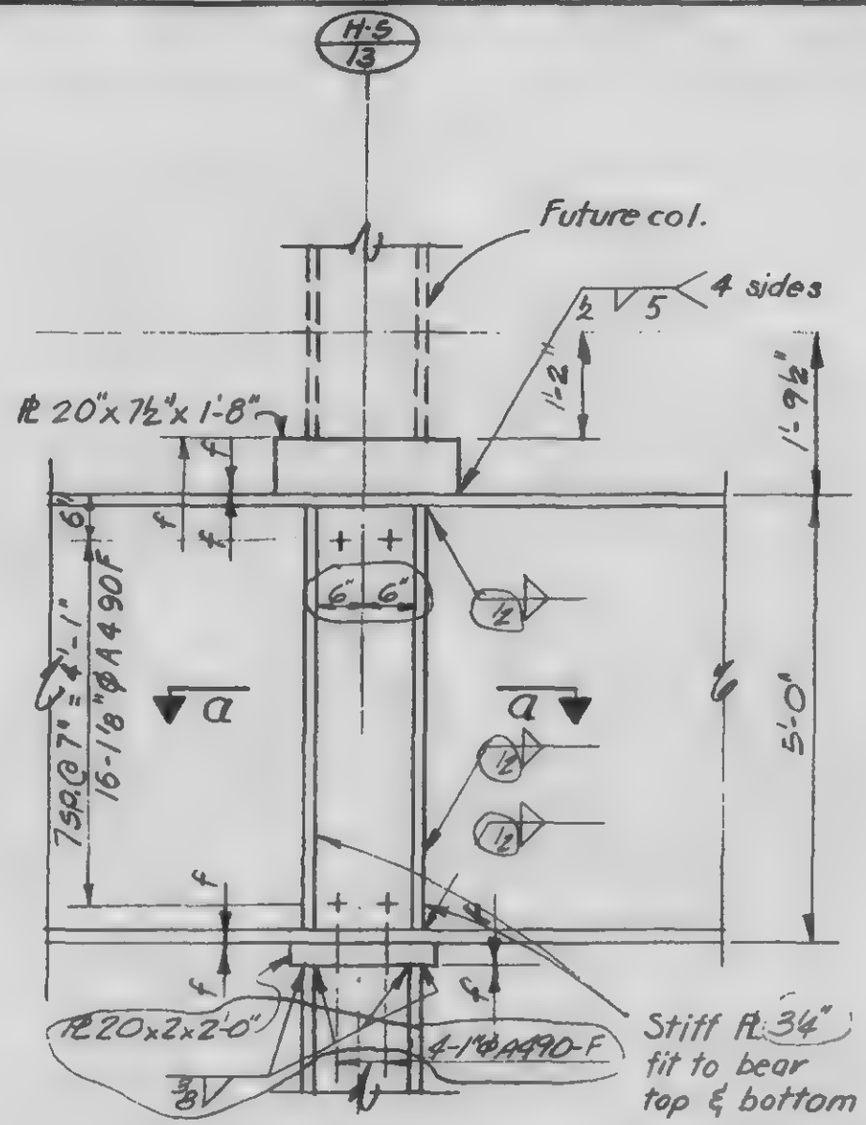

K-57 / 2

A

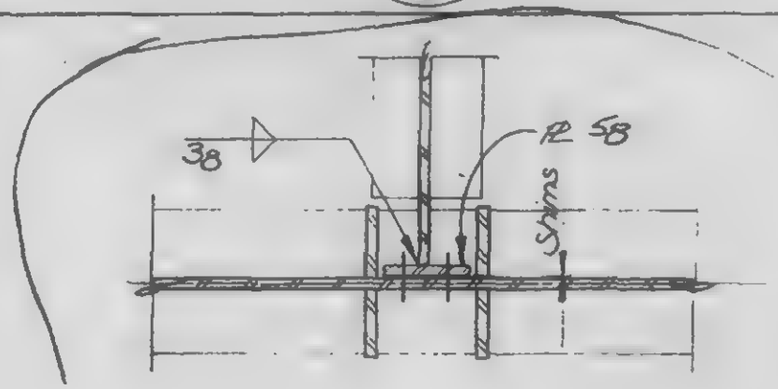

a

LICENSED PROFESSIONAL ENGINEER — LESLIE E. ROBERTSON — No 34360 — UNIVERSITY OF THE STATE OF NEW YORK

DESIGNED

DRAWN

REVIEWED

13-K2.5-4

SKILLING, HELLE, CHRISTIANSEN, ROBERTSON — Structural & Civil Engineers

PROJECT: THE WORLD TRADE CENTER

TITLE: GIRDER - FUTURE COLUMN DETAILS

DATE: 11-3-73

REVISIONS

General Revision Released for Construction 11-20-72

12-11-72

4-20-73

6-20-73

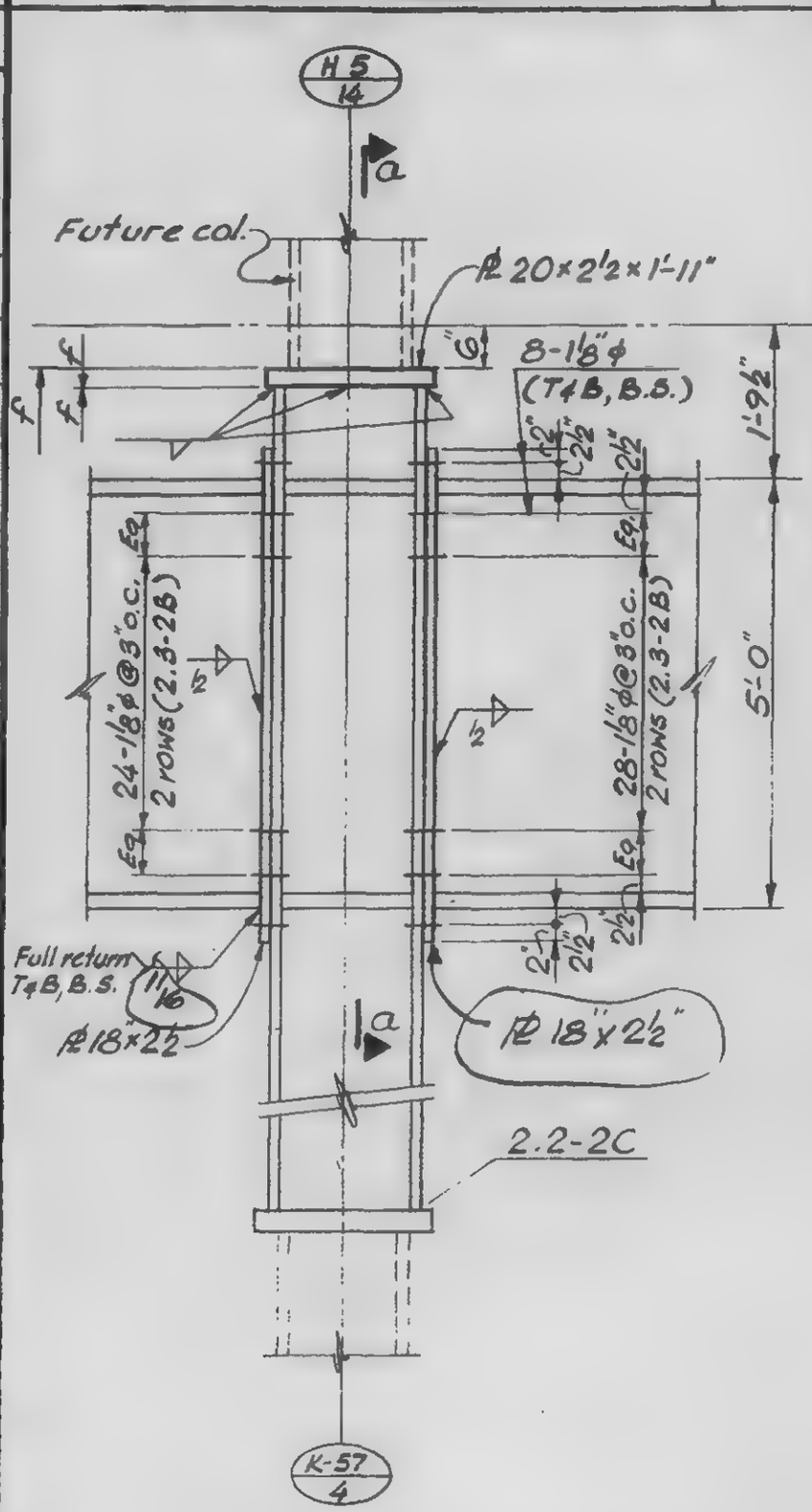

Note:
All bolts to be A490 X

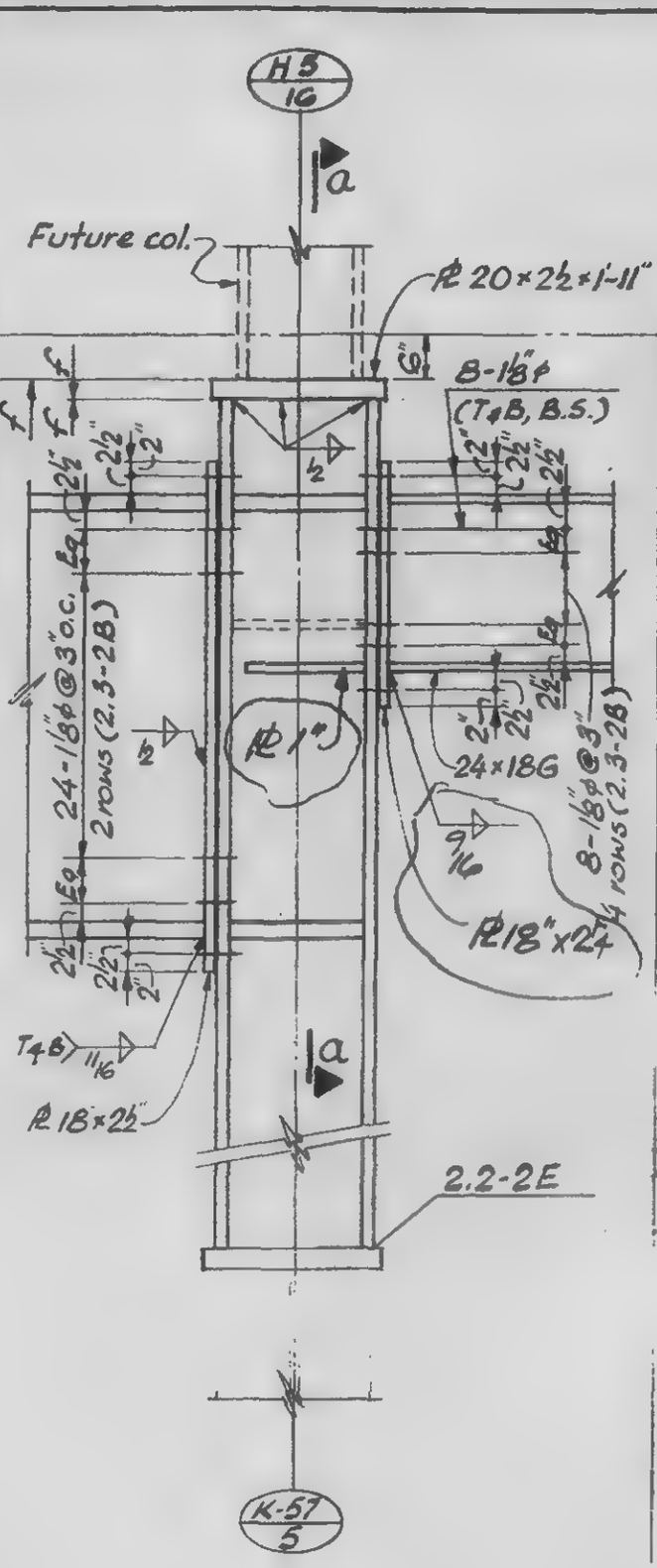

Note:
All bolts to be A490 X

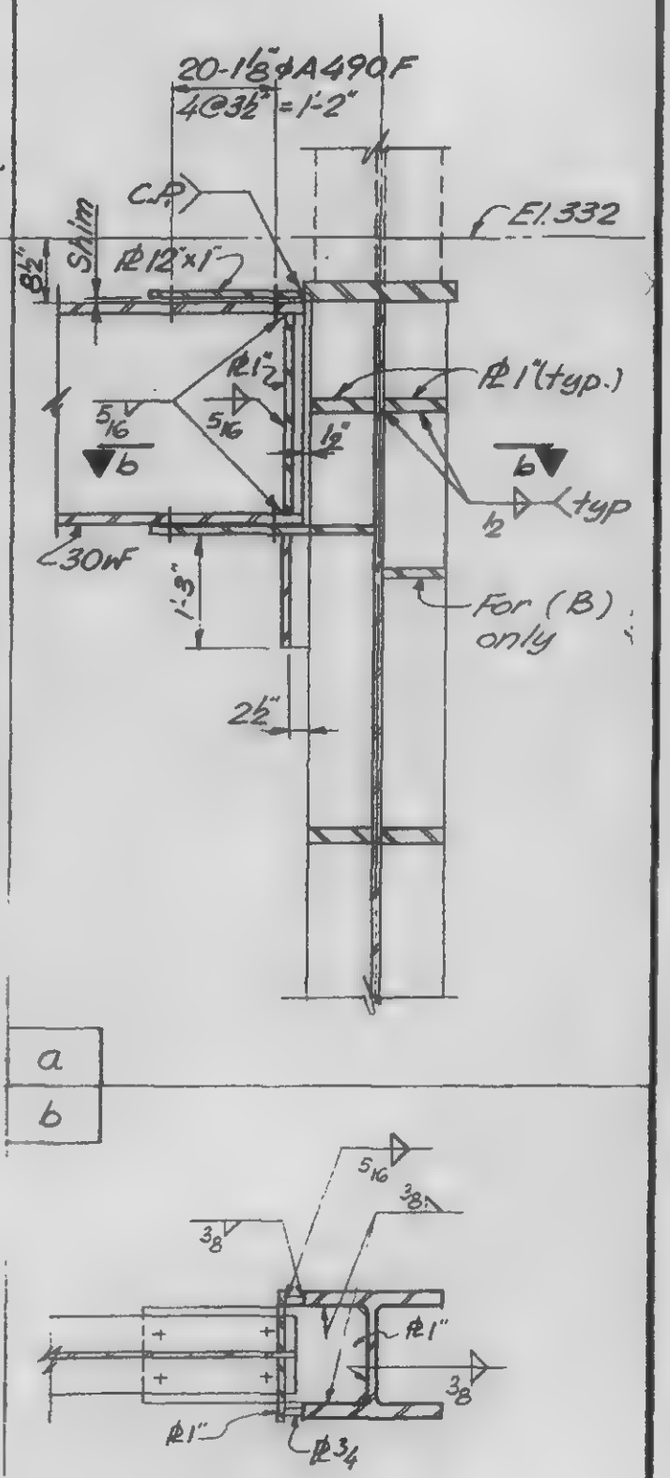

LICENSED PROFESSIONAL ENGINEER
LESLIE E. ROBERTSON
No. 34360
UNIVERSITY OF THE STATE OF NEW YORK

DESIGNED: K. Chiang

DRAWN: John Gracias

REVIEWED

A | B

13-K2.5-5

SKILLING, HELLE, CHRISTIANSEN, ROBERTSON — Structural & Civil Engineers

PROJECT: THE WORLD TRADE CENTER | TITLE: GIRDER FUTURE COLUMN DETAILS | DATE: 11-3-72

REVISIONS

Released for construction 11-20-72

4-20-73

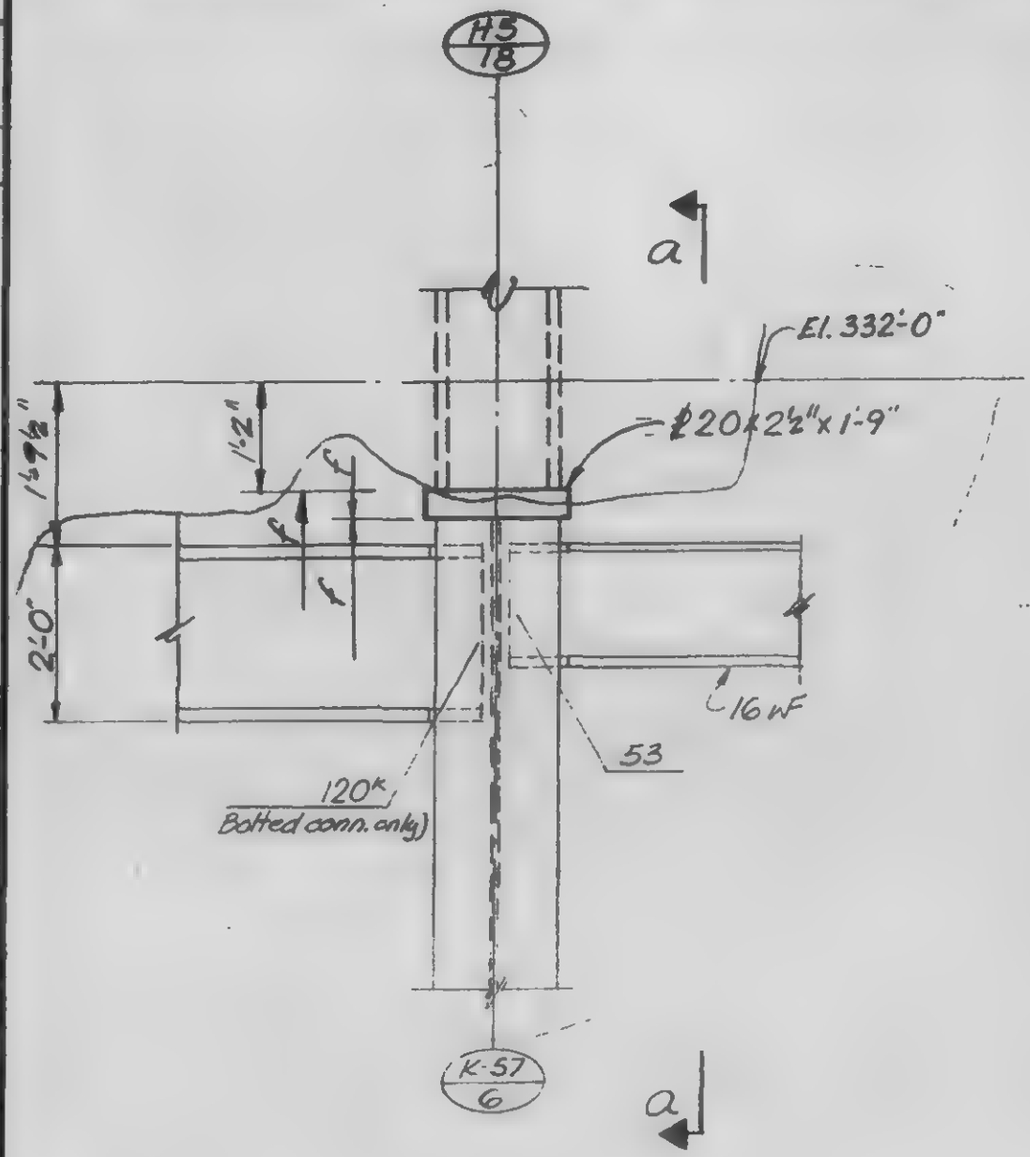

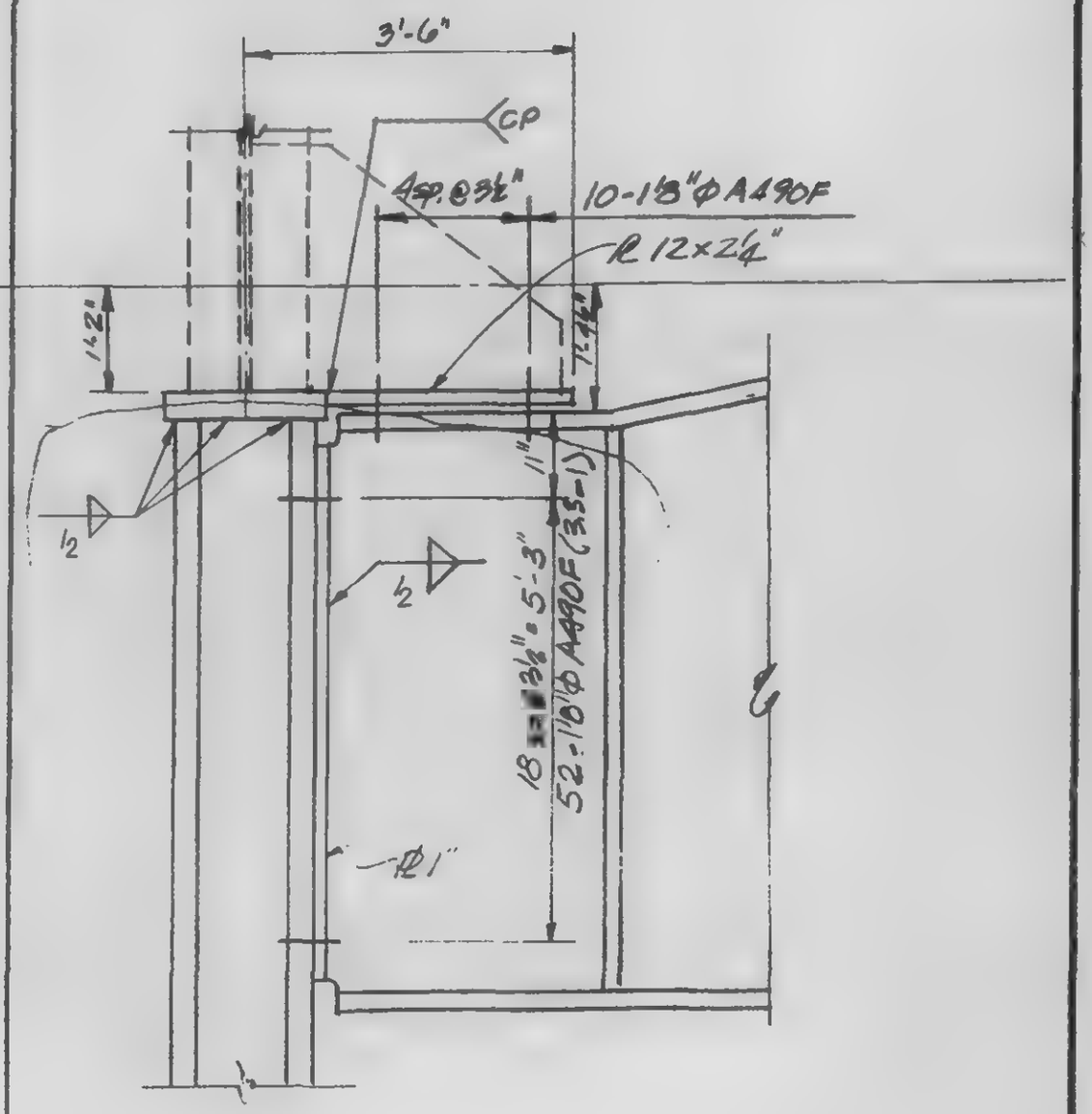

LICENSED PROFESSIONAL ENGINEER — LESLIE E. ROBERTSON — No 34300 — UNIVERSITY OF THE STATE OF NEW YORK

DESIGNED K. Chiang

DRAWN

REVIEWED

A | a

13-K2.5-6

SKILLING, HELLE, CHRISTIANSEN, ROBERTSON — Structural & Civil Engineers

PROJECT: THE WORLD TRADE CENTER | TITLE: GIRDER FUTURE _ COLUMN DETAILS | DATE: 11-3-72

REVISIONS

Released for construction 11-20-72

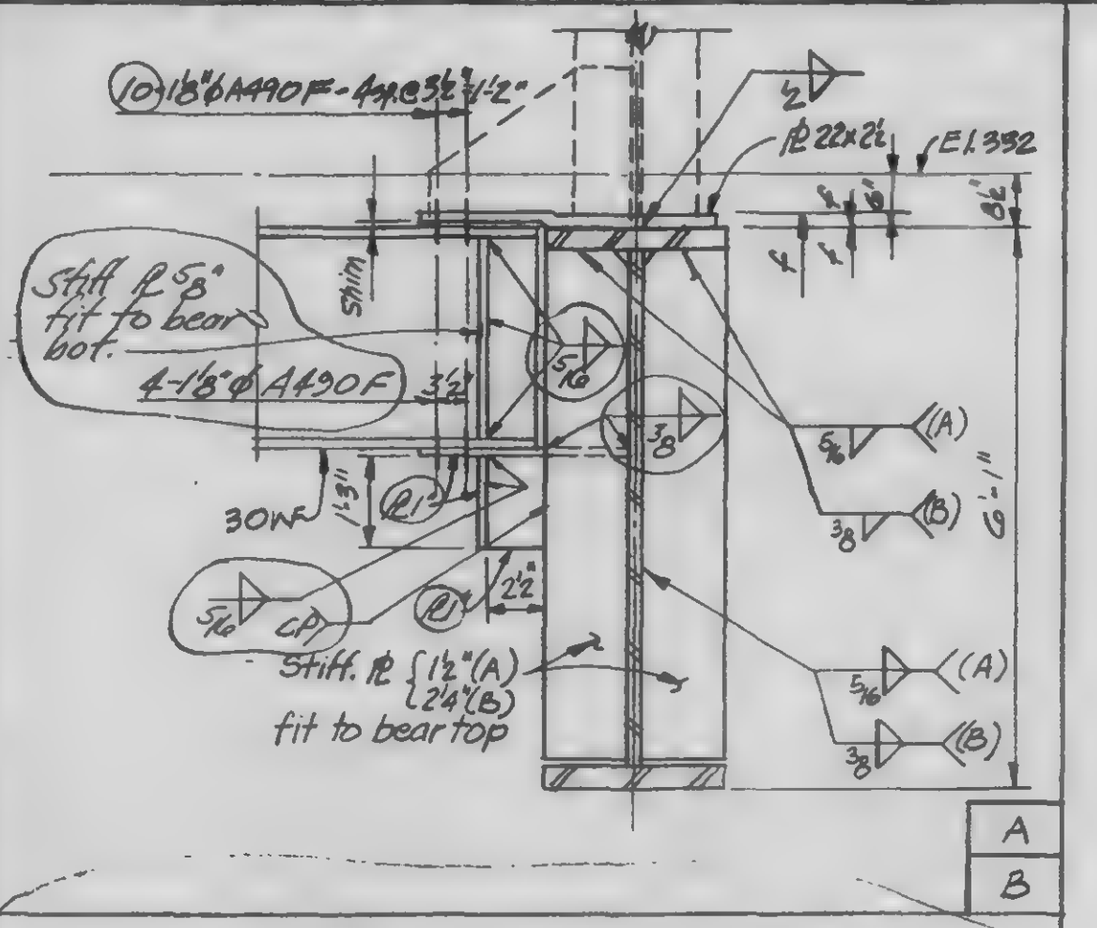

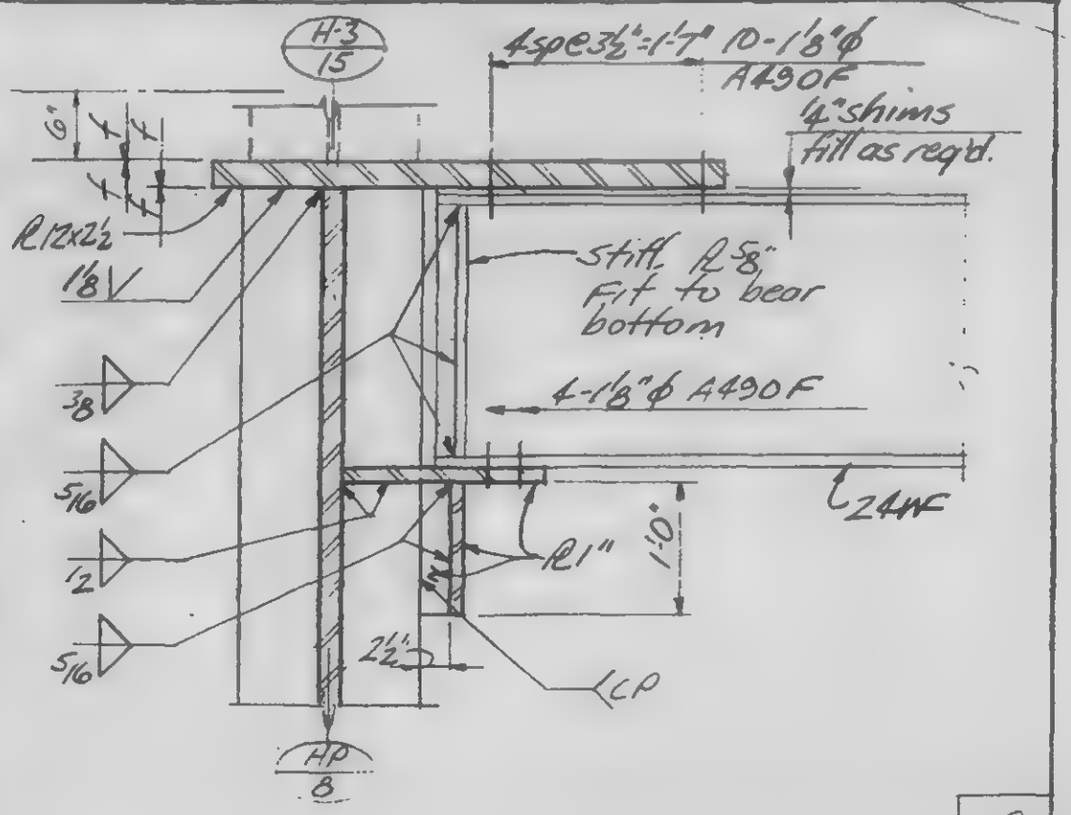

LICENSED PROFESSIONAL ENGINEER — LESLIE E. ROBERTSON — No 34360 — UNIVERSITY OF THE STATE OF NEW YORK

DESIGNED

DRAWN

REVIEWED

13-K2.5-7

SKILLING, HELLE, CHRISTIANSEN, ROBERTSON — Structural & Civil Engineers

PROJECT: THE WORLD TRADE CENTER | TITLE: GIRDER ELEVATIONS | DATE: 11-3-72

REVISIONS

Release for construction 11-20-72

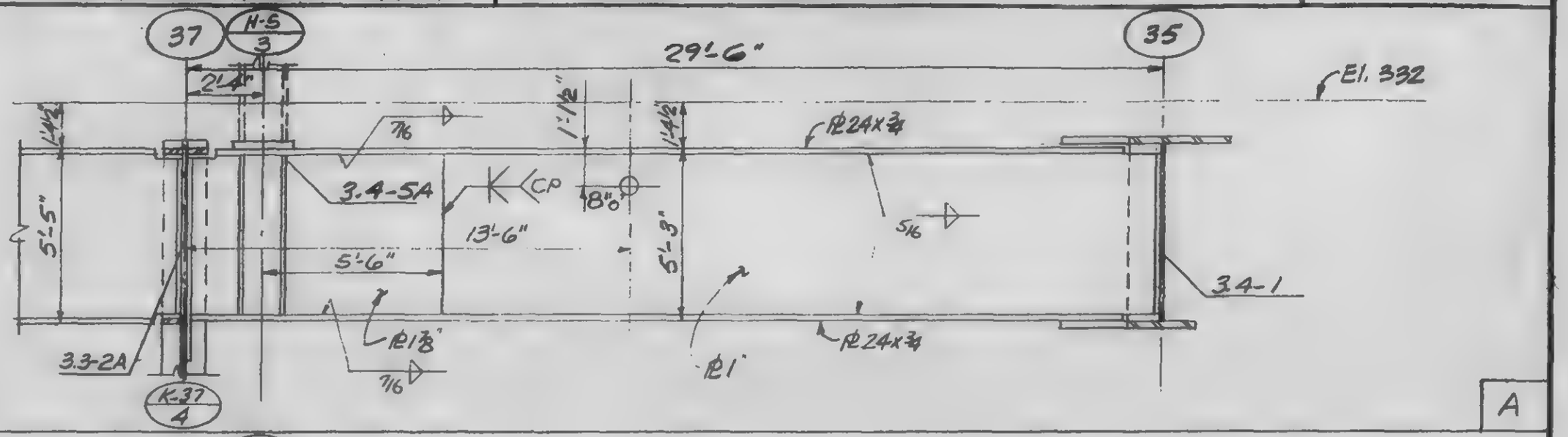

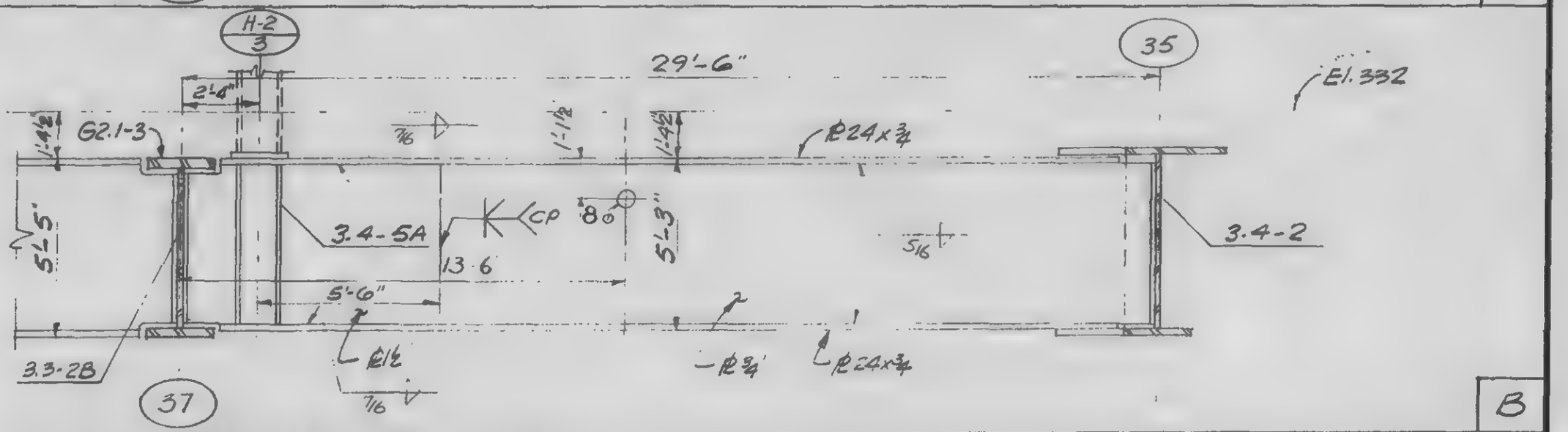

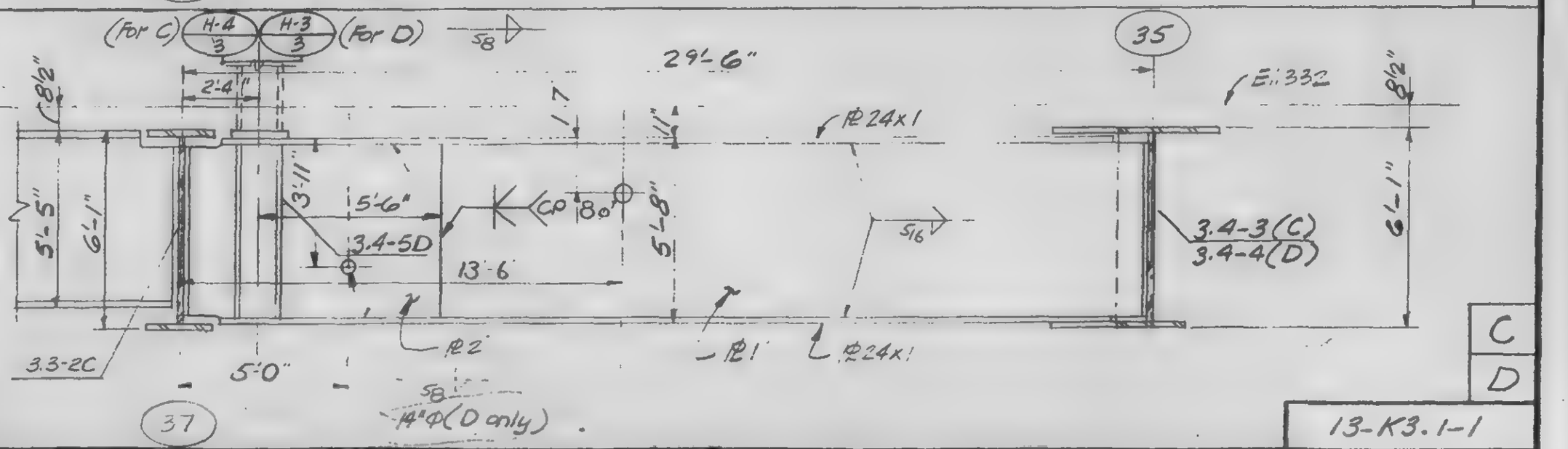

LICENSED PROFESSIONAL ENGINEER
LESLIE E. ROBERTSON
No 34360
UNIVERSITY OF THE STATE OF NEW YORK

DESIGNED

DRAWN
A.L. Franqui

REVIEWED

13-K3.1-1

SKILLING/HELLE/CHRISTIANSEN ROBERTSON Structural & Civil Engineers

PROJECT THE MOBILE BRIDGE CENTER | TITLE GIRDER ELEVATIONS | DATE 11-3-72

REVISIONS

Released for construction 11-20-72

12-11-72

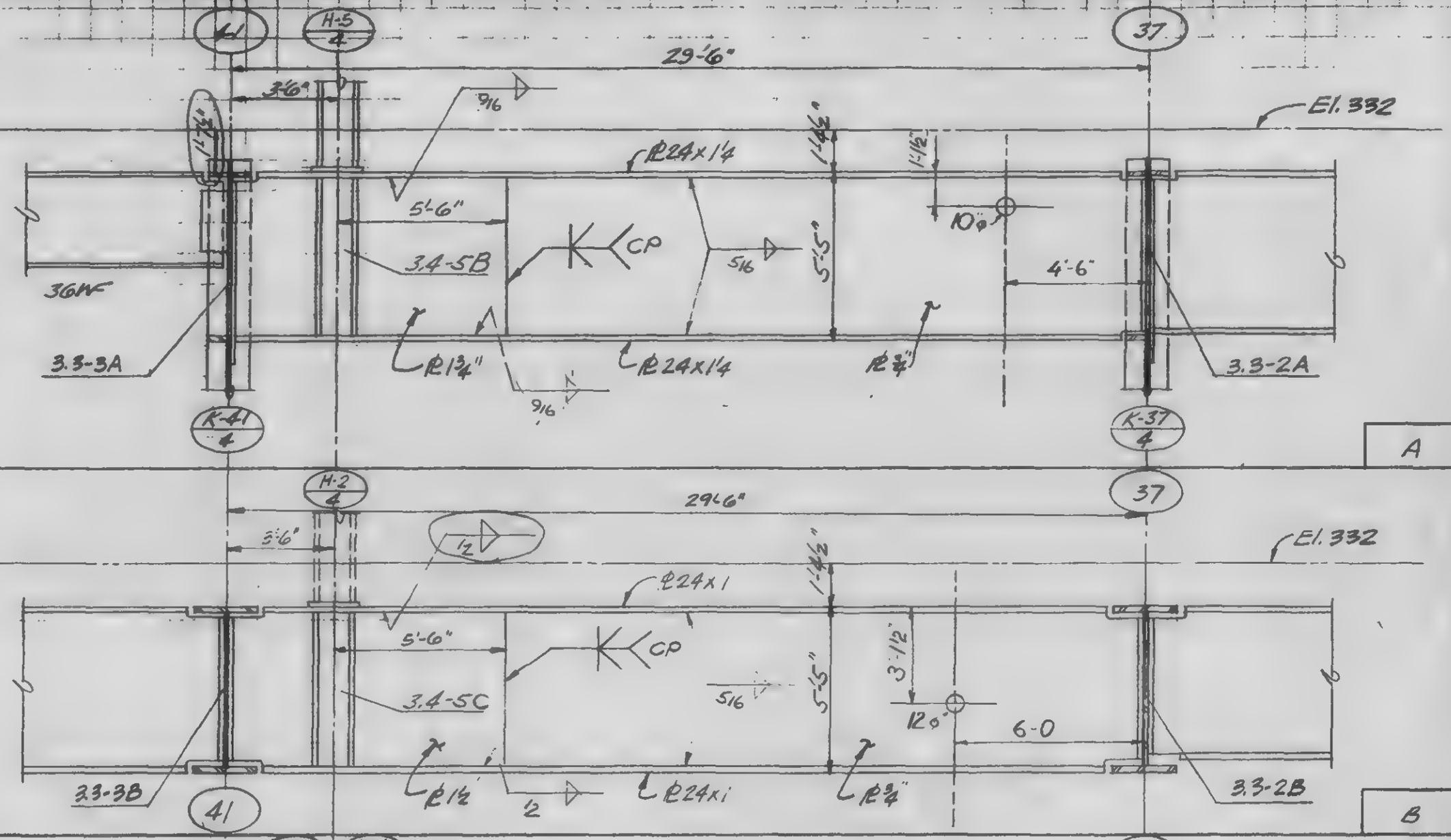

LICENSED PROFESSIONAL ENGINEER LESLIE E. ROBERTSON No. 24360 UNIVERSITY OF THE STATE OF NEW YORK

DESIGNED

DRAWN

REVIEWED

SKILLING, HELLE, CHRISTIANSEN, ROBERTSON — Structural & Civil Engineers

PROJECT: THE WORLD TRADE CENTER | TITLE: GIRDER ELEVATIONS | DATE: 11-3-72

EVISIONS

Release for construction 11-20-72

12-11-72

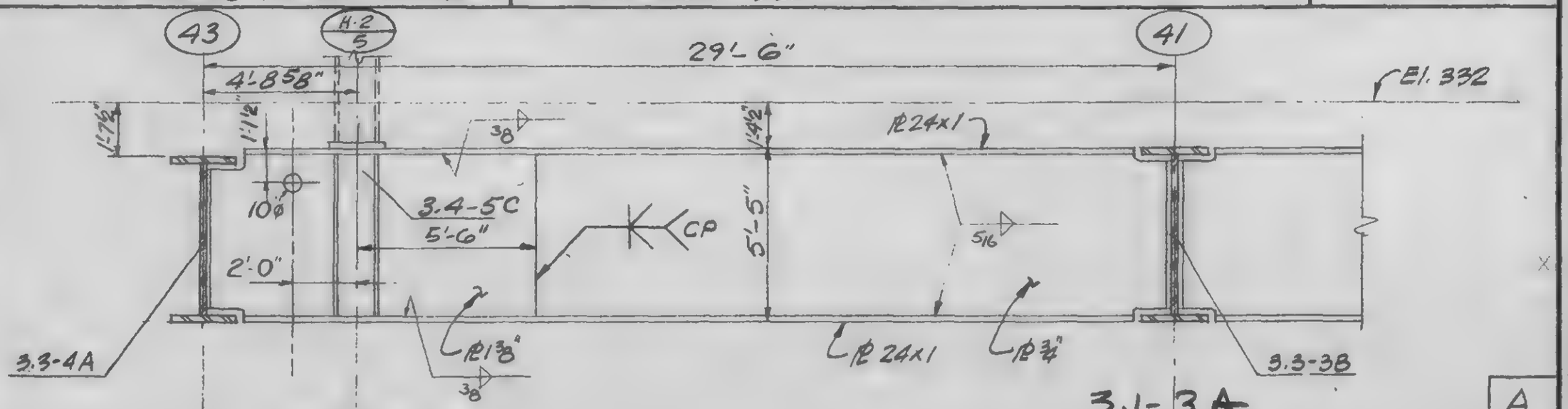

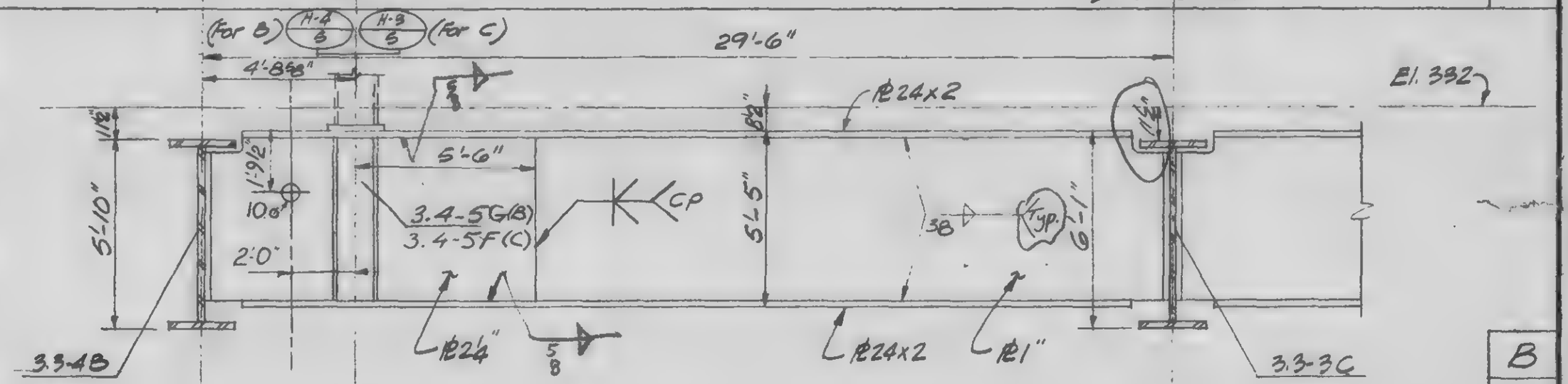

LICENSED PROFESSIONAL ENGINEER — LESLIE E. ROBERTSON — NO 34360 — UNIVERSITY OF THE STATE OF NEW YORK

SIGNED

DRAWN: A.L. Franqui

REVIEWED

13-K3.1-3

SKILLING, HELLE, CHRISTIANSEN, ROBERTSON — Structural & Civil Engineers

PROJECT: THE WORLD TRADE CENTER | TITLE: GIRDER ELEVATIONS | DATE: 11-3-72

REVISIONS

Release for construction 11-20-72

12-11-72

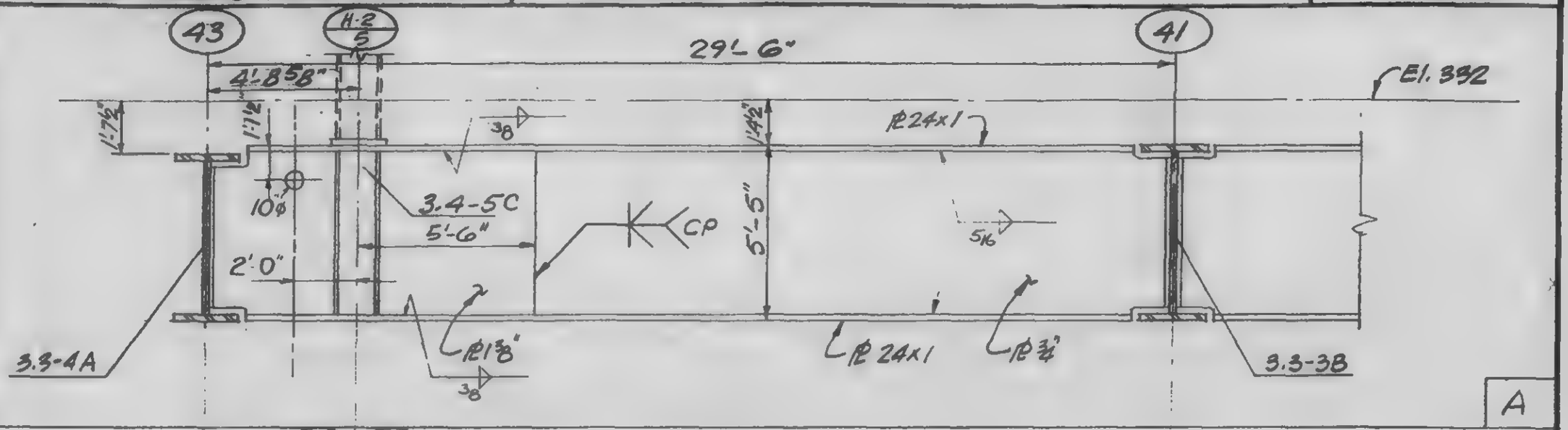

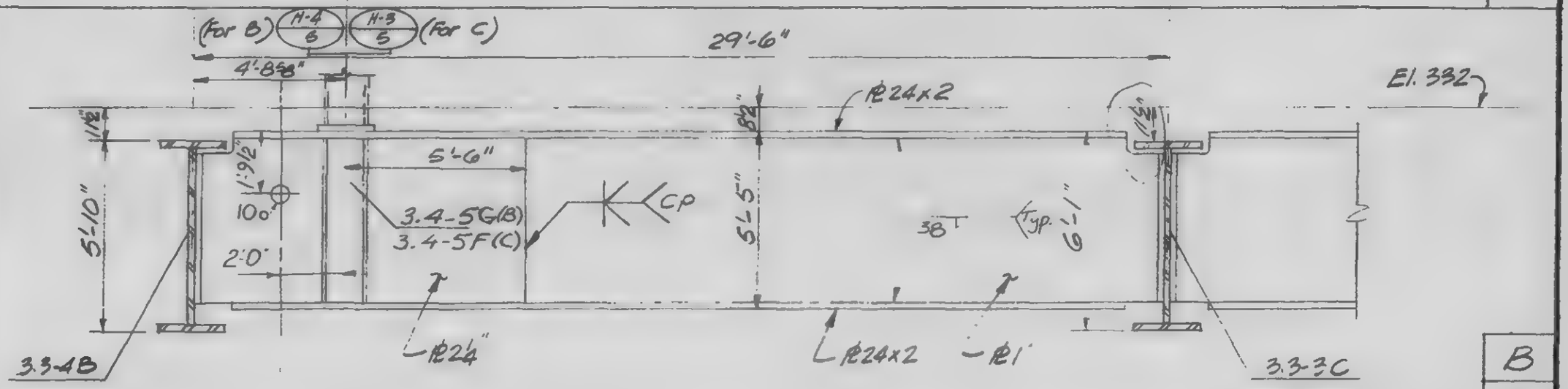

LICENSED PROFESSIONAL ENGINEER — LESLIE E. ROBERTSON — No 34360 — UNIVERSITY OF THE STATE OF NEW YORK

DESIGNED

DRAWN A.L. Franqui

13-K3.1-3

SKILLING, HELLE, CHRISTIANSEN, ROBERTSON — Structural & Civil Engineers

PROJECT: THE WORLD TRADE CENTER | TITLE: GIRDER ELEVATIONS | DATE: 11-3-72

REVISIONS

Released for construction 11-20-72

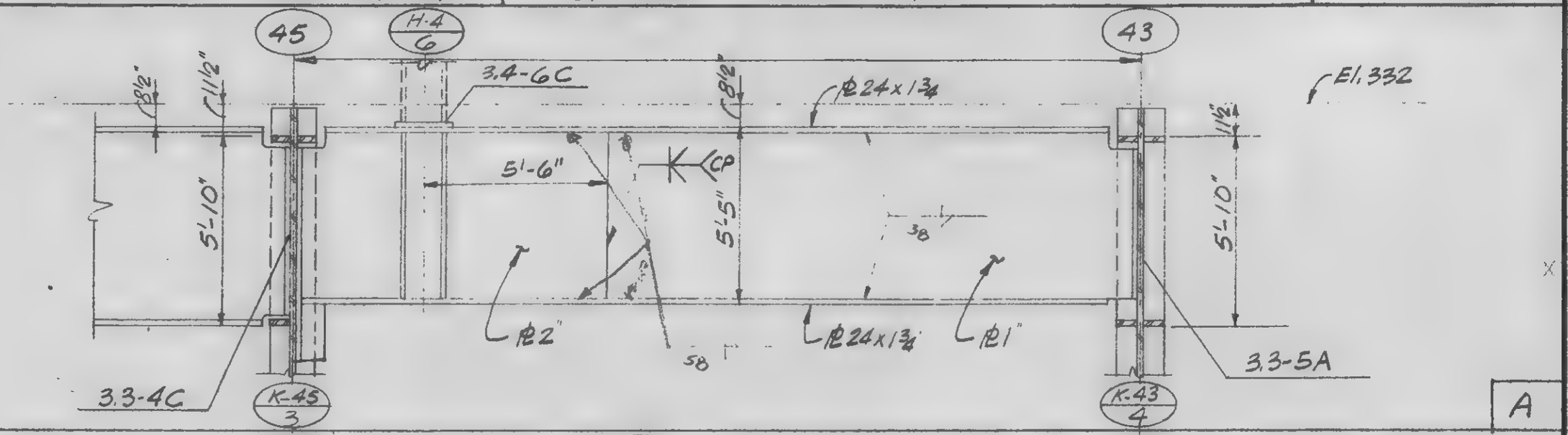

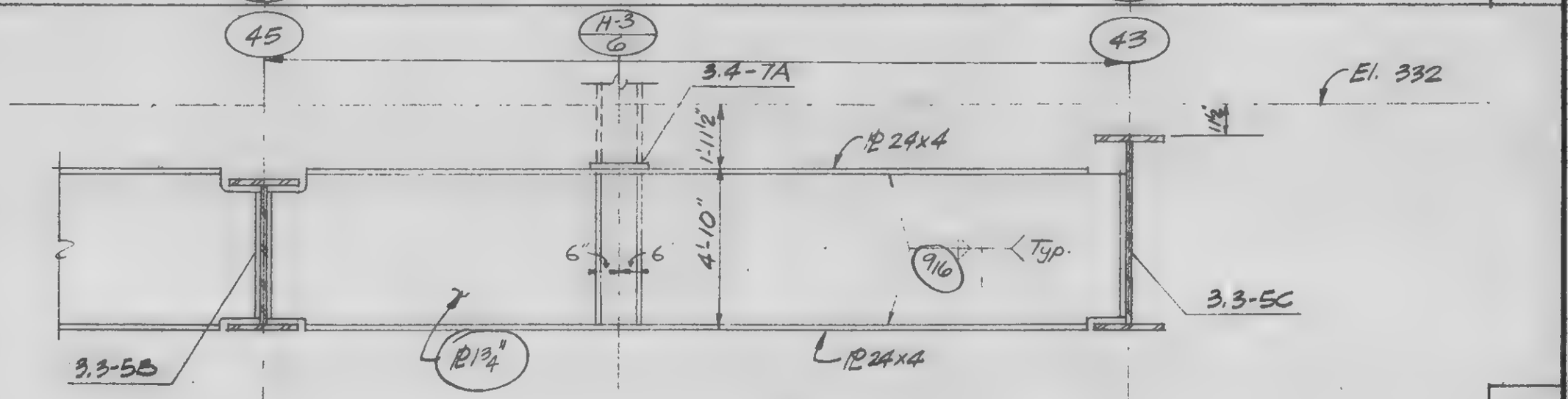

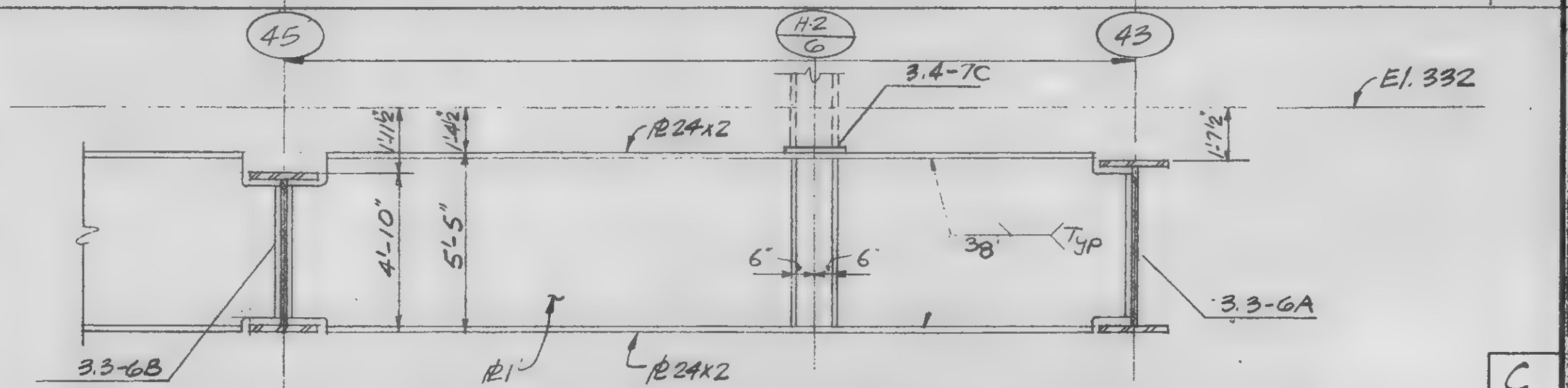

3.1-4C

13-K3.1-4

LICENSED PROFESSIONAL ENGINEER — LESLIE E. ROBERTSON — No 34360 — UNIVERSITY OF THE STATE OF NEW YORK

SIGNED

DRAWN: A.L. Pronqui

REVIEWED

SKILLING, HELLE, CHRISTIANSEN, ROBERTSON — Structural & Civil Engineers

PROJECT: THE WORLD TRADE CENTER | TITLE: GIRDER ELEVATIONS | DATE: 11-3-72

REVISIONS

Released for construction 11-20-72

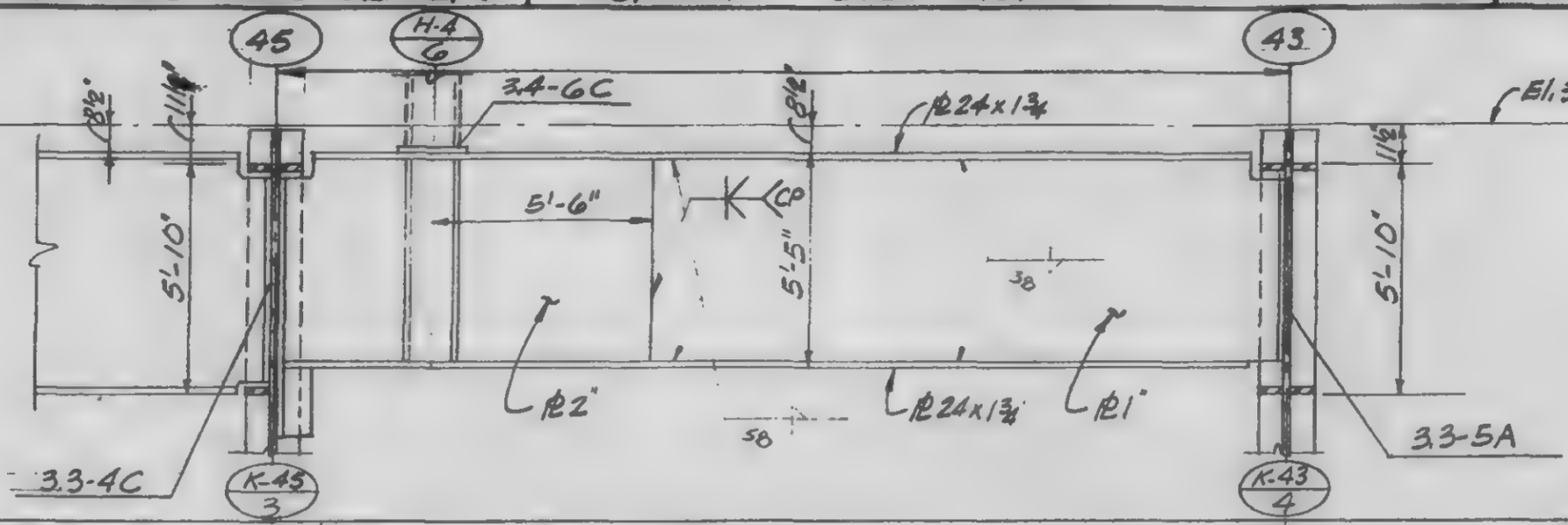

A

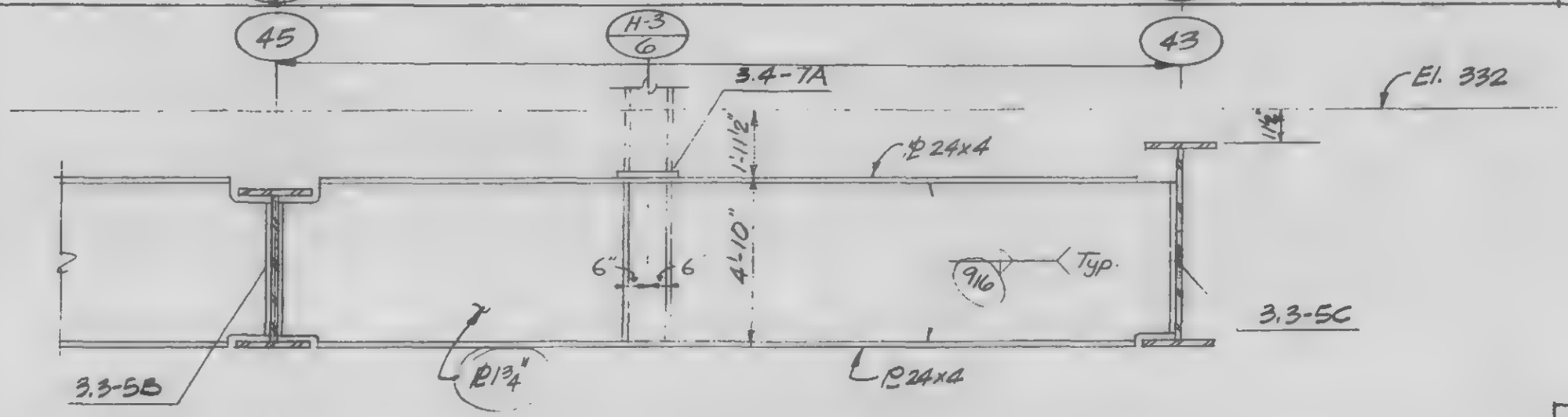

B

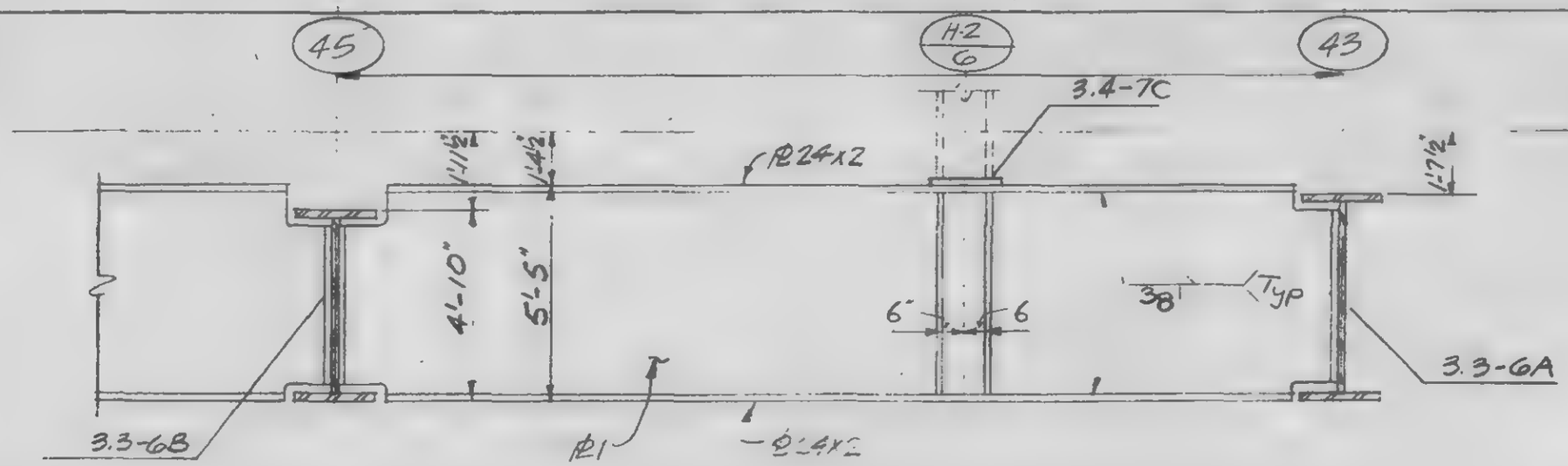

C

LICENSED PROFESSIONAL ENGINEER
LESLIE E. ROBERTSON
No. 34360
UNIVERSITY OF THE STATE OF NEW YORK

DESIGNED

A.L. Fronqui

REVIEWED

13-K3.1-4

SKILLING, HELLE, CHRISTIANSEN, ROBERTSON — Structural & Civil Engineers

PROJECT: THE WORLD TRADE CENTER | TITLE: GIRDER ELEVATIONS | DATE: 11-3-72

REVISIONS

Released for construction 11-20-72

12-11-72

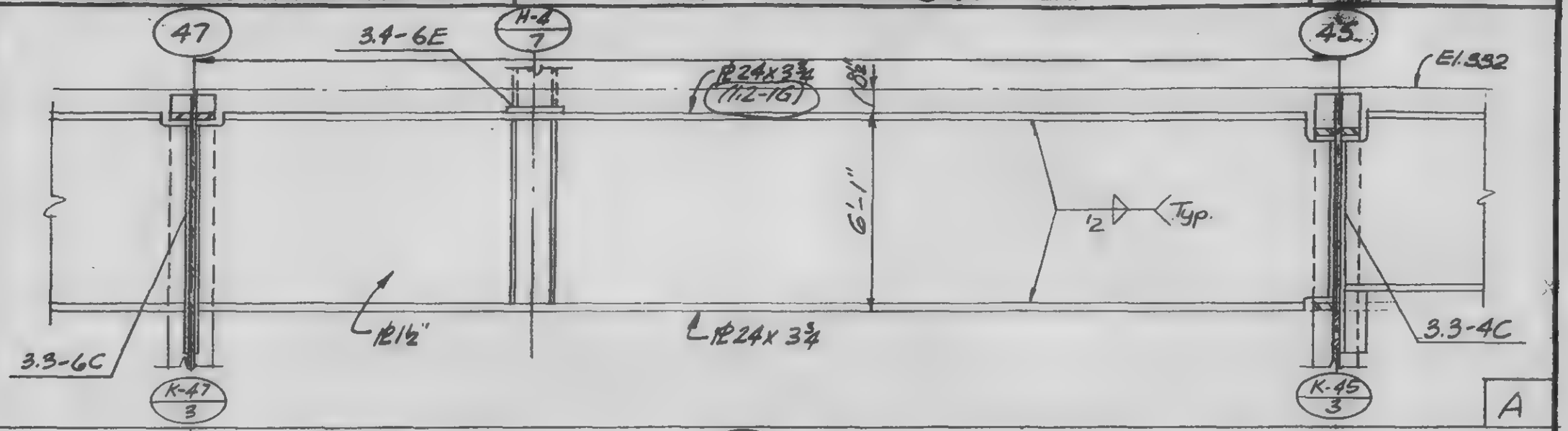

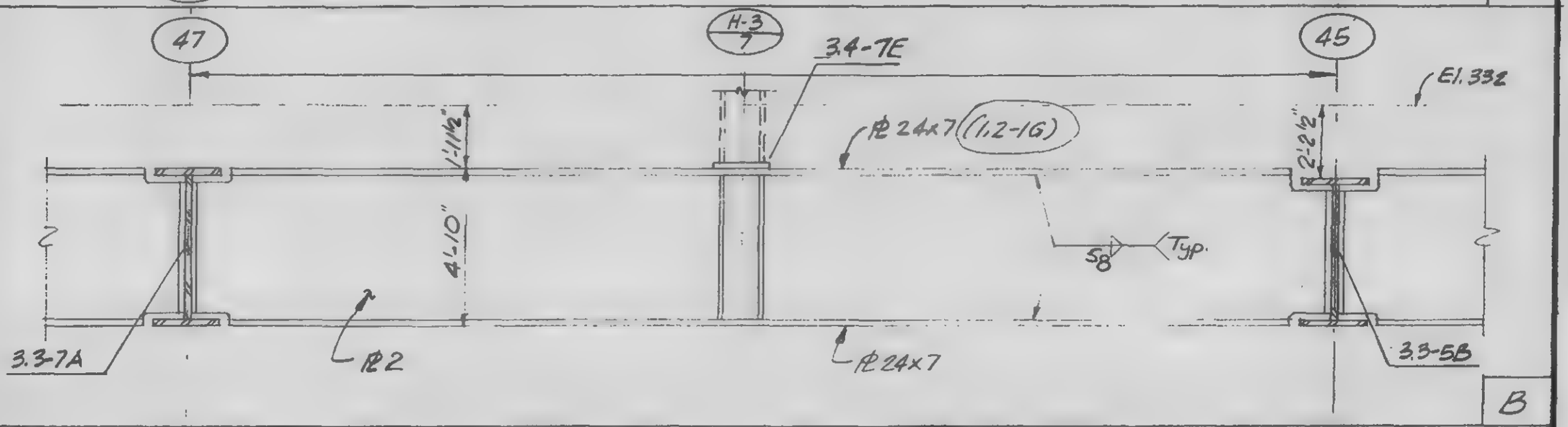

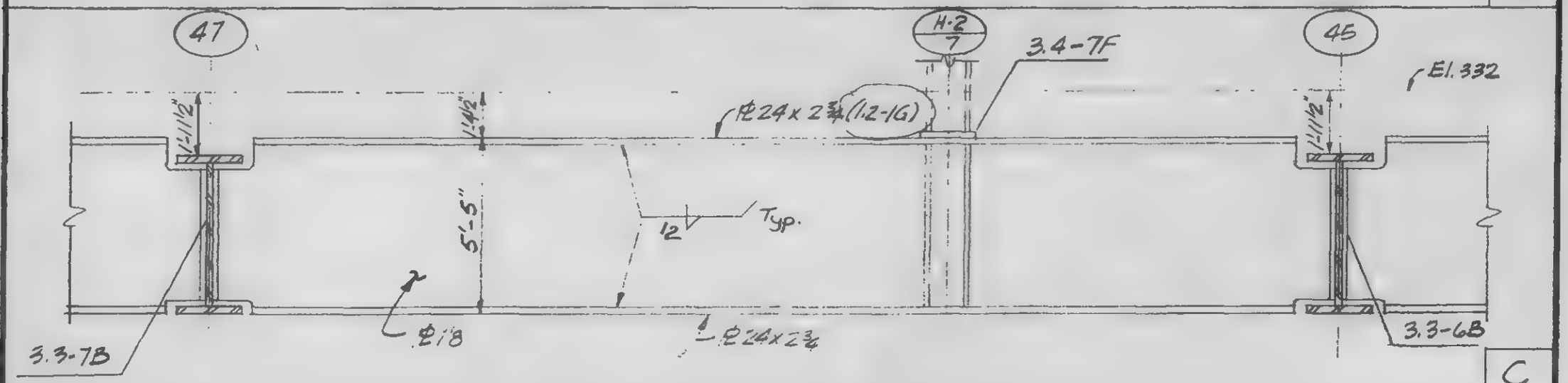

LICENSED PROFESSIONAL ENGINEER — LESLIE E. ROBERTSON — No. 34360 — UNIVERSITY OF THE STATE OF NEW YORK

DESIGNED

DRAWN A.L. Franqui

13-K3.1-5

SKILLING, HELLE, CHRISTIANSEN, ROBERTSON — Structural & Civil Engineers

PROJECT: THE WORLD TRADE CENTER | TITLE: GIRDER ELEVATIONS | DATE: 11-5-72

REVISIONS

Released for construction 11-20-72

6-4-73

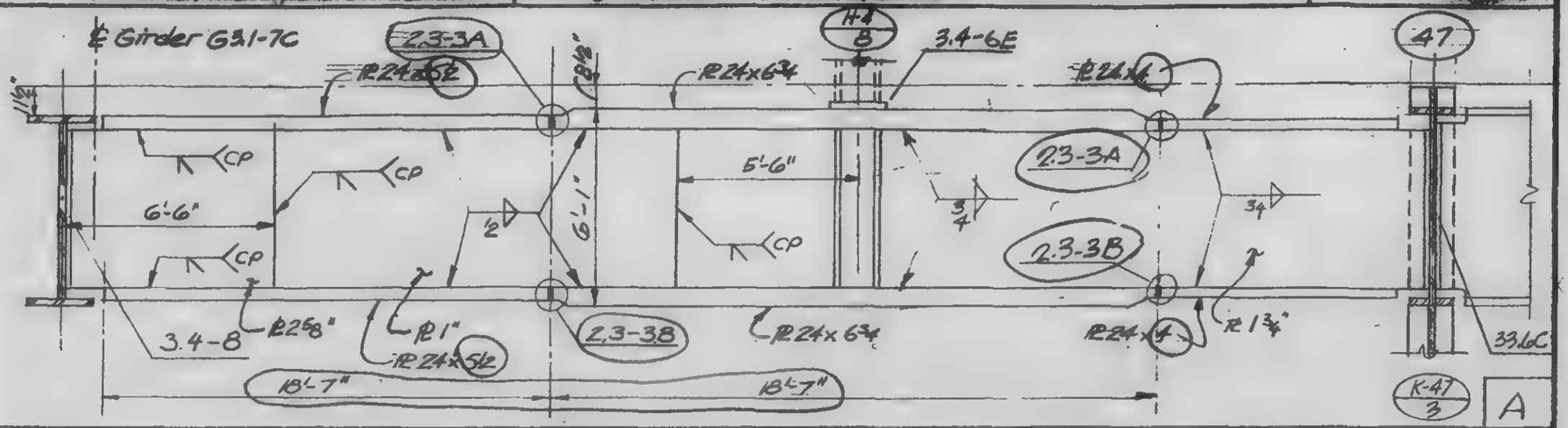

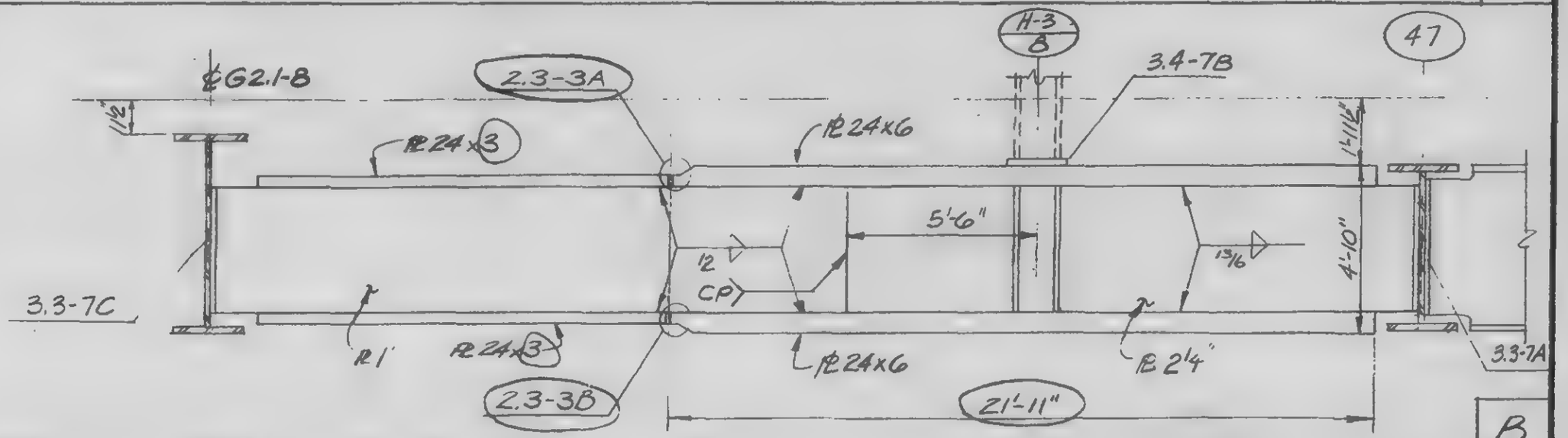

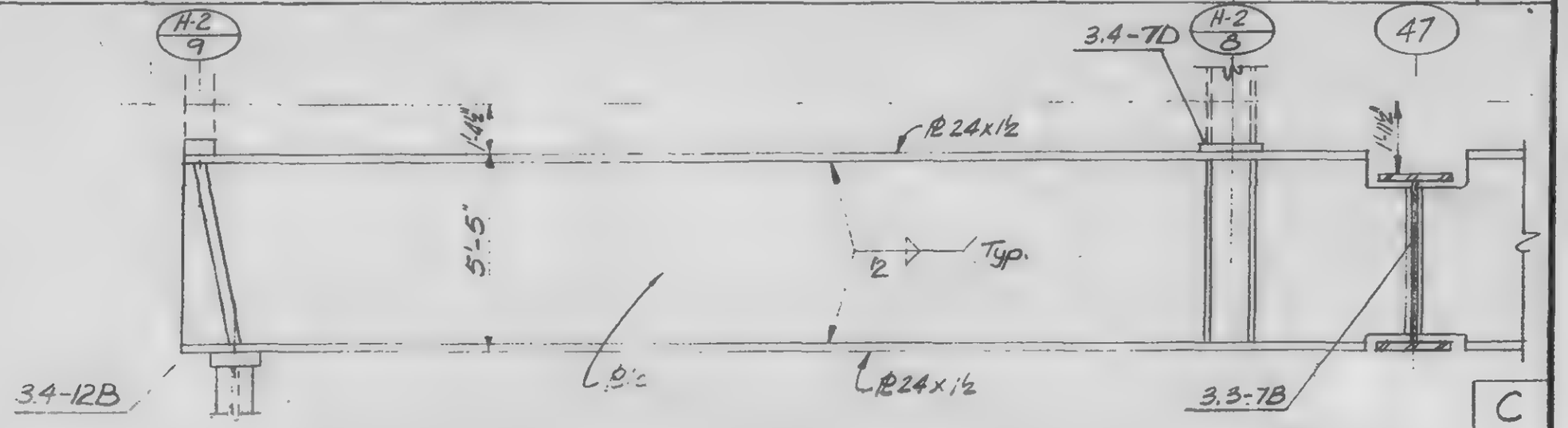

13-K3.1-6

LICENSED PROFESSIONAL ENGINEER — LESLIE E. ROBERTSON — No 34360 — UNIVERSITY OF THE STATE OF NEW YORK

DESIGNED

DRAWN A.L. Frangui

REVIEWED

SKILLING, HELLE, CHRISTIANSEN, ROBERTSON — Structural & Civil Engineers

PROJECT: THE WORLD TRADE CENTER | TITLE: GIRDER ELEVATIONS | DATE: 11-3-72

REVISIONS

Released for construction 11-20-72

6-4-73

6-20-73

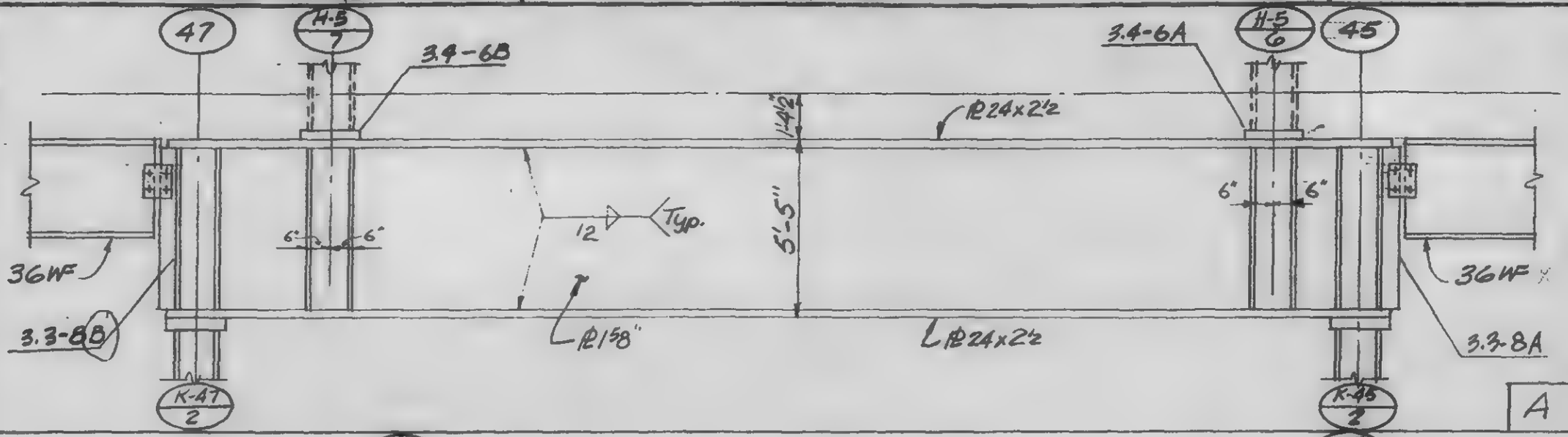

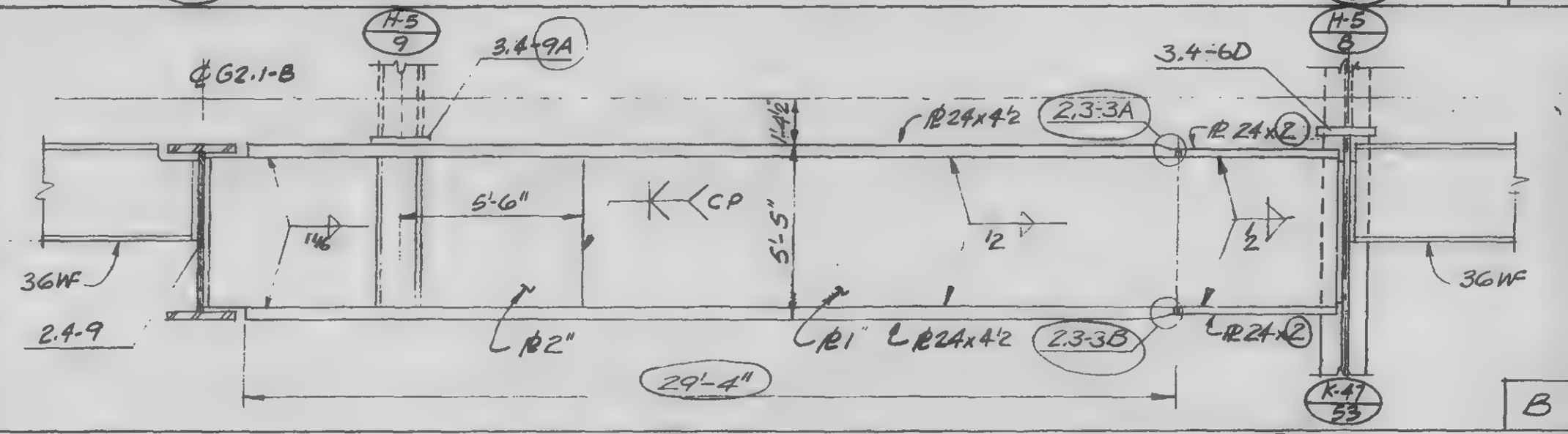

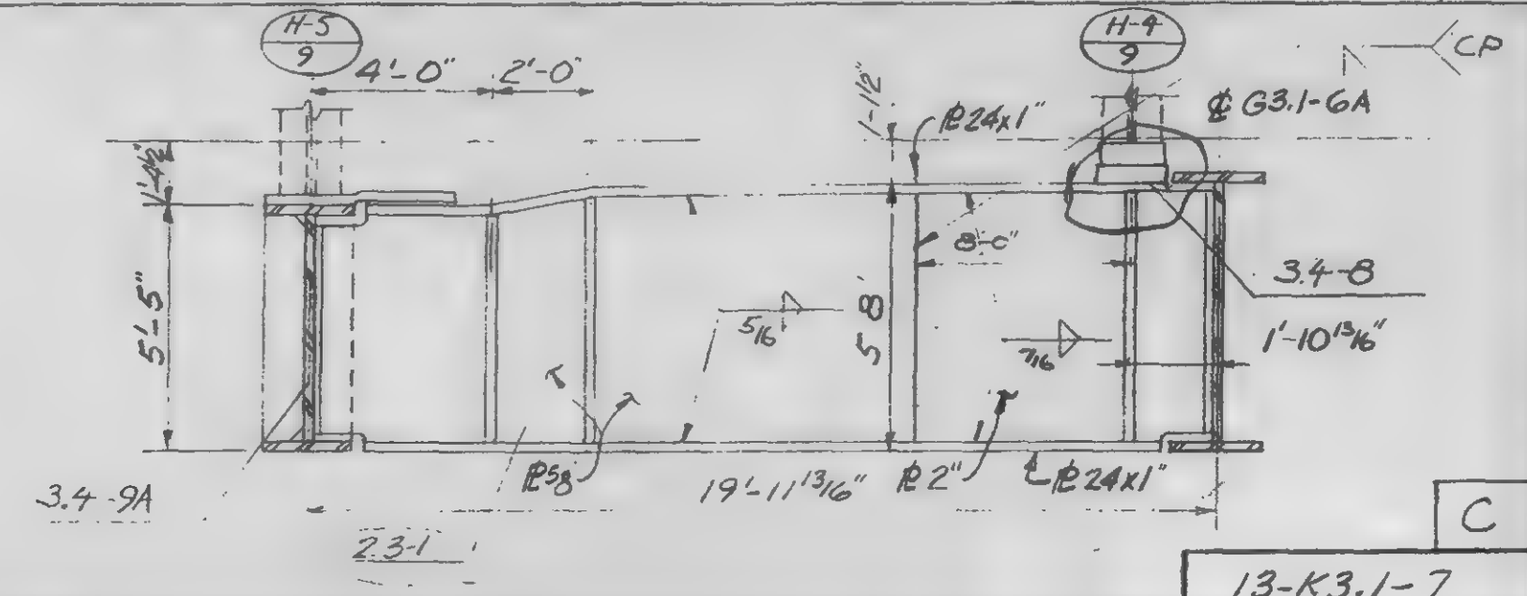

13-K3.1-7

LICENSED PROFESSIONAL ENGINEER — LESLIE E. ROBERTSON — No. 34360 — UNIVERSITY OF THE STATE OF NEW YORK

DESIGNED

DRAWN: A.L. Franqui

REVIEWED

SKILLING, HELLE, CHRISTIANSEN, ROBERTSON — Structural & Civil Engineers

PROJECT: THE WORLD TRADE CENTER | TITLE: GIRDER ELEVATIONS | DATE: 11-3-72

REVISIONS

Released for construction 11-20-72

12-11-72

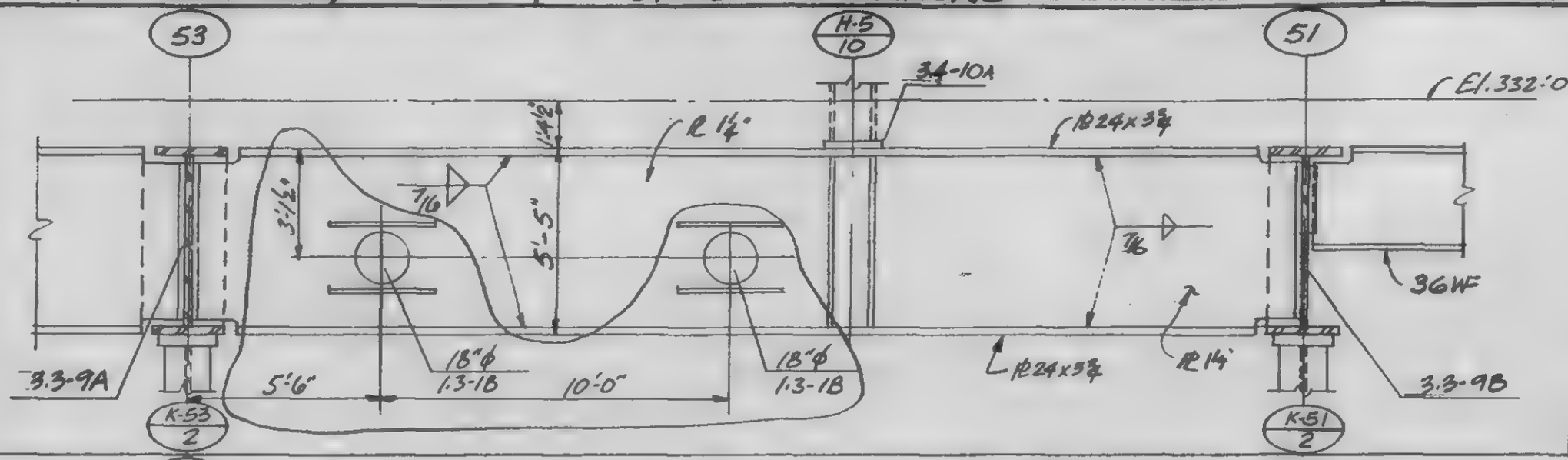

A

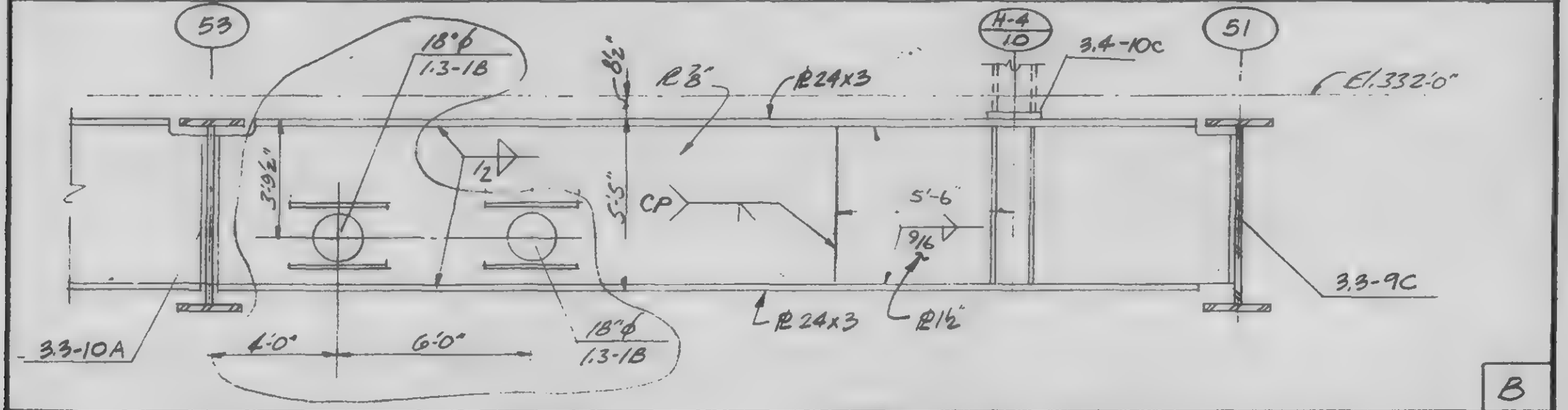

B

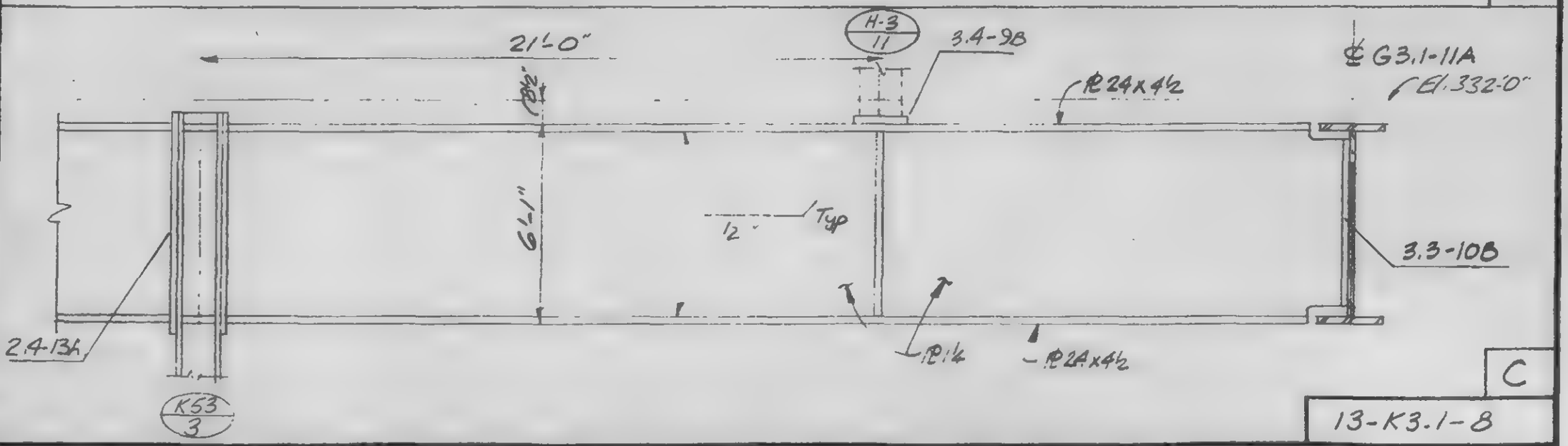

C

13-K3.1-8

LICENSED PROFESSIONAL ENGINEER
LESLIE E. ROBERTSON
No 34360
UNIVERSITY OF THE STATE OF NEW YORK

DESIGNED

DRAWN
A.L. Franqui

REVIEWED

SKILLING, HELLE, CHRISTIANSEN, ROBERTSON — Structural & Civil Engineers

PROJECT: THE WORLD TRADE CENTER | TITLE: GIRDER ELEVATIONS | DATE: 11-3-72

REVISIONS

Released for construction 11-20-72

12-11-72

6-4-73

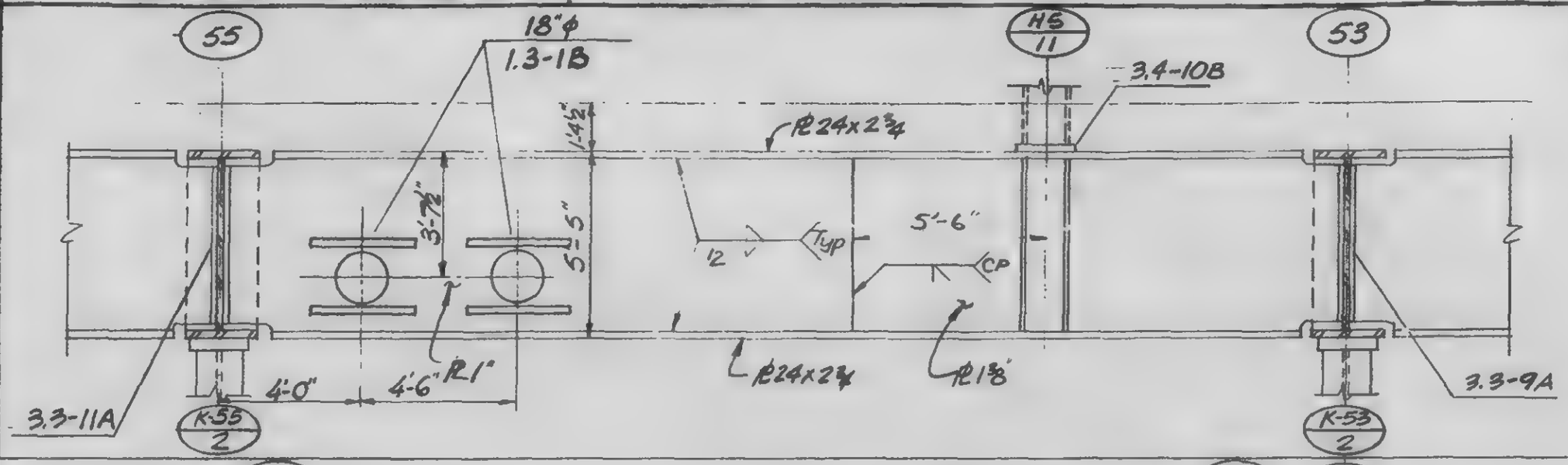

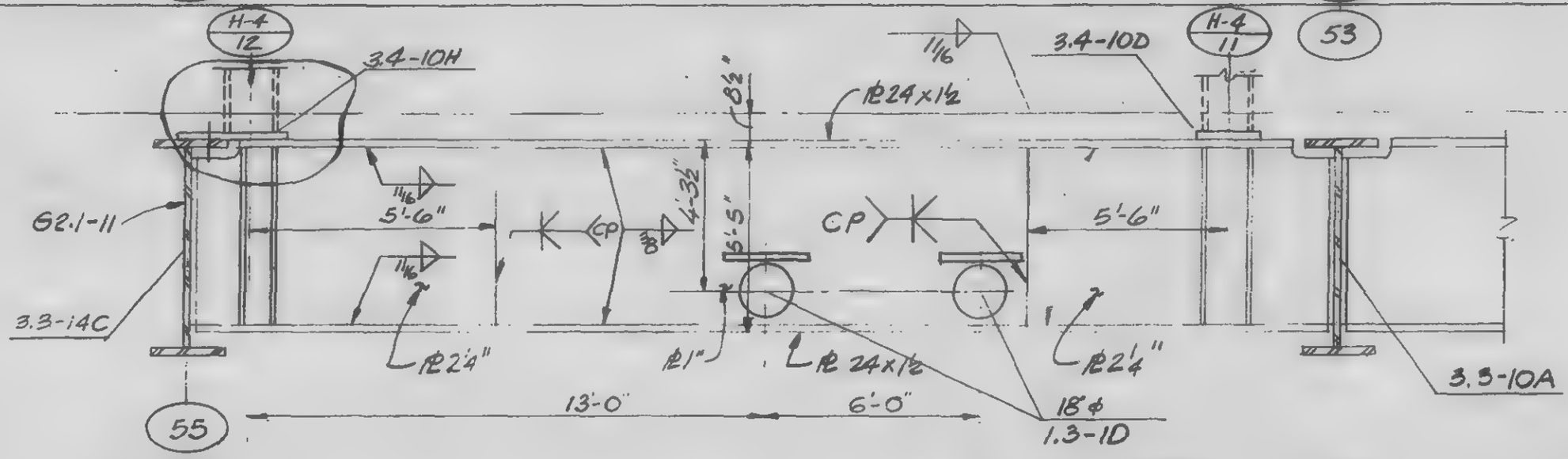

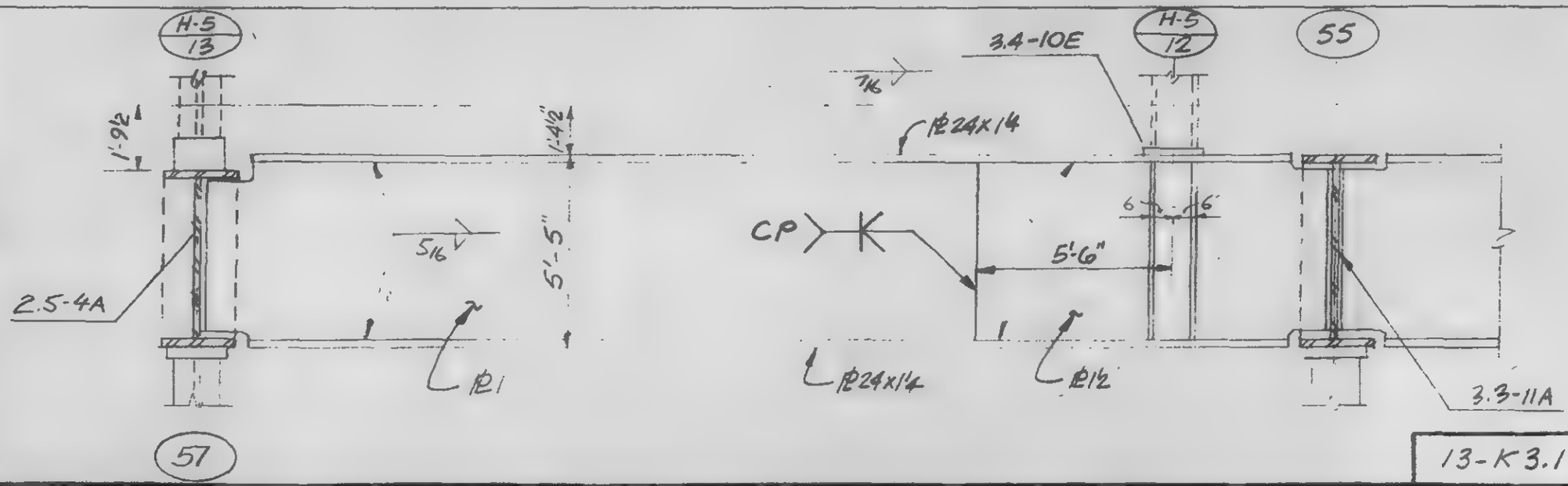

LICENSED PROFESSIONAL ENGINEER — LESLIE E. ROBERTSON — No 34360 — UNIVERSITY OF THE STATE OF NEW YORK

DESIGNED

DRAWN A.L. Franqui

REVIEWED

13-K 3.1-9

SKILLING, HELLE, CHRISTIANSEN, ROBERTSON — Structural & Civil Engineers

PROJECT: THE WORLD TRADE CENTER | TITLE: GIRDER ELEVATIONS | DATE: 11-3-72

REVISIONS

Released for construction 11-20-72

4-20-73

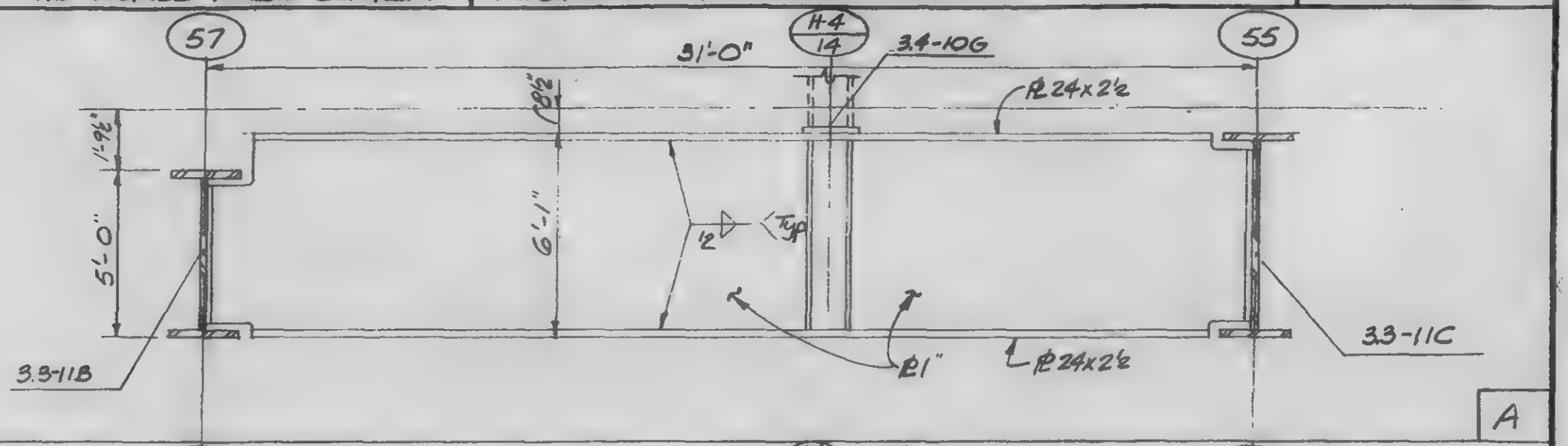

A

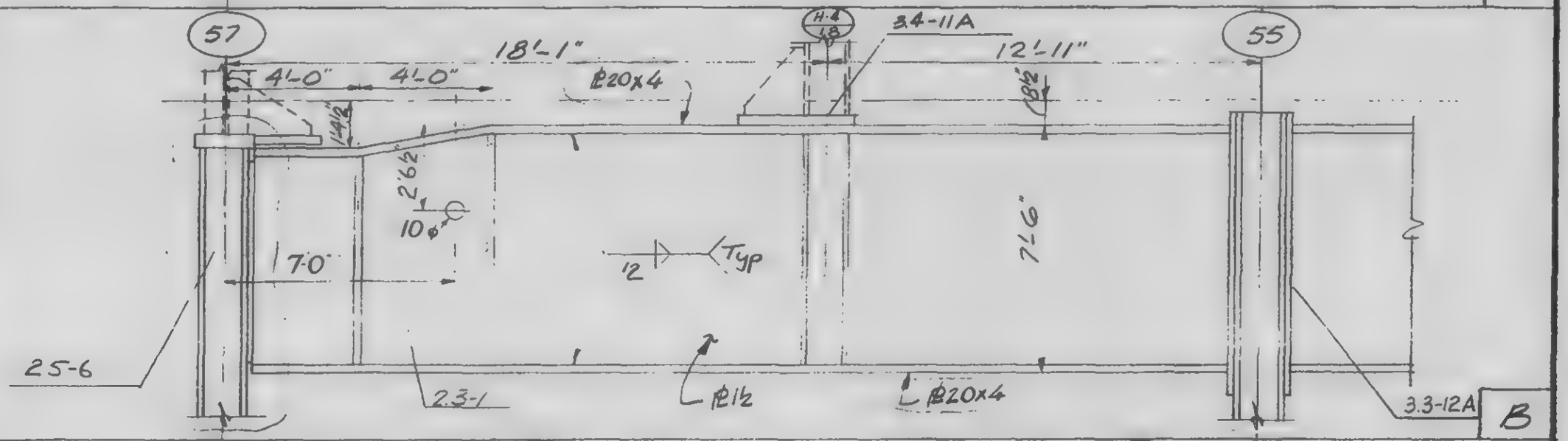

B

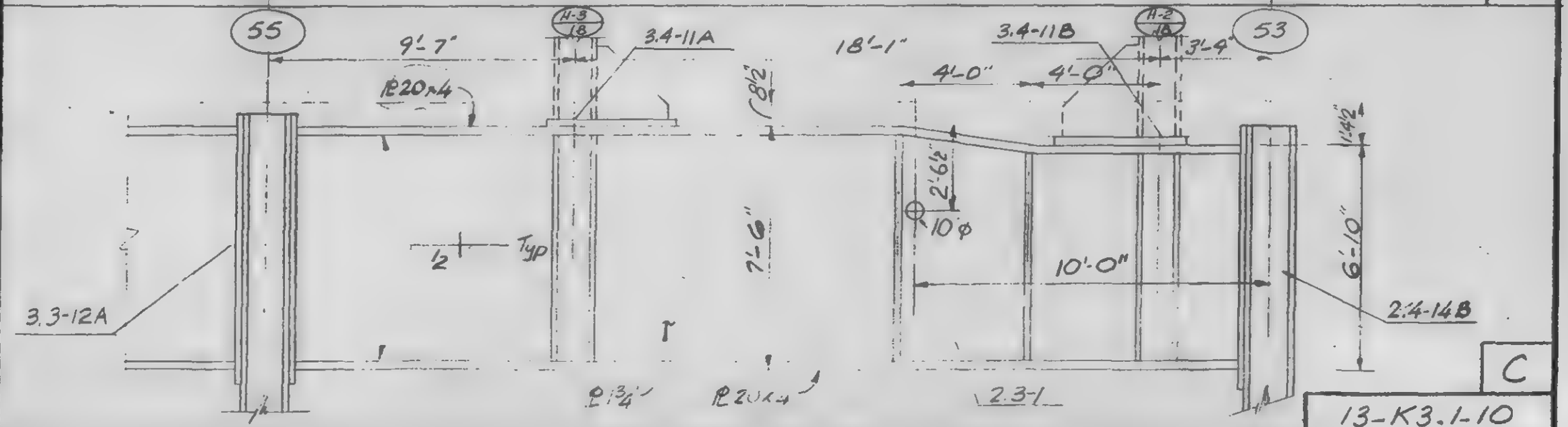

C

13-K3.1-10

LICENSED PROFESSIONAL ENGINEER — LESLIE E. ROBERTSON — No. 34360 — UNIVERSITY OF THE STATE OF NEW YORK

DESIGNED K. Chiang

DRAWN A.L. Franqui

REVIEWED

SKILLING, HELLE, CHRISTIANSEN, ROBERTSON . Structural & Civil Engineers

PROJECT THE WORLD TRADE CENTER | TITLE GIRDER ELEVATIONS | DATE 11-3-72

REVISIONS

Released for construction 11-20-72

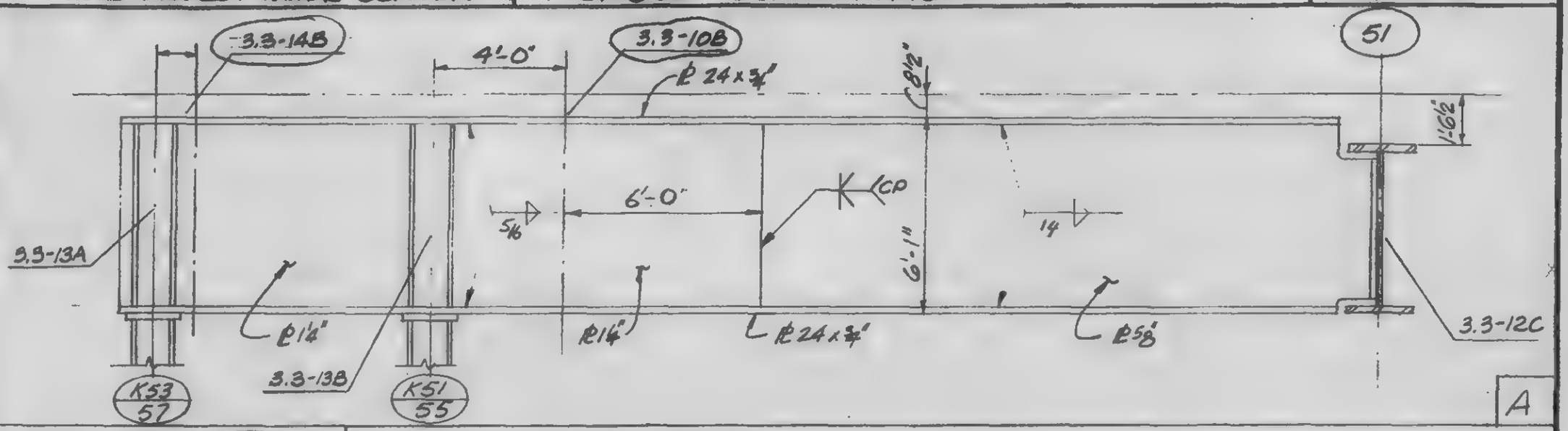

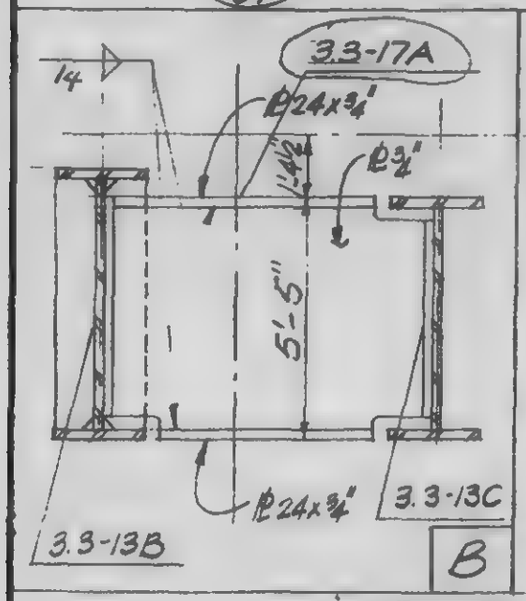

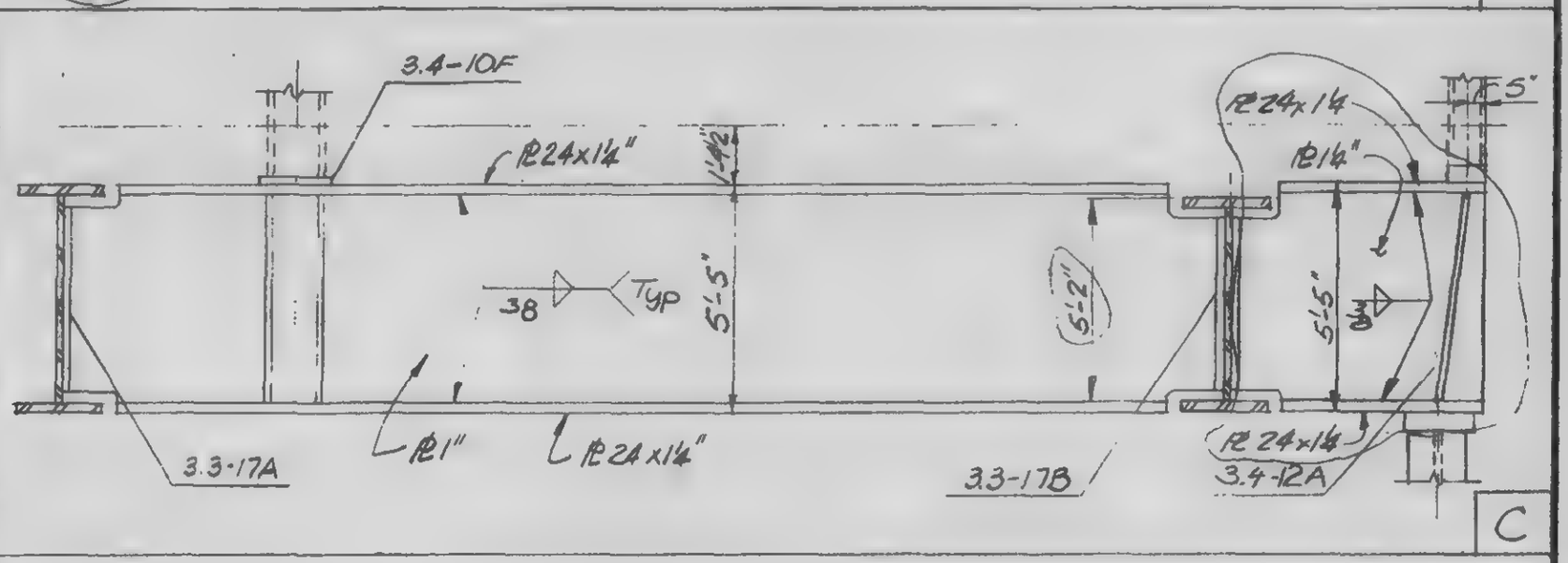

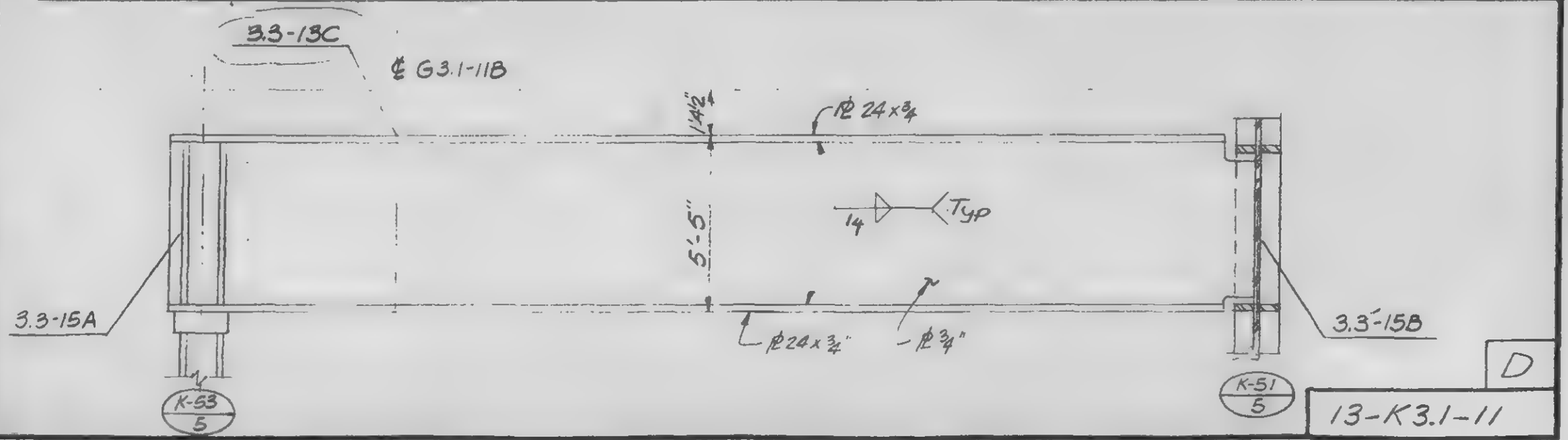

13-K3.1-11

LICENSED PROFESSIONAL ENGINEER
LESLIE E ROBERTSON
No. 34360
UNIVERSITY OF THE STATE OF NEW YORK

DESIGNED

A.L. Frongui

REVIEWED

SKILLING, HELLE, CHRISTIANSEN, ROBERTSON — Structural & Civil Engineers

PROJECT: THE WORLD TRADE CENTER | TITLE: GIRDER ELEVATIONS | DATE: 11-3-72

REVISIONS

- Released for construction 11-20-72
- 12-11-72
- 2-5-73
- 4-20-73

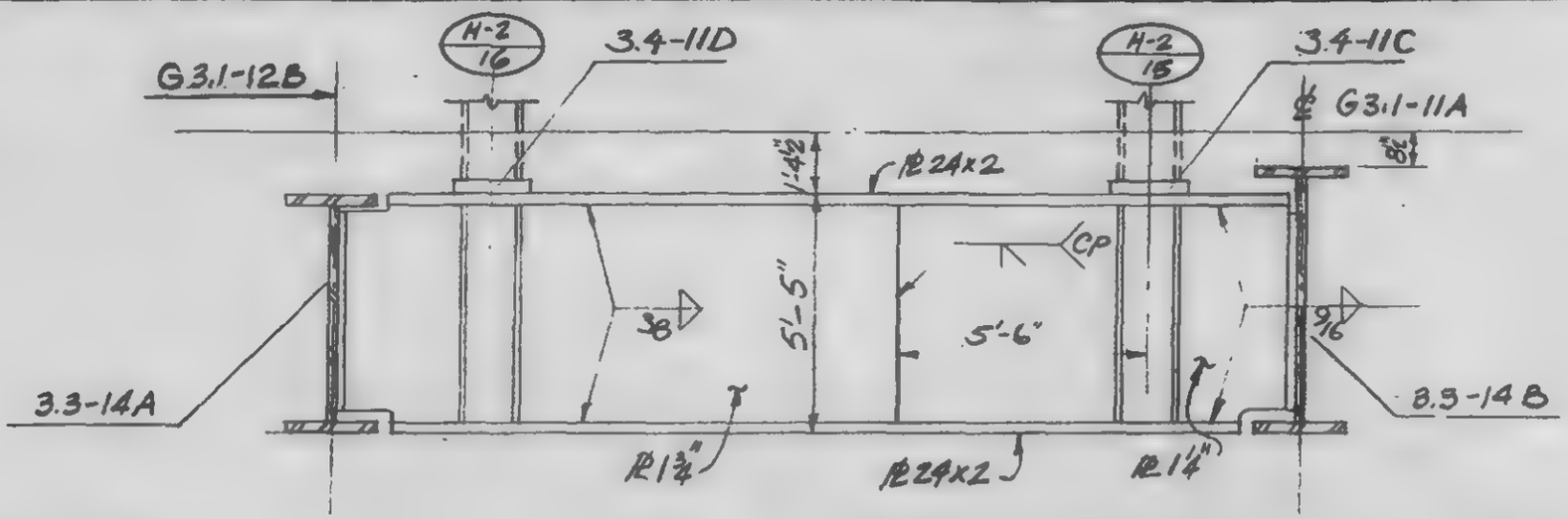

A

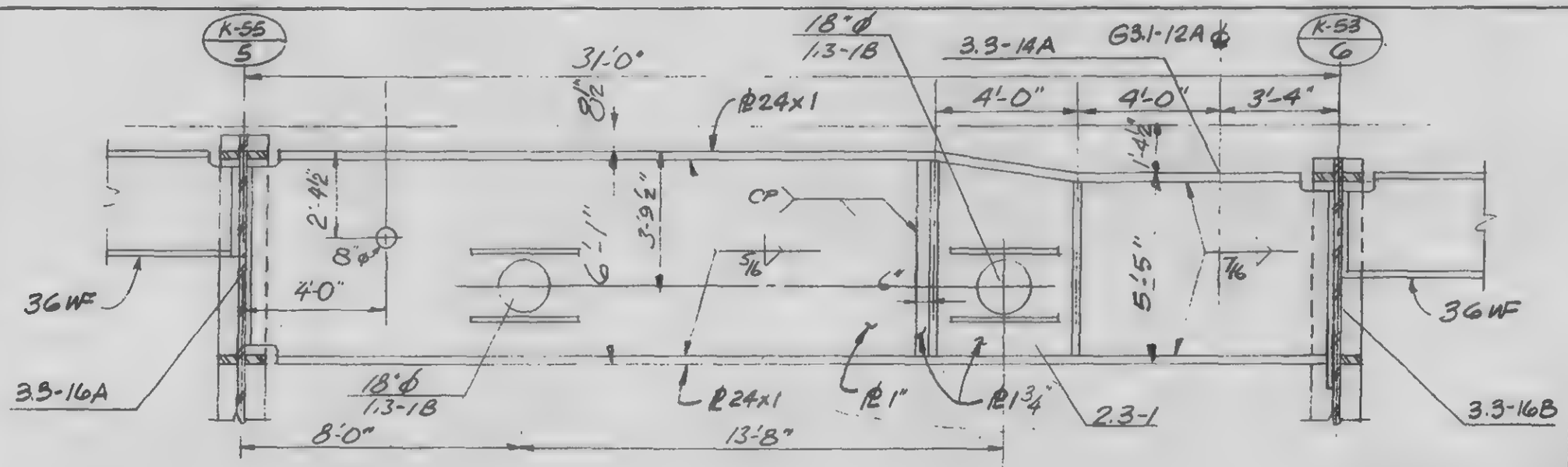

B

LICENSED PROFESSIONAL ENGINEER — LESLIE E. ROBERTSON — No 34360 — UNIVERSITY OF THE STATE OF NEW YORK

DESIGNED: K. Chiang
DRAWN: A.L. Franqui
REVIEWED:

13-K3.1-12

SKILLING, HELLE, CHRISTIANSEN, ROBERTSON — Structural & Civil Engineers

PROJECT: THE WORLD TRADE CENTER | TITLE: TYPICAL GIRDER DETAILS | DATE: 11-3-72

REVISIONS

Released for construction 11-20-72

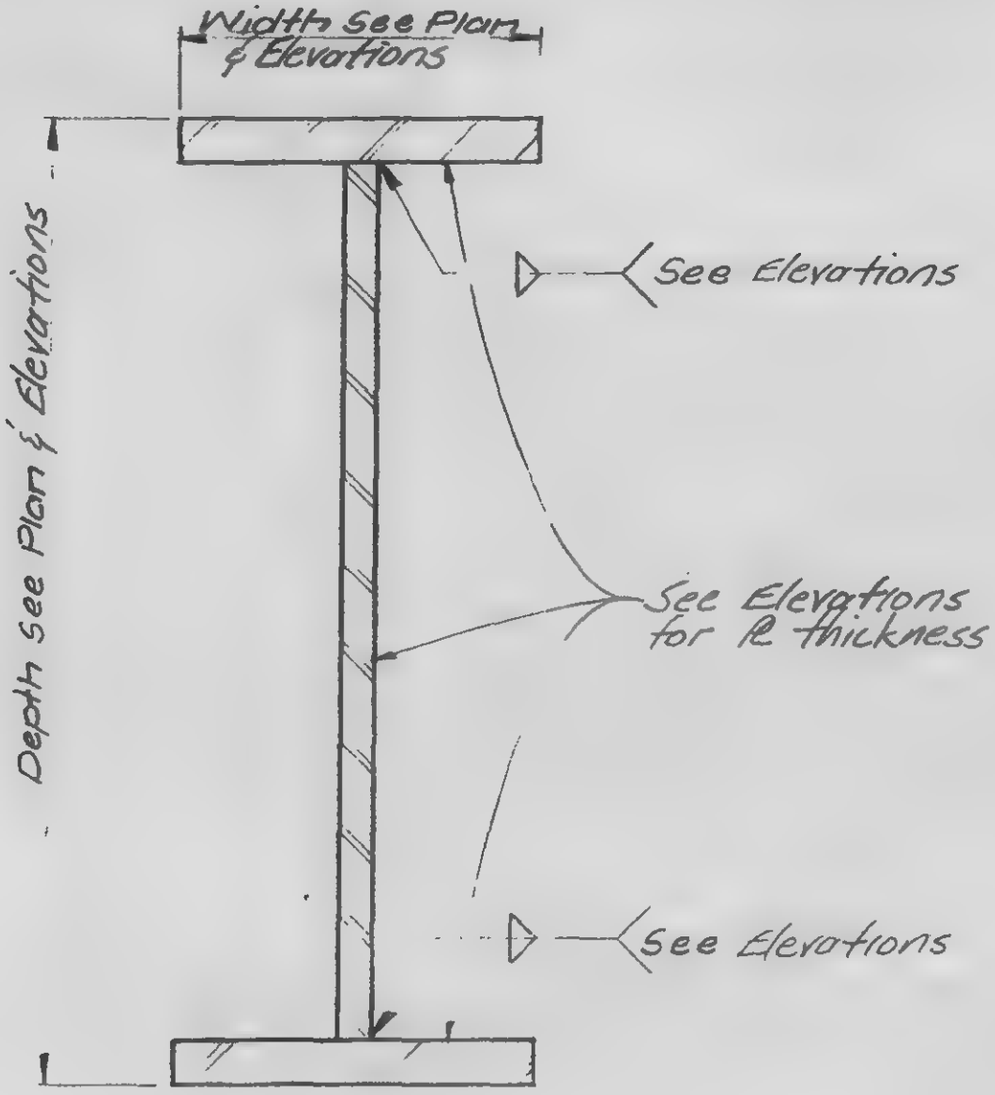

LICENSED PROFESSIONAL ENGINEER — LESLIE E. ROBERTSON — No 34360 — UNIVERSITY OF THE STATE OF NEW YORK

DESIGNED

DRAWN TR

REVIEWED

13-K3.2-1

SKILLING, HELLE, CHRISTIANSEN, ROBERTSON — Structural & Civil Engineers

PROJECT: THE WORLD TRADE CENTER | TITLE: GIRDER CONNECTION TYPICAL END PLATE | DATE: 11-3-72

REVISIONS

Released for construction 11-20-72

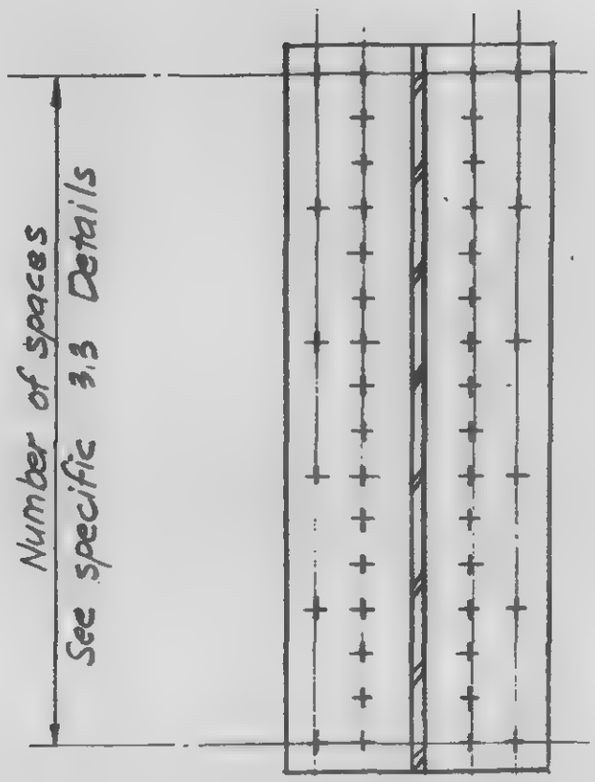

Place bolt each space these two rows.

Place remaining bolts approx. evenly spaced in these two rows.

See specific 3.3 Details for total number of bolts

4 ROWS

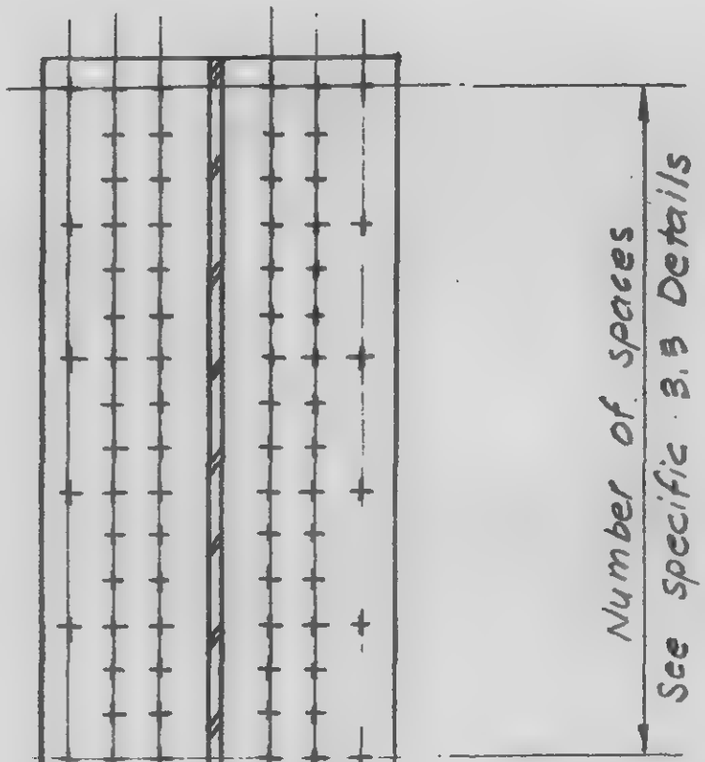

Place bolt each space these four rows

Place remaining bolts approx. evenly spaced in these two rows.

6 ROWS

See specific 3.3 Details for total number of bolts.

13-K3.3-1

LICENSED PROFESSIONAL ENGINEER — LESLIE E. ROBERTSON — No. 34360 — UNIVERSITY OF THE STATE OF NEW YORK

DESIGNED

DRAWN

REVIEWED

SKILLING, HELLE, CHRISTIANSEN, ROBERTSON — Structural Engineers

PROJECT THE WORLD TRADE CENTER | TITLE GIRDER CONNECTION DETAILS | DATE 11/3/72

REVISIONS

Released for construction 11-20-72

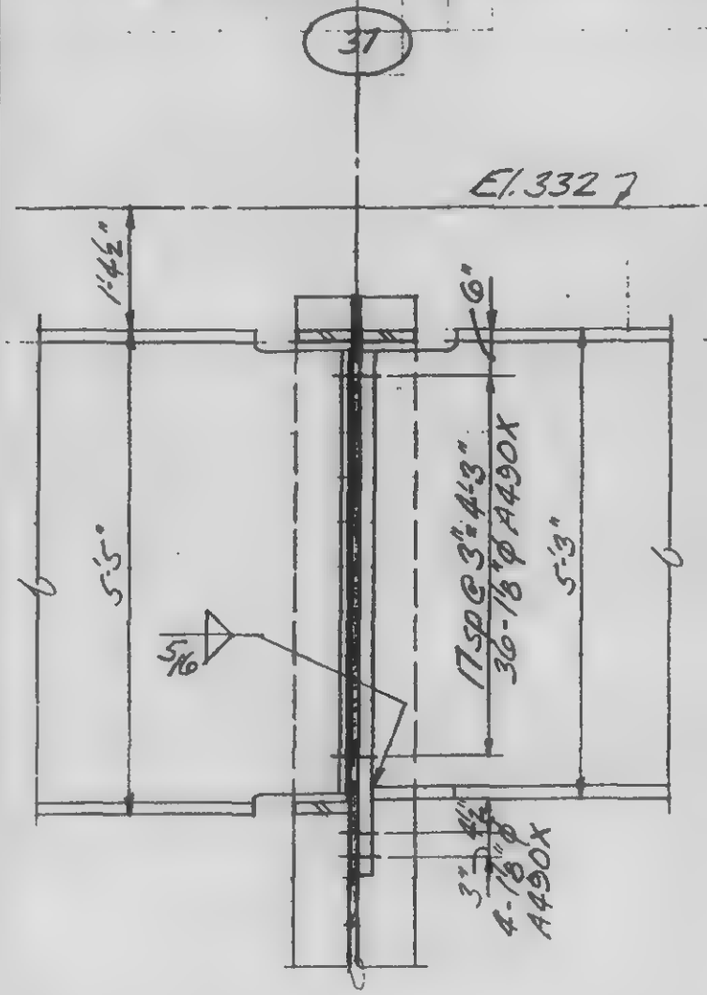

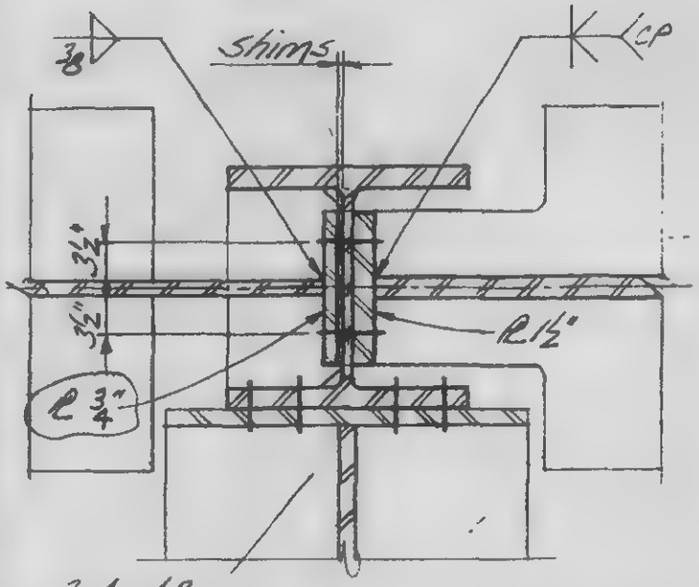

A

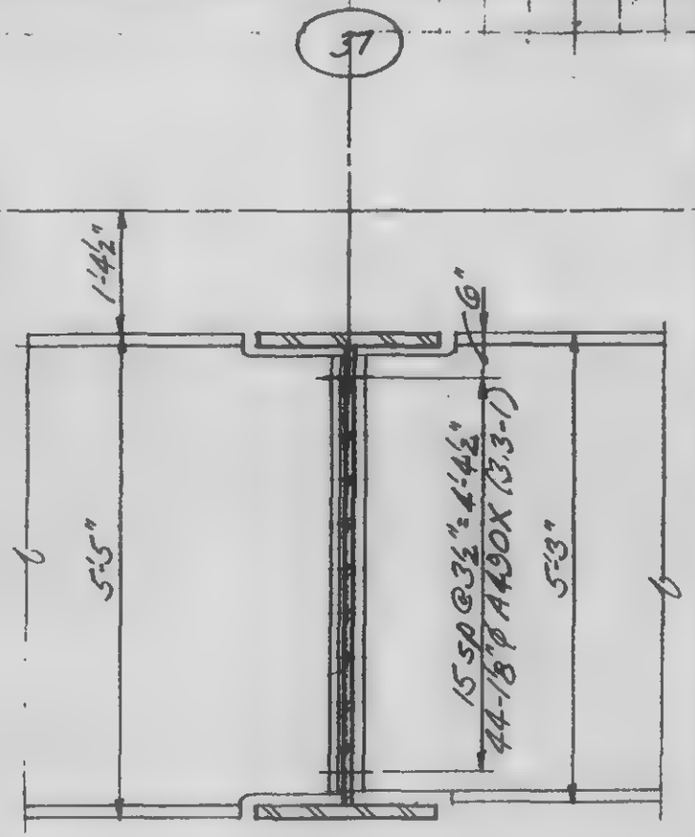

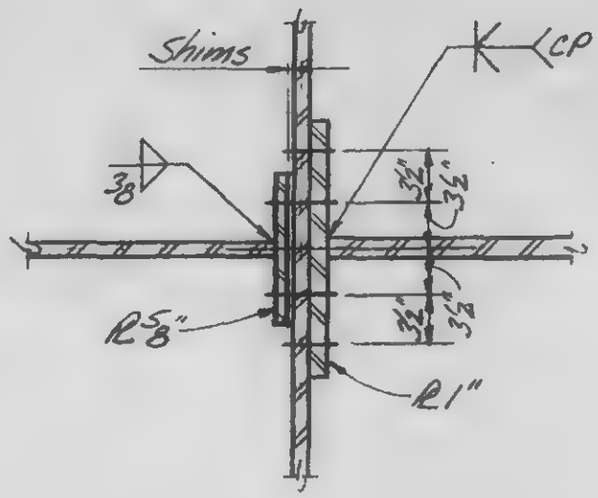

B

C

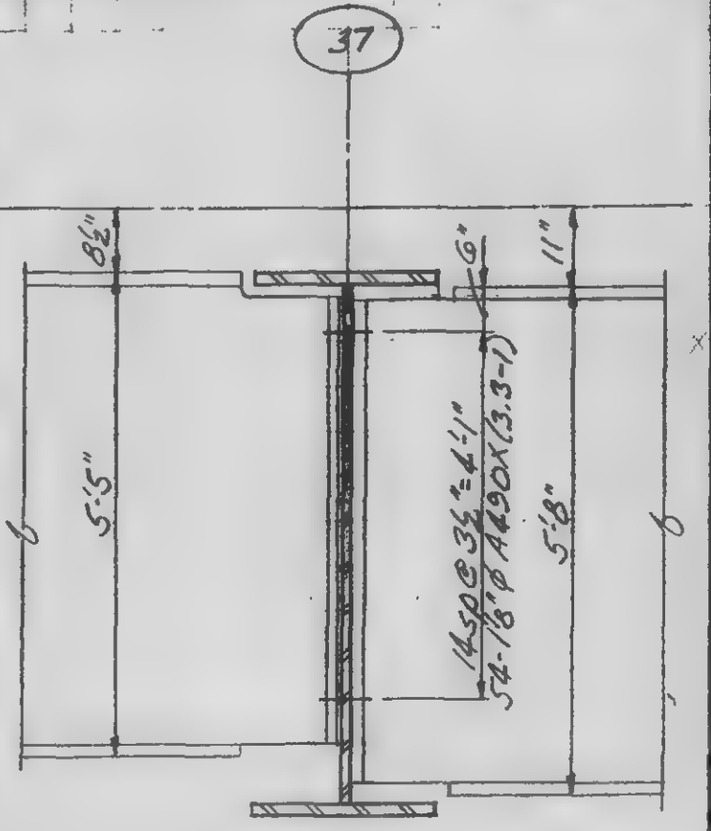

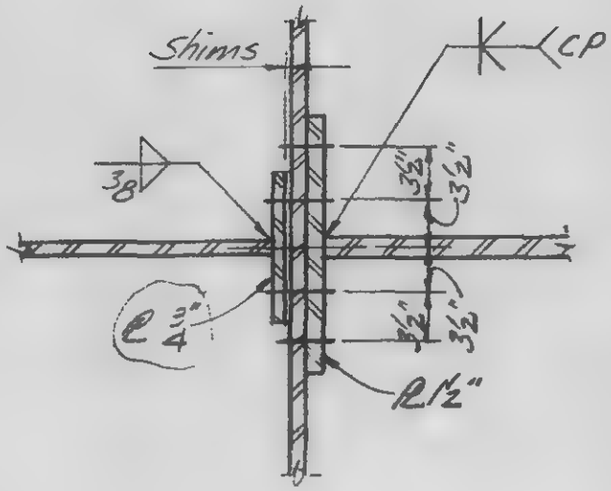

13-K3.3-2

LICENSED PROFESSIONAL ENGINEER — LESLIE E. ROBERTSON — No. 34960 — UNIVERSITY OF THE STATE OF NEW YORK

DESIGNED

DRAWN

REVIEWED

SKILLING, HELLE, CHRISTIANSEN, ROBERTSON — Structural & Civil Engineers

PROJECT: THE WORLD TRADE CENTER

TITLE: GIRDER CONNECTION DETAILS

DATE: 11-3-72

REVISIONS

Released for construction 11-20-72

12-11-72

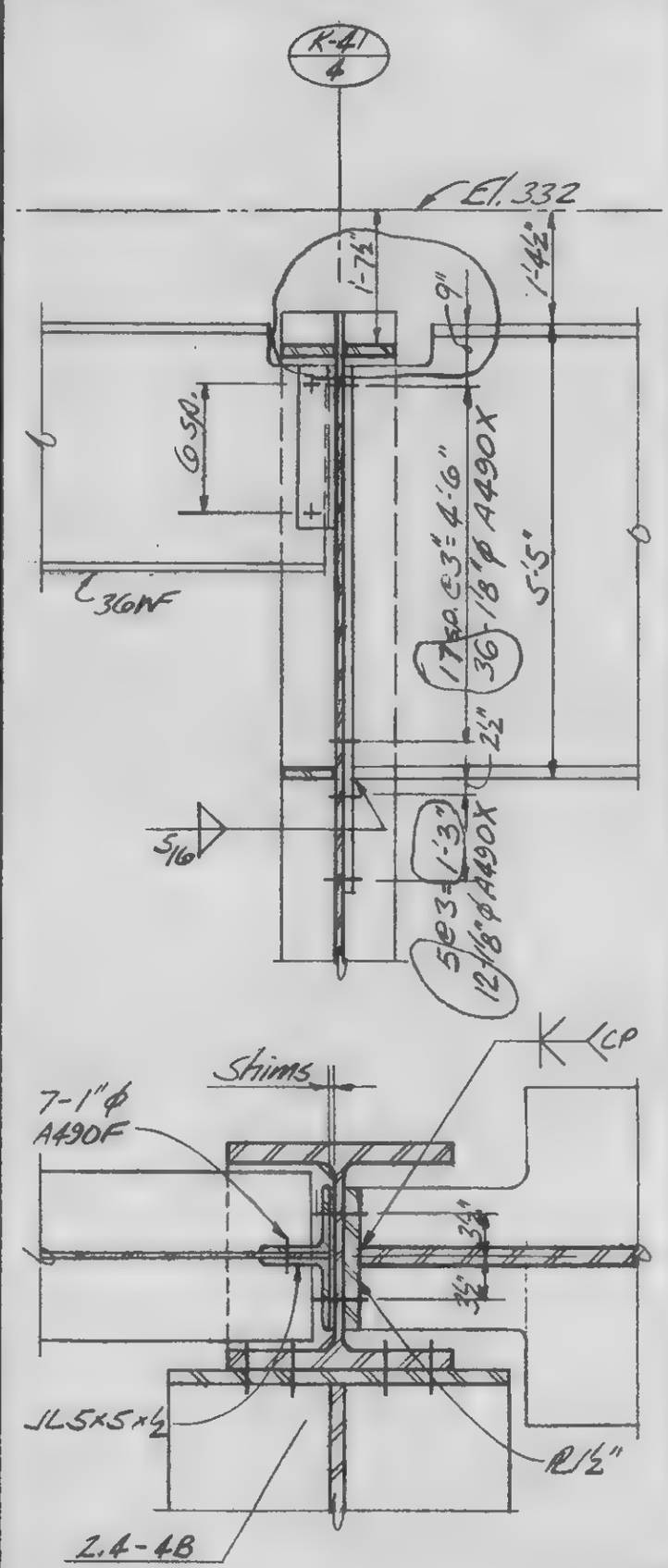

A

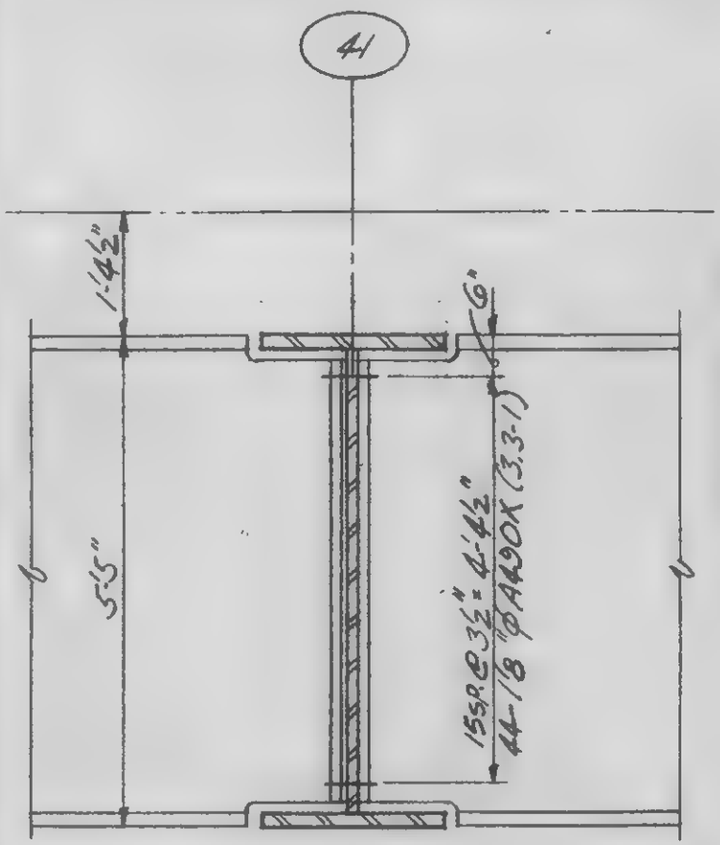

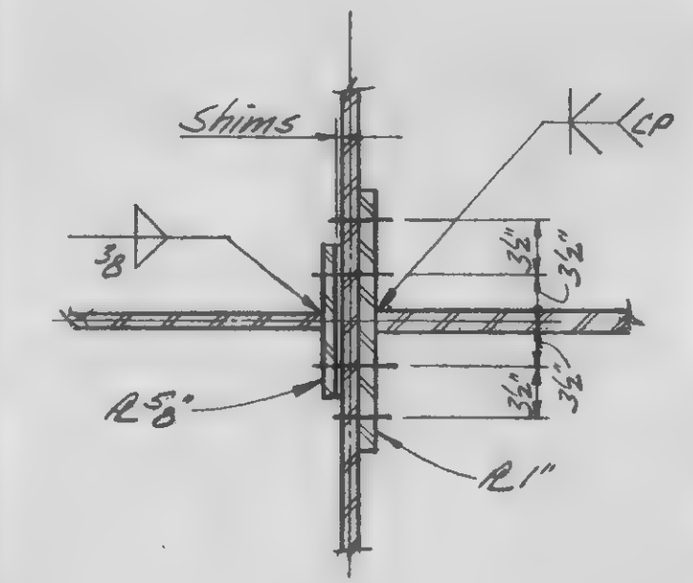

B

C

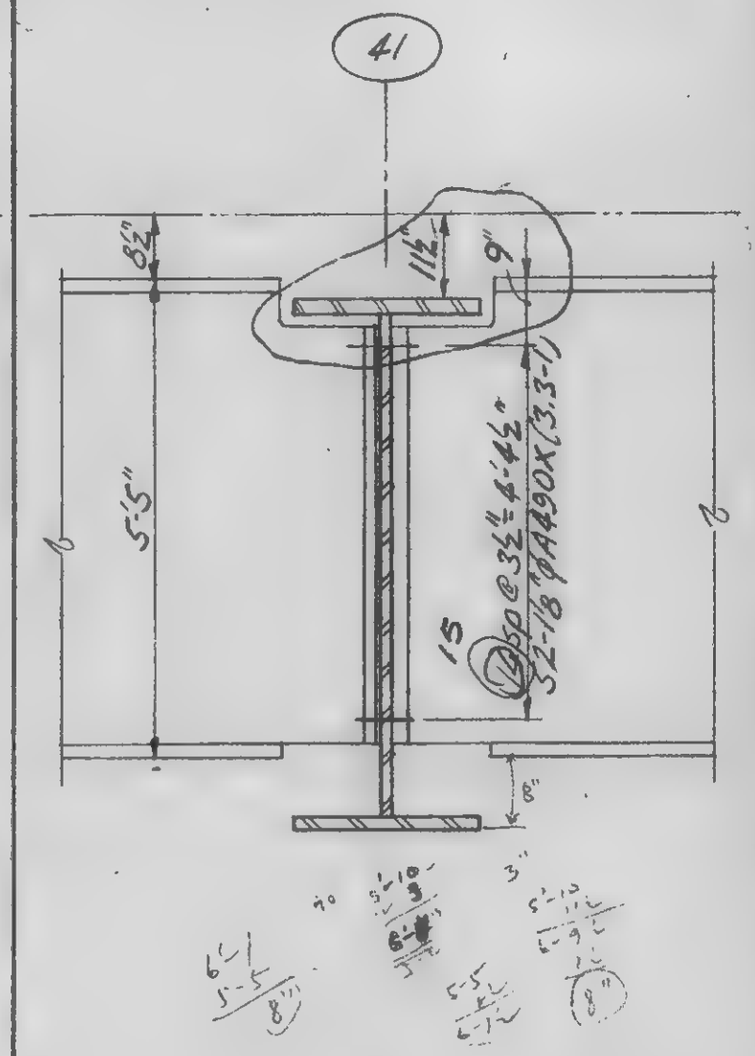

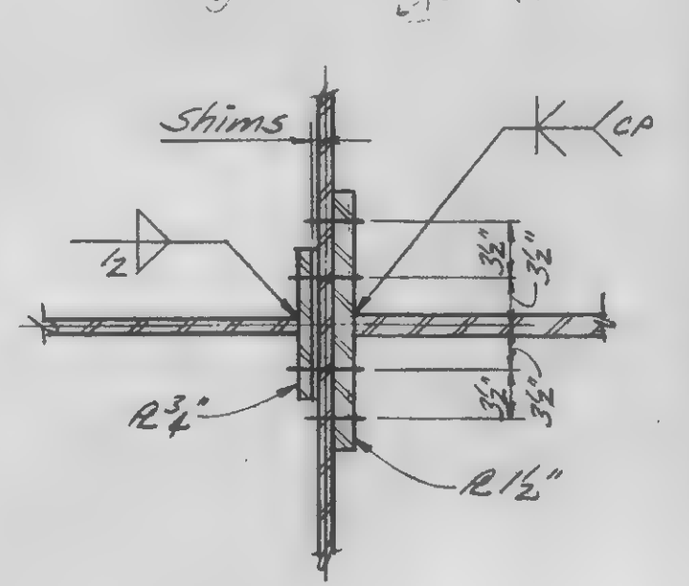

13-K3.3-3

LICENSED PROFESSIONAL ENGINEER
LESLIE E. ROBERTSON
No 34360
UNIVERSITY OF THE STATE OF NEW YORK

DESIGNED

DRAWN

CHECKED

SKILLING, HELLE, CHRISTIANSEN ROBERTSON — Structural & Civil Engineers

PROJECT THE WORLD TRADE CENTER | TITLE GIRDER CONNECTION DETAILS | DATE 11-3-72

REVISIONS

Released for construction 11-20-72

12-11-72

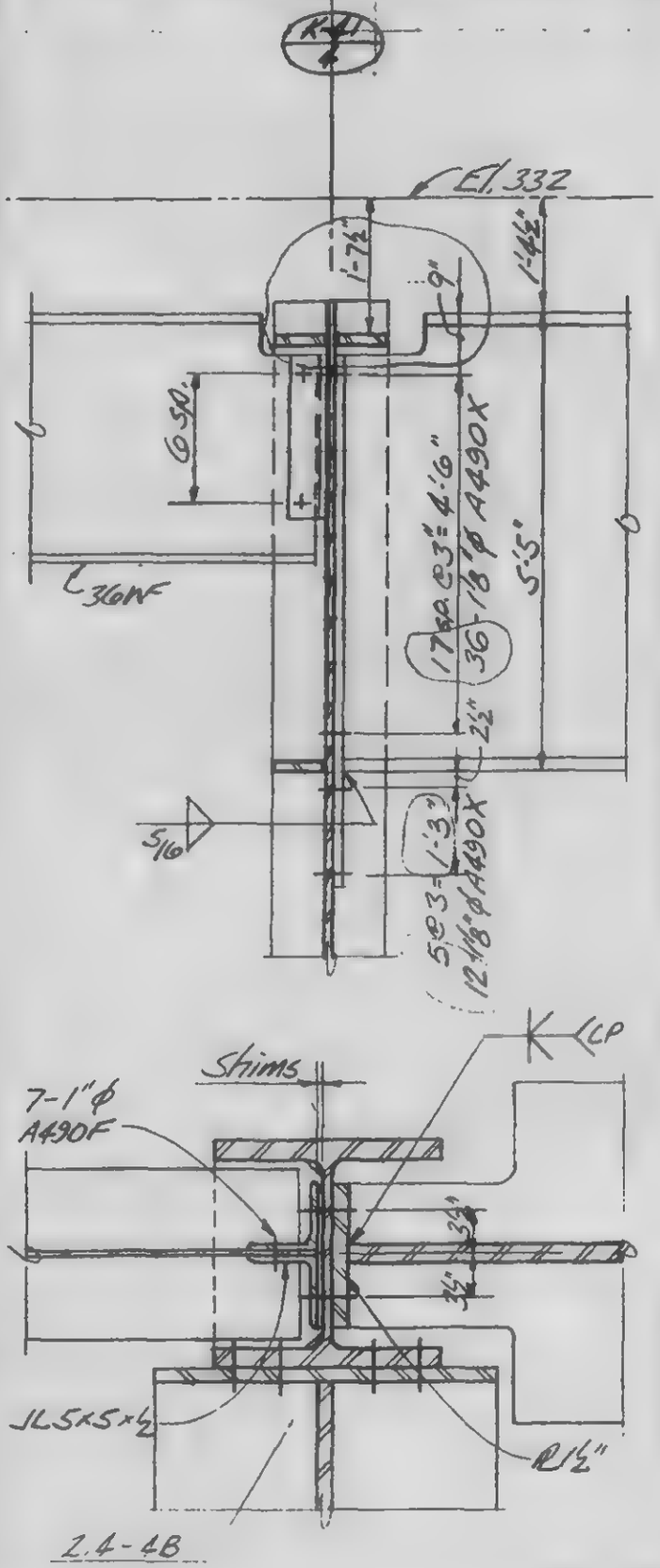

A

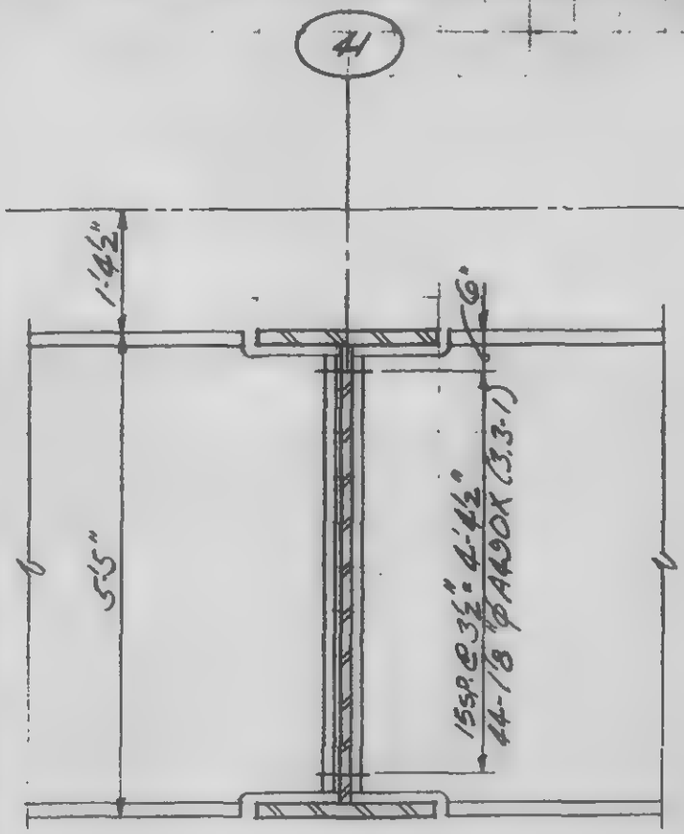

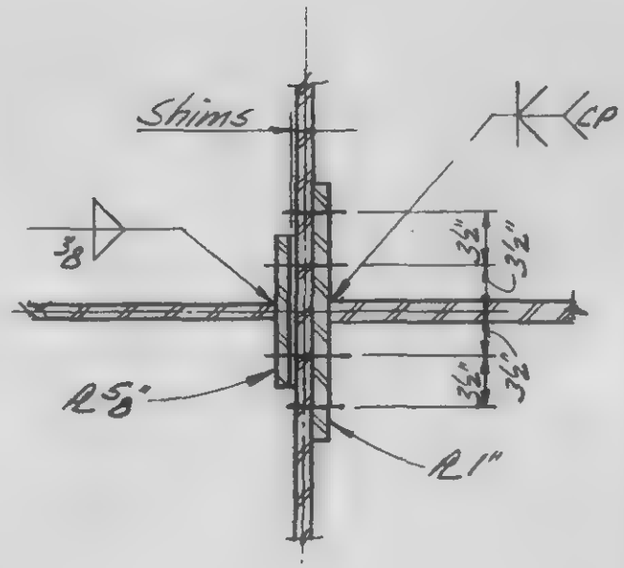

B

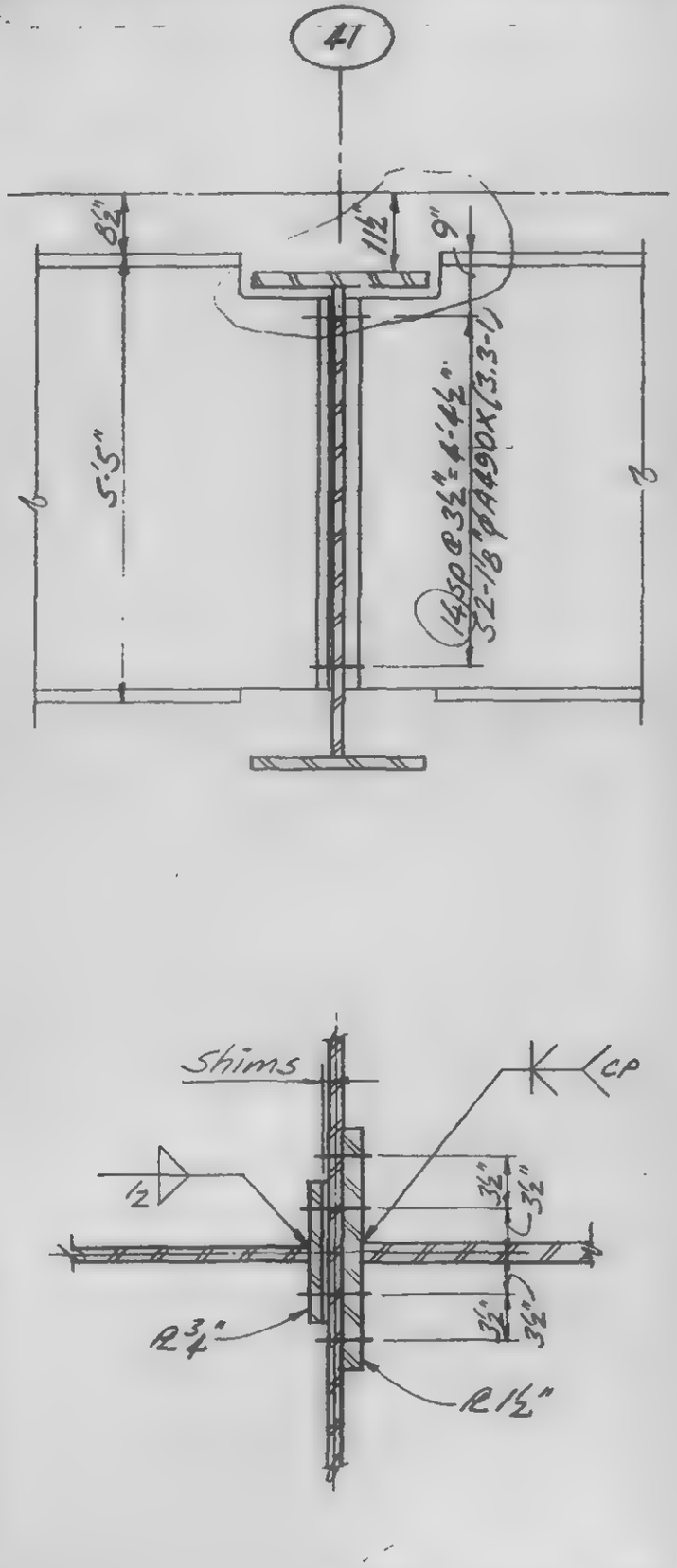

C

LICENSED PROFESSIONAL ENGINEER — LESLIE E. ROBERTSON — No 34360 — UNIVERSITY OF THE STATE OF NEW YORK

DESIGNED

DRAWN

REVIEWED

13-K3.3-3

SKILLING, HELLE, CHRISTIANSEN, ROBERTSON — Structural & Civil Engineers

PROJECT: THE WORLD TRADE CENTER

TITLE: GIRDER CONNECTION DETAILS

DATE: 11-3-72

REVISIONS

Released for construction 11-20-72

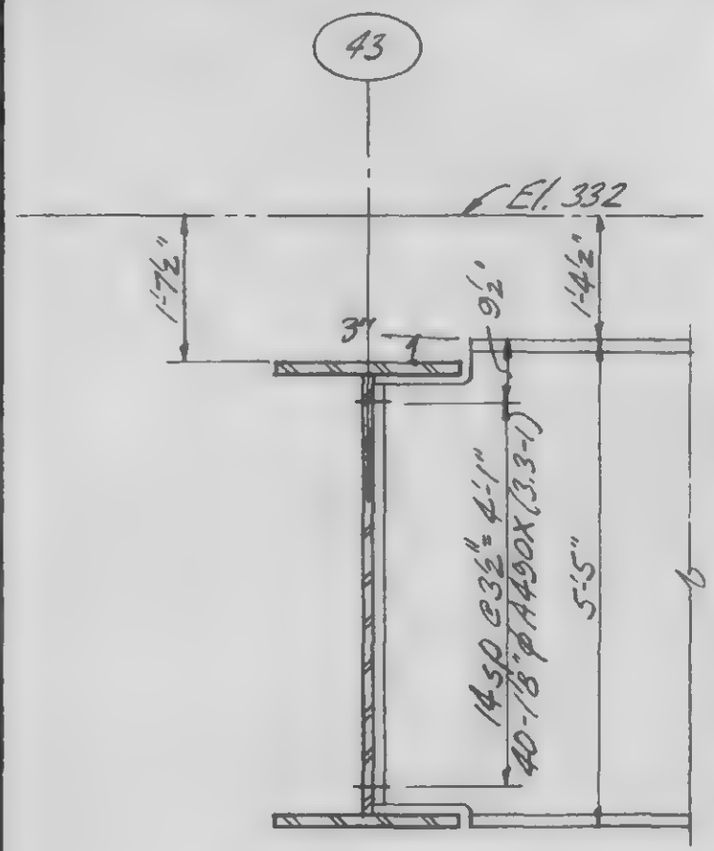

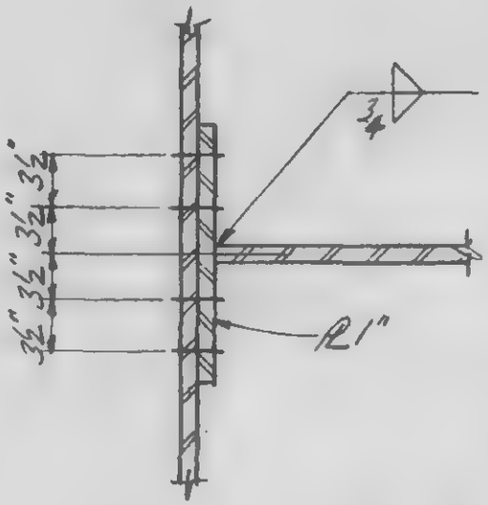

3.3-4

A

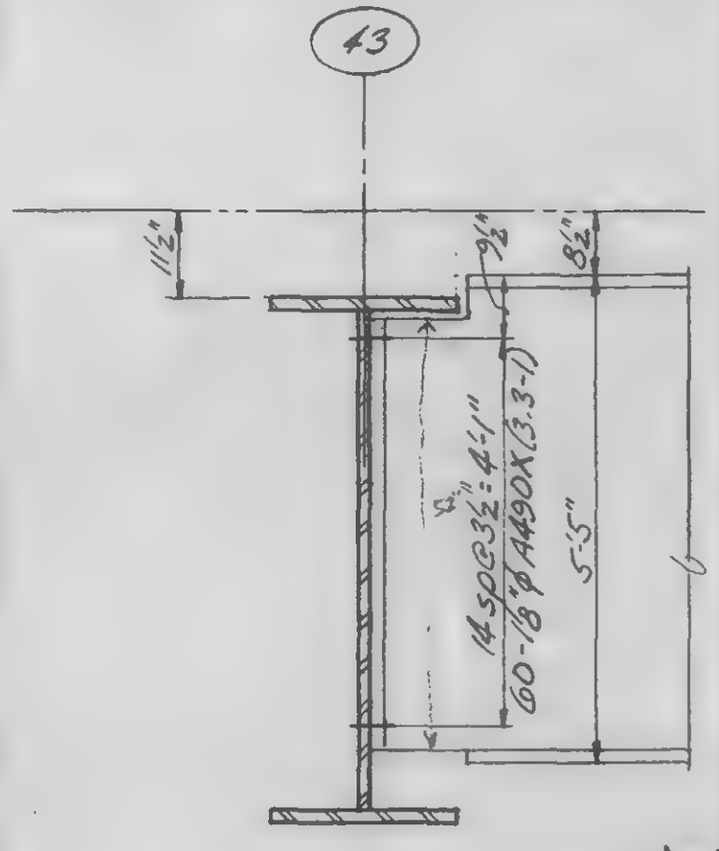

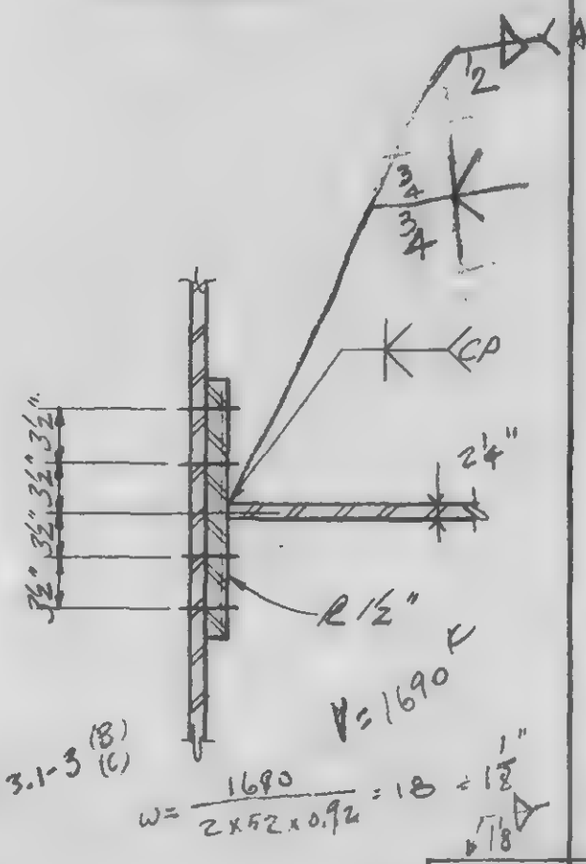

G 3.1-3 (B) (C)

$w = \frac{1690}{2 \times 52 \times 0.92} = 18 \div 1\frac{1}{8}"$

V = 1690 K

B

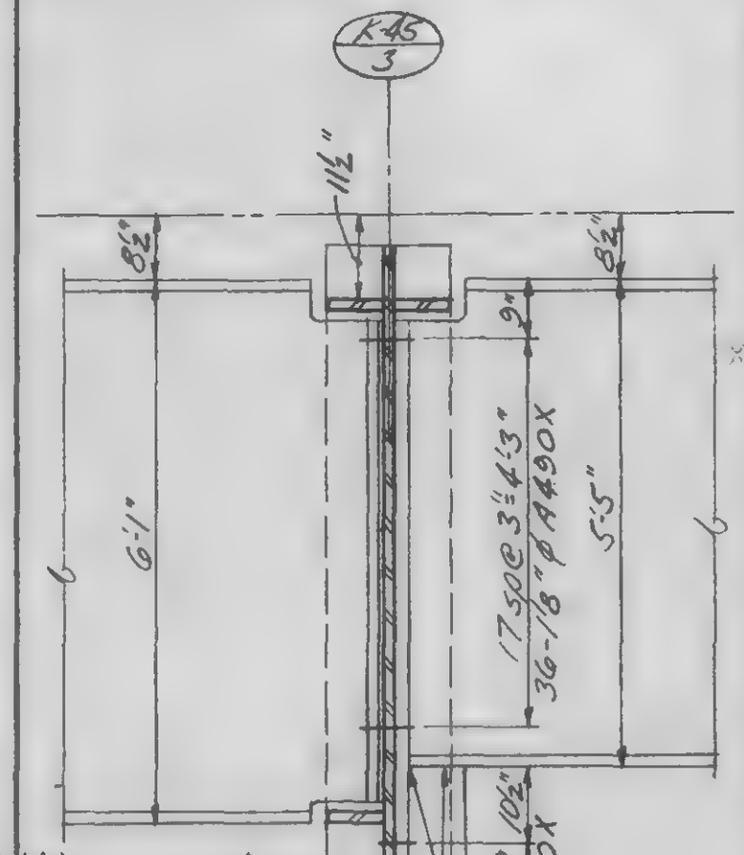

C

13-K3.3-4

LICENSED PROFESSIONAL ENGINEER — LESLIE E. ROBERTSON — No 34360 — UNIVERSITY OF THE STATE OF NEW YORK

DESIGNED

DRAWN

REVIEWED

SKILLING, HELLE, CHRISTIANSEN, ROBERTSON — Structural [illegible] Engineers

PROJECT: THE WORLD TRADE CENTER

TITLE: GIRDER CONNECTION DETAILS

DATE: 11-3-72

REVISIONS

Released for construction 11-20-72

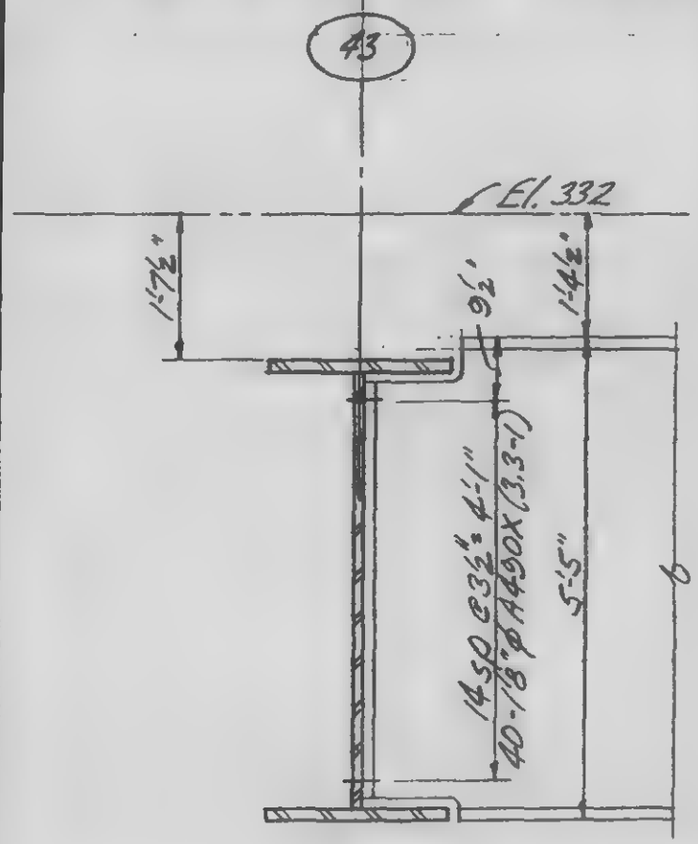

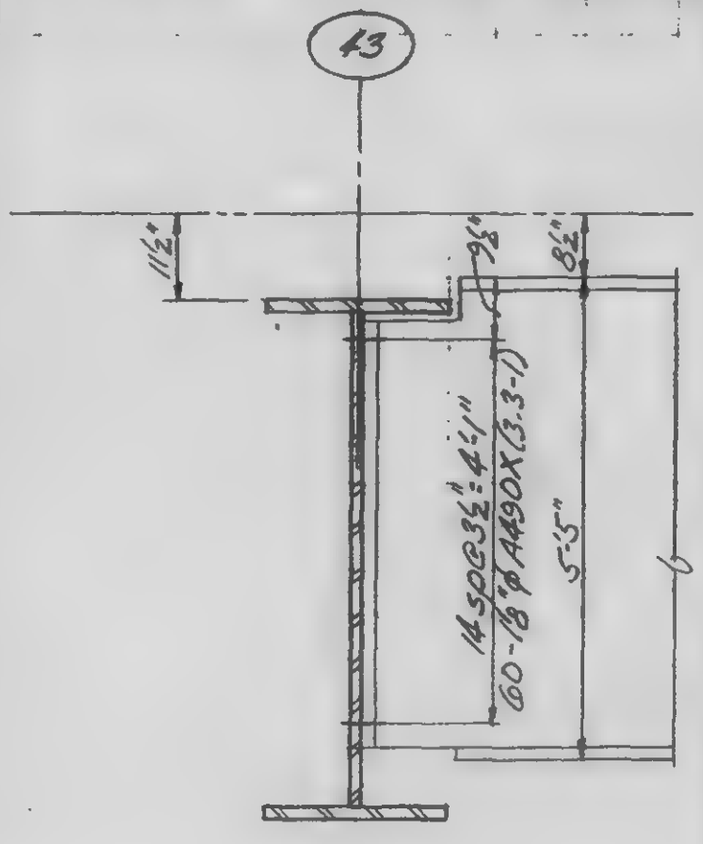

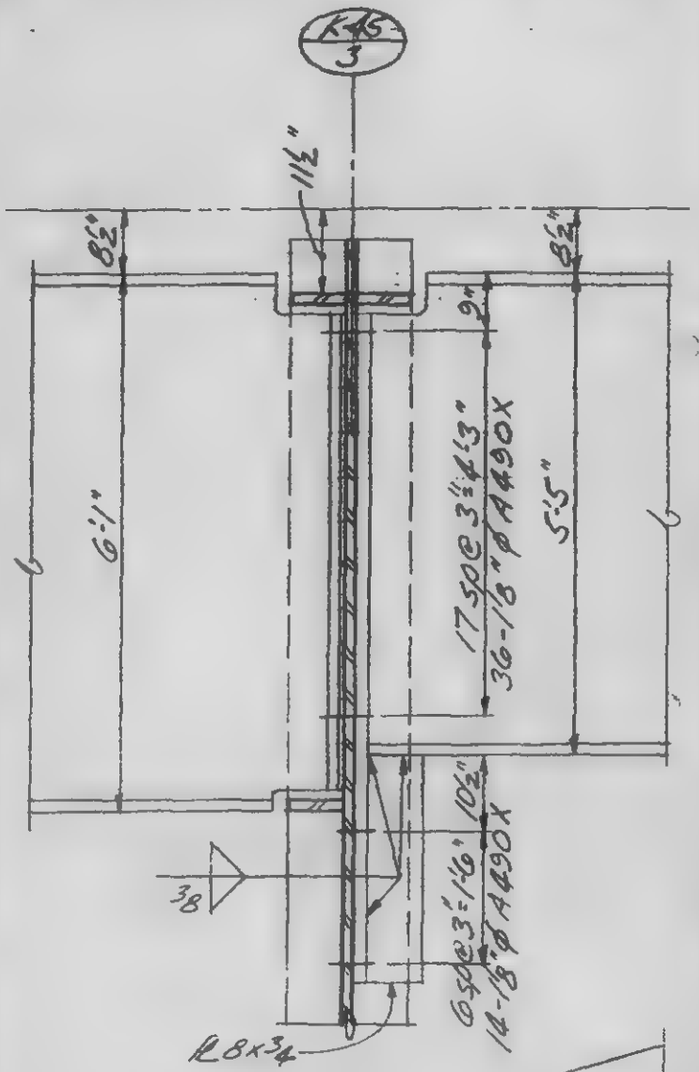

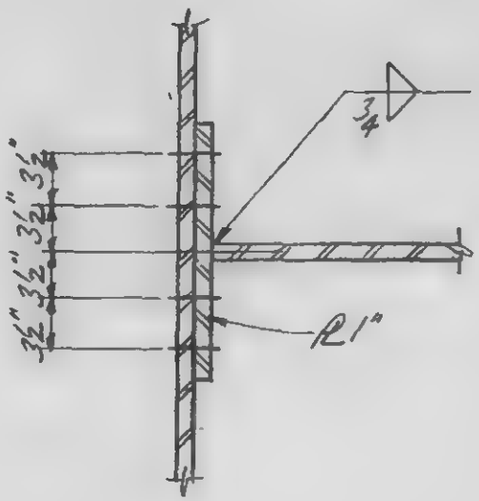

A

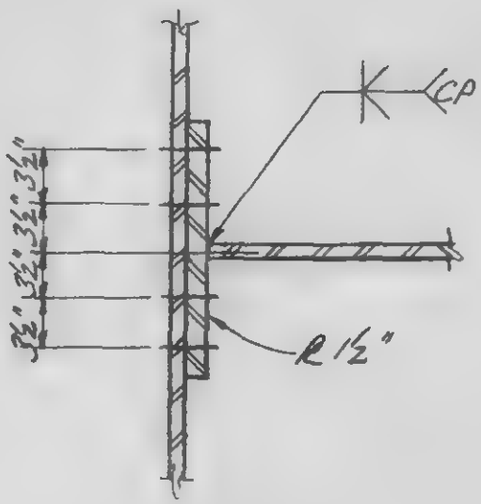

B

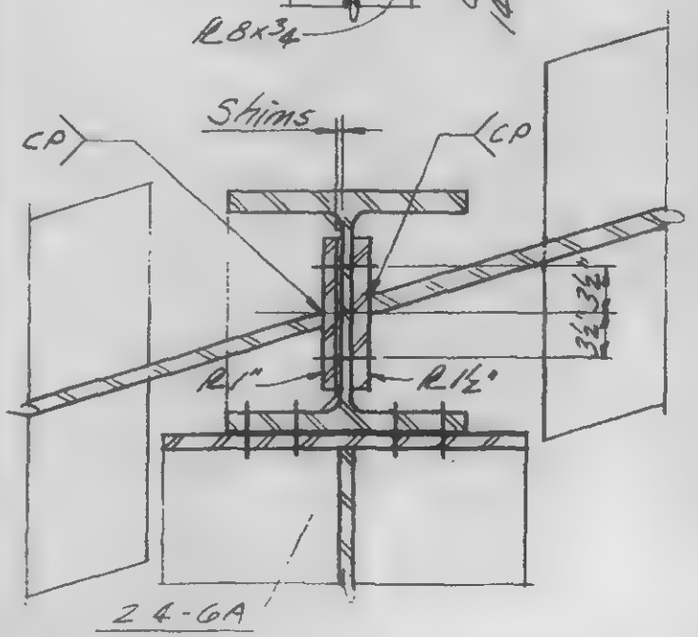

C

13-K3.3-4

LICENSED PROFESSIONAL ENGINEER
LESLIE E. ROBERTSON
No 34360
UNIVERSITY OF THE STATE OF NEW YORK

DESIGNED

DRAWN

REVIEWED

SKILLING, HELLE, CHRISTIANSEN, ROBERTSON — Structural & Civil Engineers

PROJECT: THE WORLD TRADE CENTER | TITLE: GIRDER CONNECTION DETAILS | DATE: 11-3-72

REVISIONS

Released for construction 11-20-72

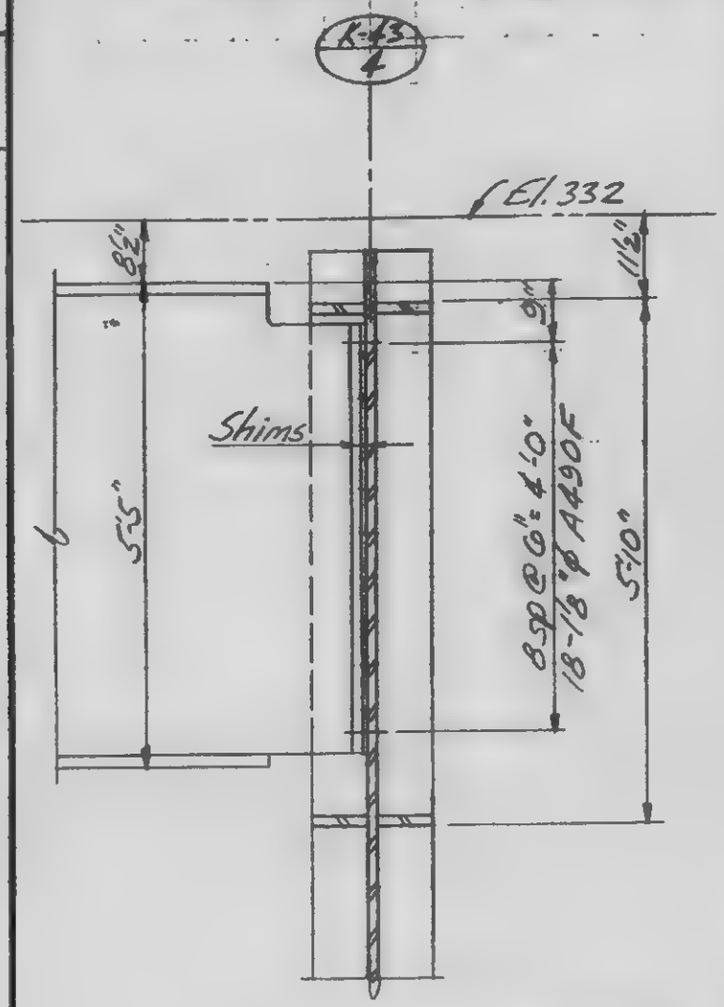

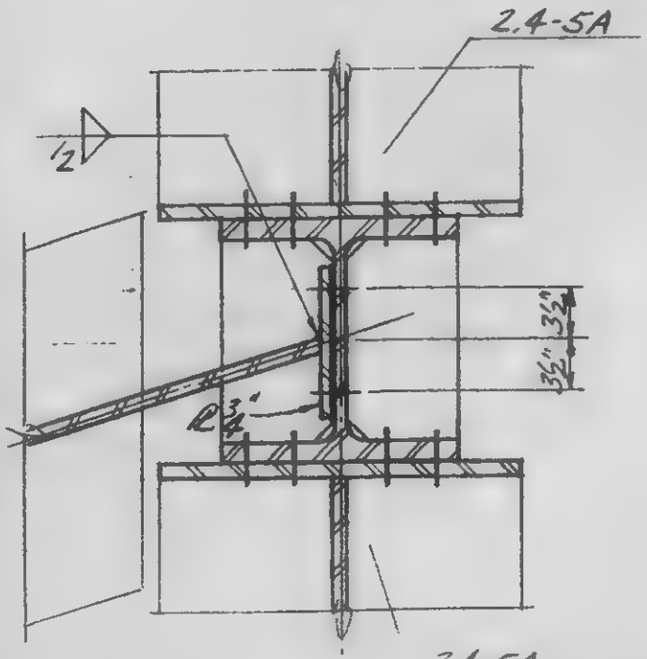

A

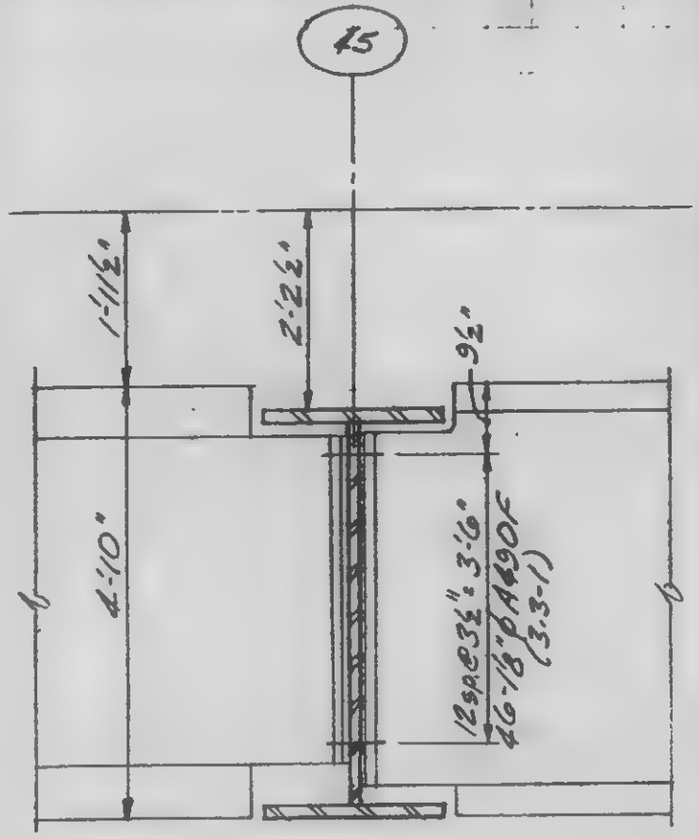

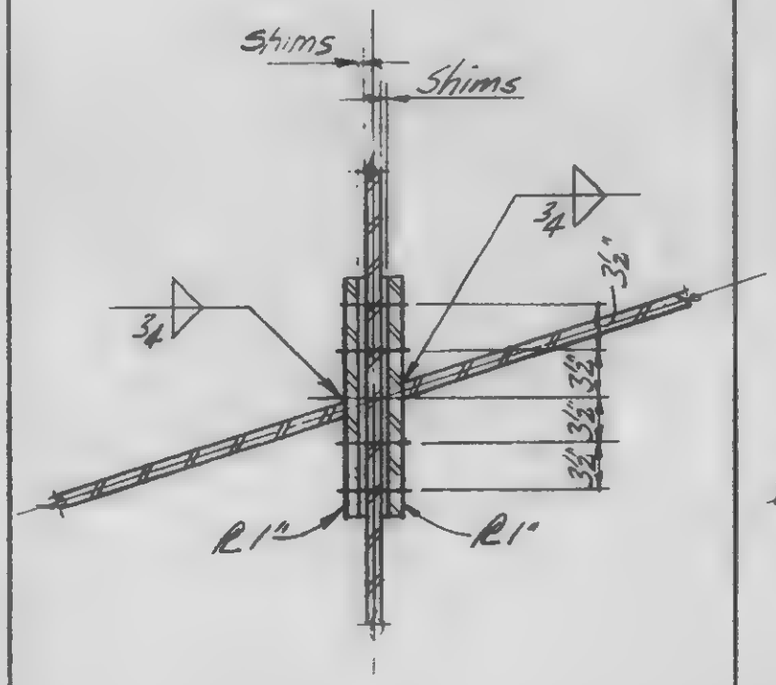

B

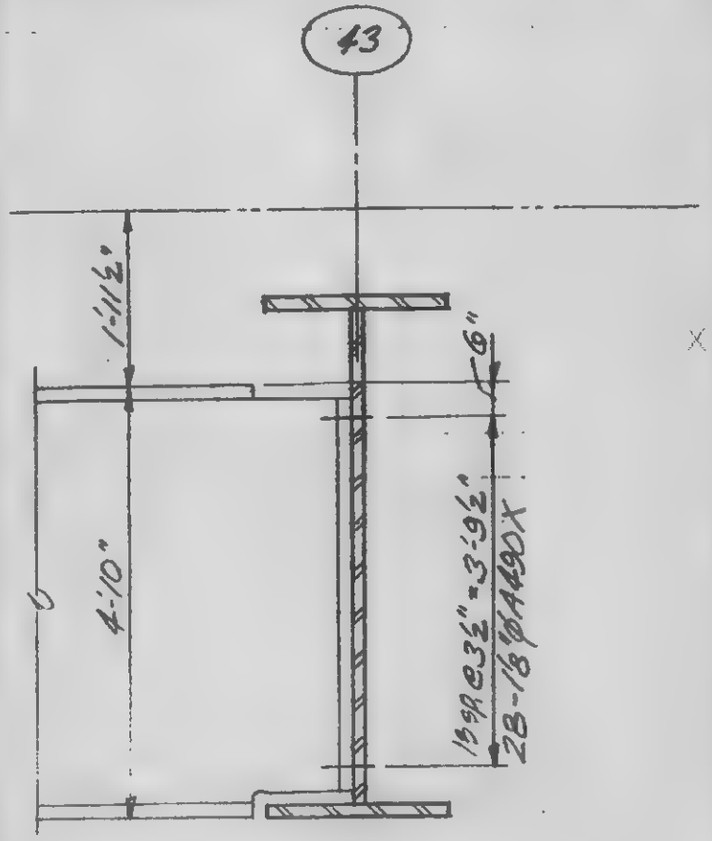

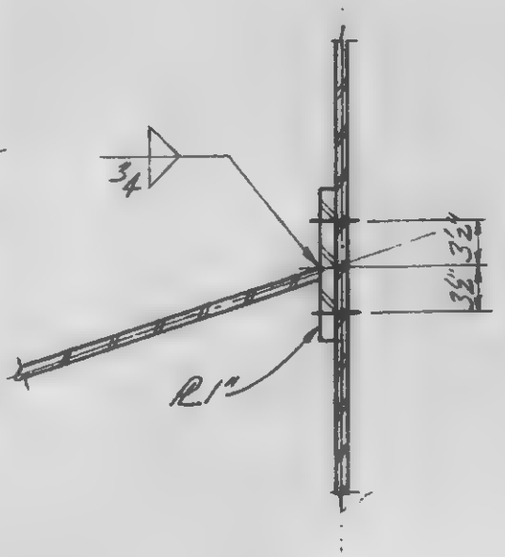

C

LICENSED PROFESSIONAL ENGINEER — LESLIE E. ROBERTSON — No 34360 — UNIVERSITY OF THE STATE OF NEW YORK

DESIGNED

DRAWN

REVIEWED

13-K3.3-5

SKILLING, HELLE, CHRISTIANSEN, ROBERTSON — Structural & Civil Engineers

PROJECT: THE WORLD TRADE CENTER | TITLE: GIRDER CONNECTION DETAILS | DATE: 11-3-72

REVISIONS

Released for construction 11-20-72

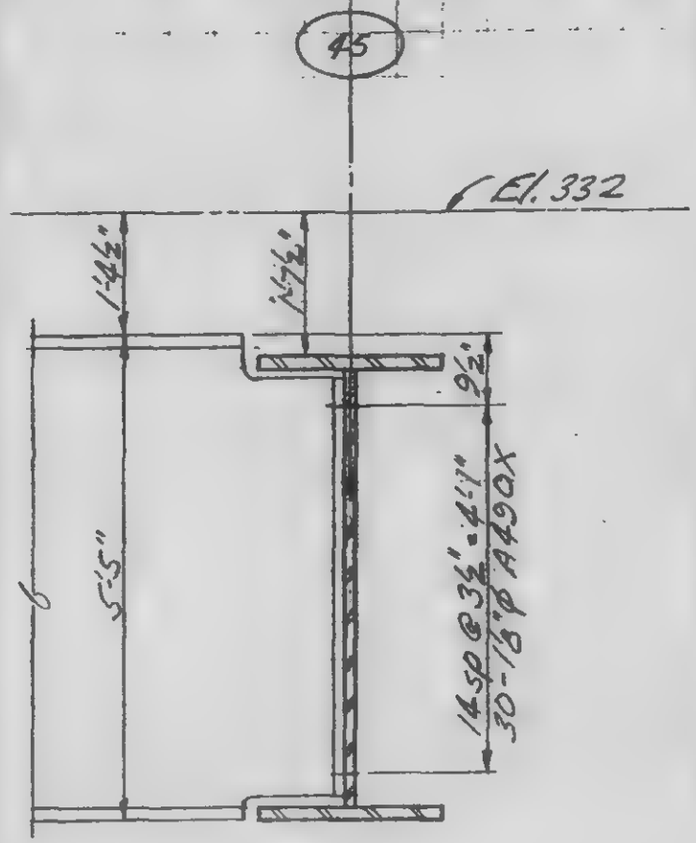

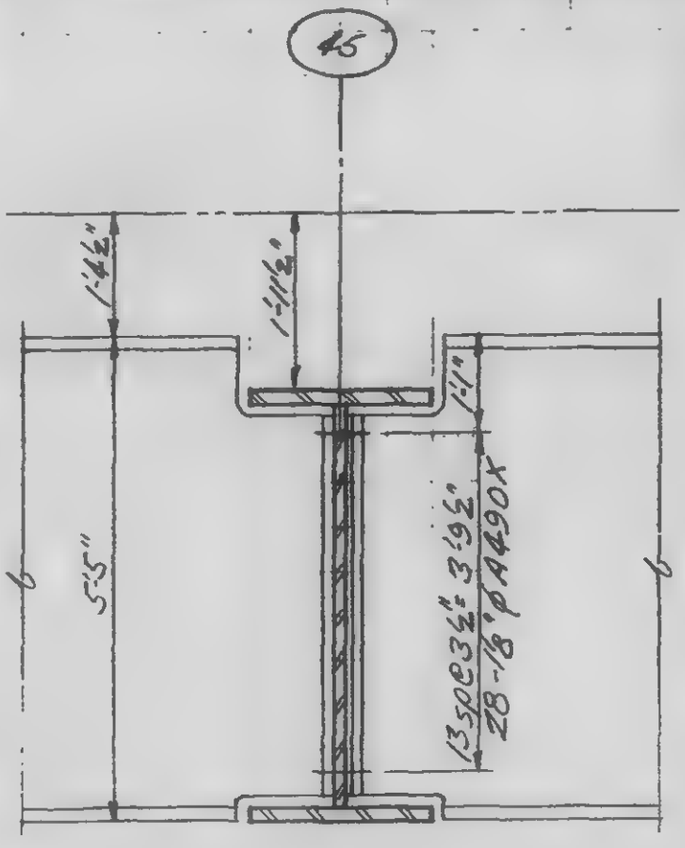

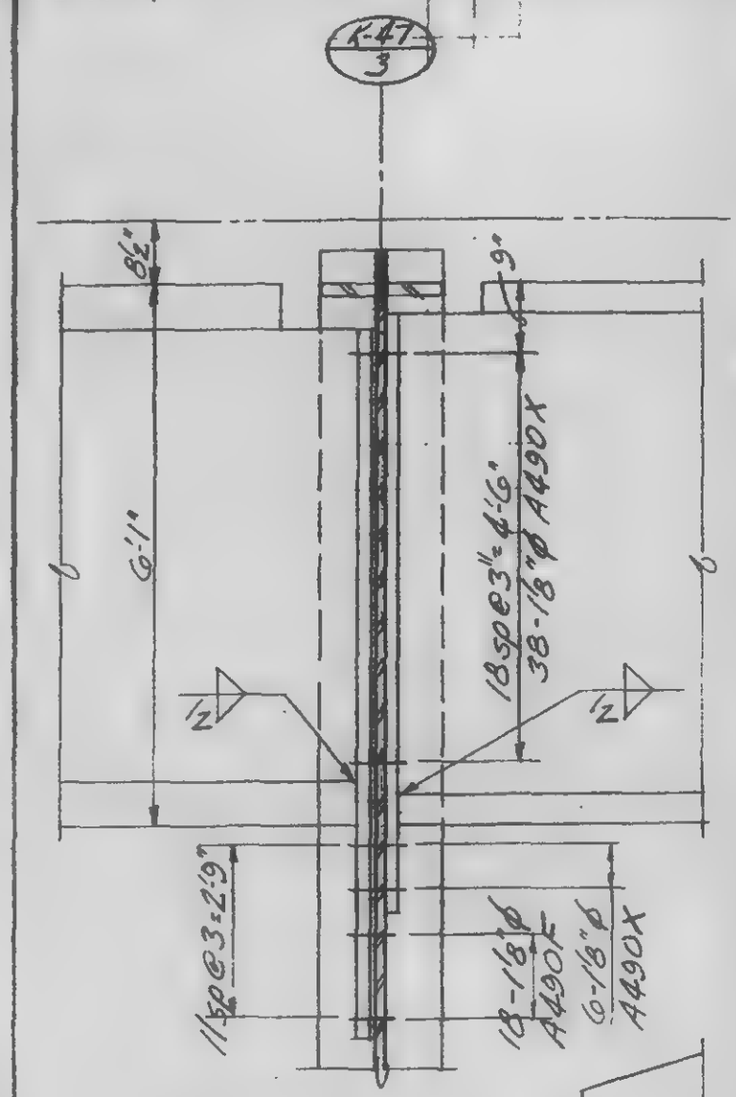

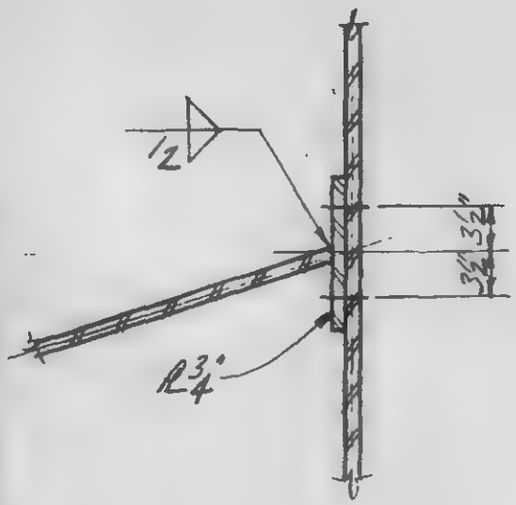

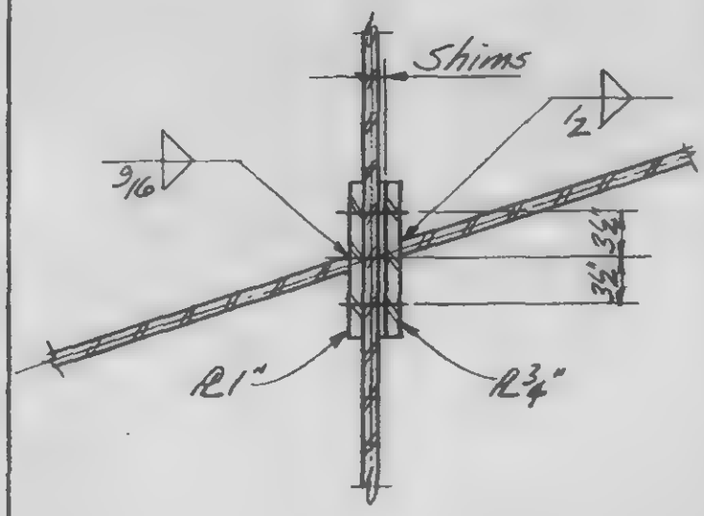

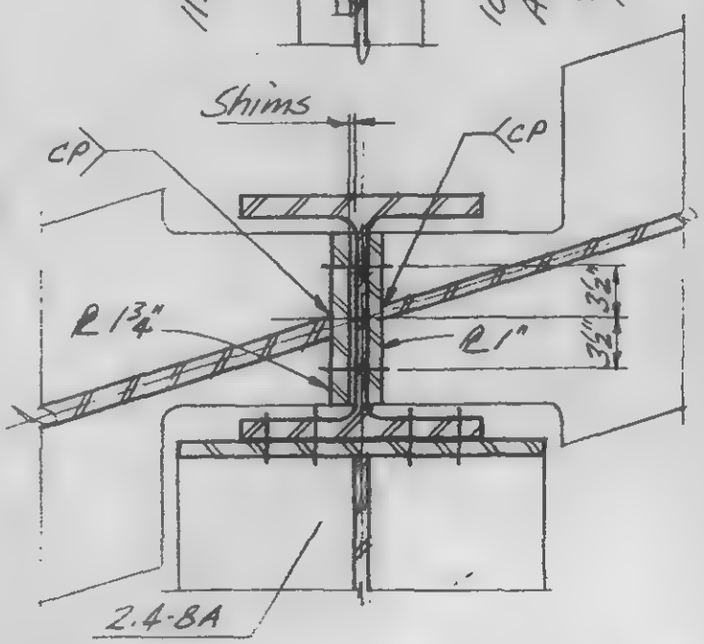

LICENSED PROFESSIONAL ENGINEER — LESLIE E. ROBERTSON — No 34360 — UNIVERSITY OF THE STATE OF NEW YORK

DESIGNED

DRAWN

REVIEWED

A | B | C

13-K3.3-6

SKILLING, HELLE, CHRISTIANSEN, ROBERTSON — Structural & Civil Engineers

PROJECT: THE WORLD TRADE CENTER | TITLE: GIRDER CONNECTION DETAILS | DATE: 11-3-72

REVISIONS

Released for construction 11-20-72

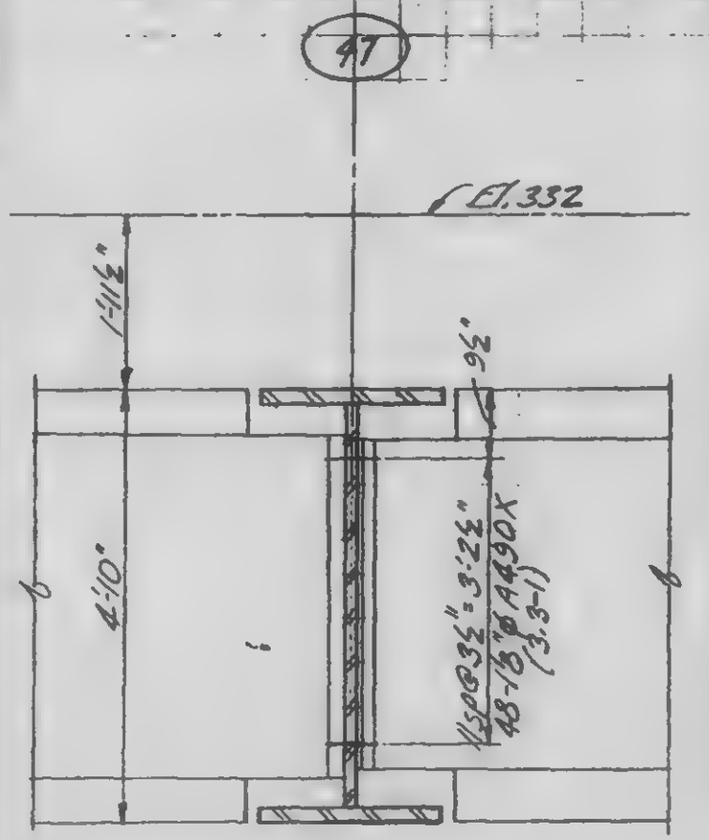

A

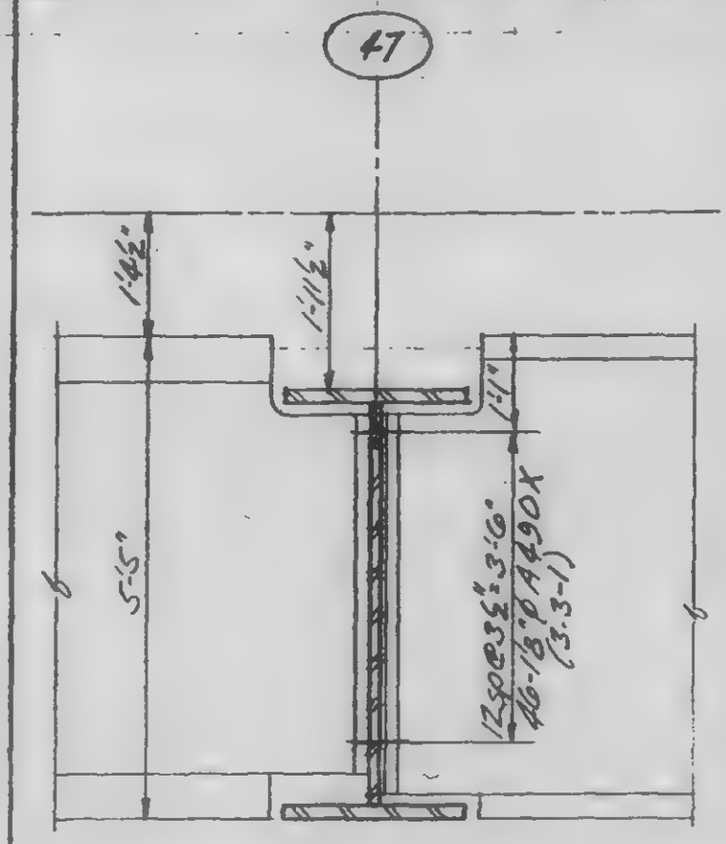

B

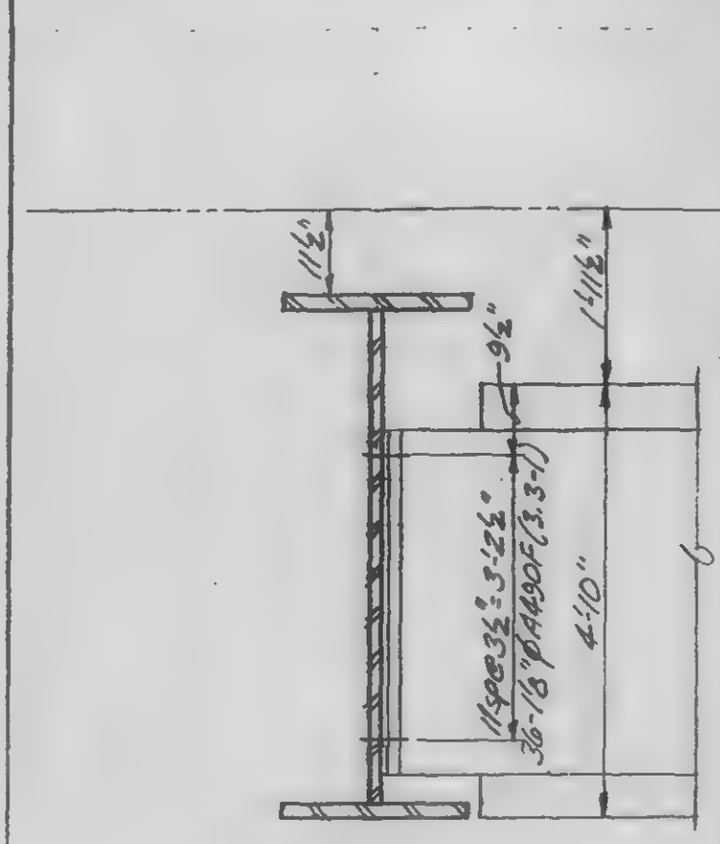

C

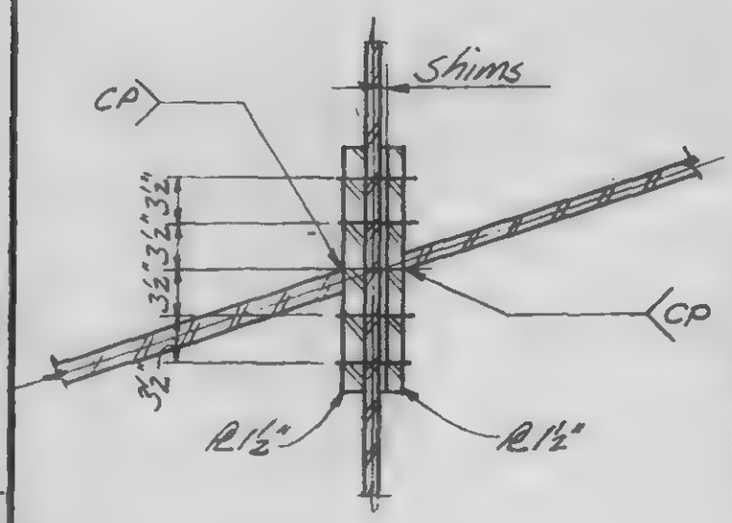

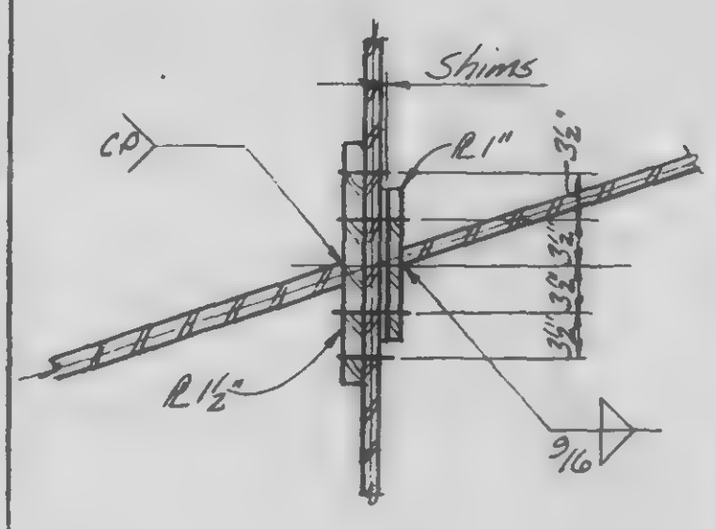

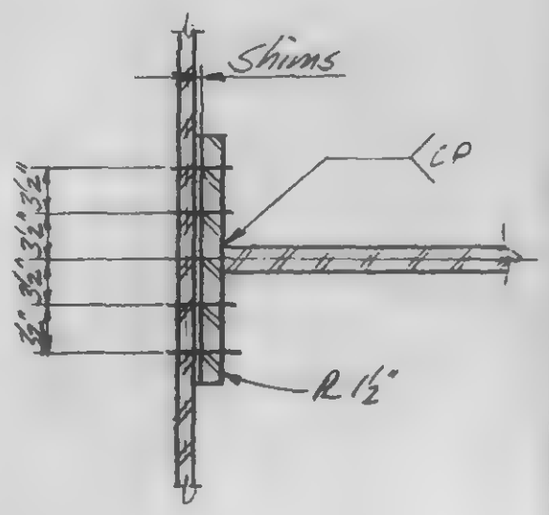

LICENSED PROFESSIONAL ENGINEER — LESLIE E. ROBERTSON — No 34360 — UNIVERSITY OF THE STATE OF NEW YORK

DESIGNED

DRAWN

REVIEWED

13-K3.3-7

SKILLING, HELLE, CHRISTIANSEN, ROBERTSON — Structural & Civil Engineers

PROJECT: THE WORLD TRADE CENTER | TITLE: GIRDER CONNECTION DETAILS | DATE: 11-3-72

REVISIONS

Released for construction 11-20-72

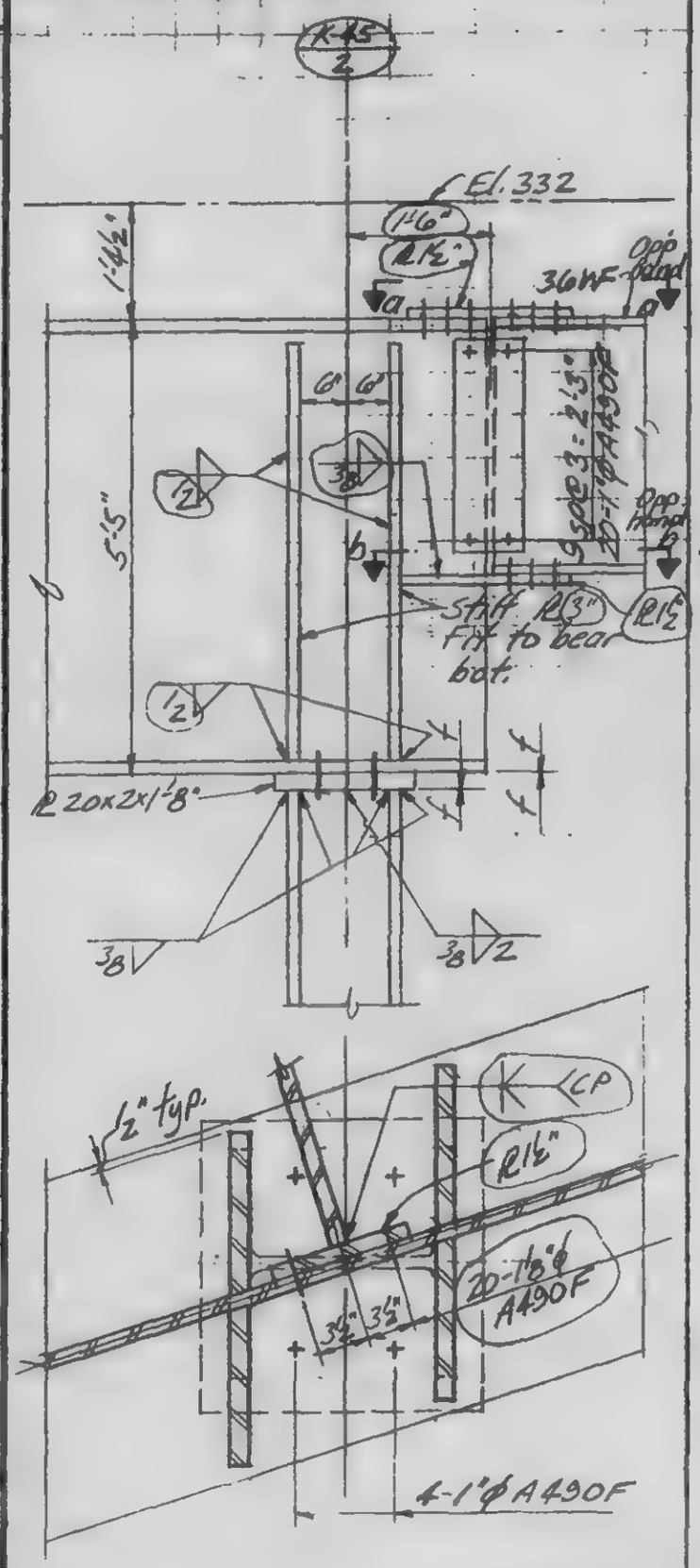

A

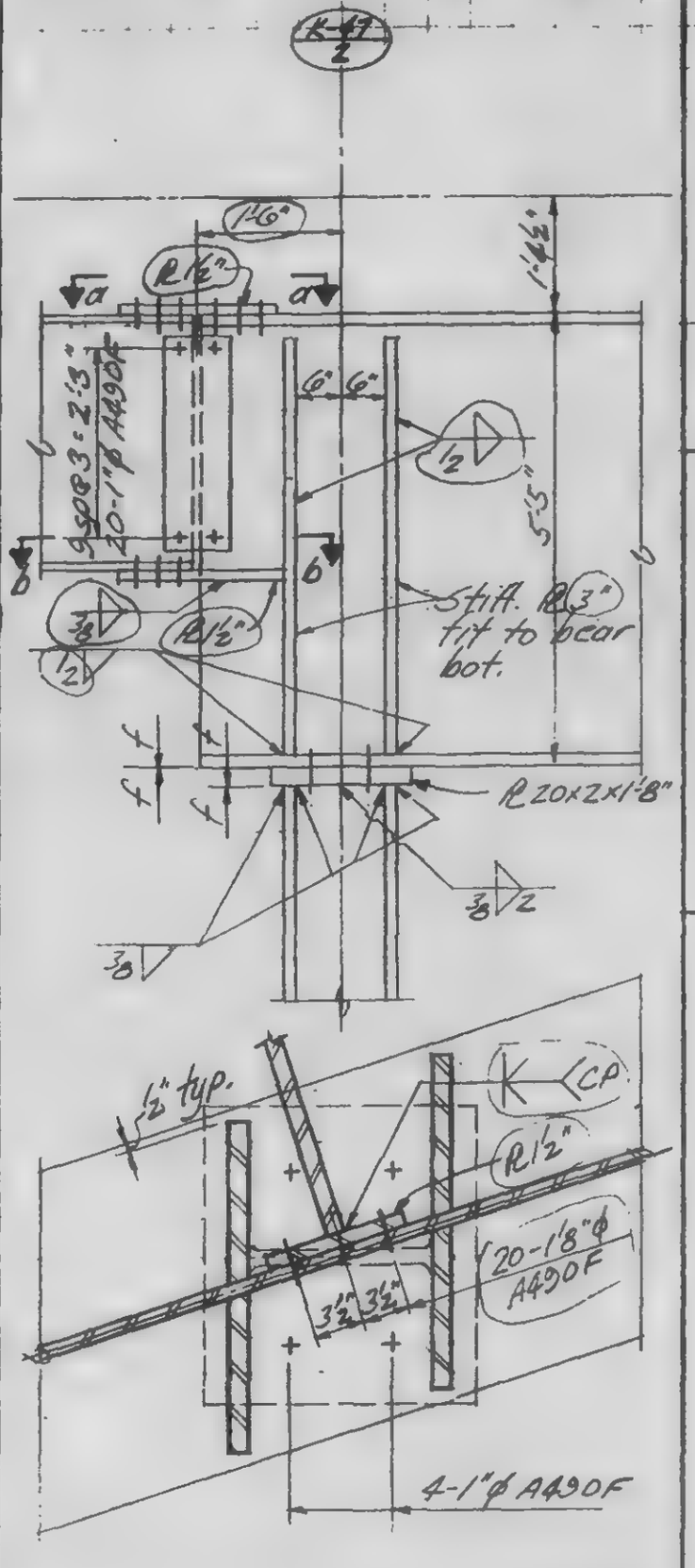

B

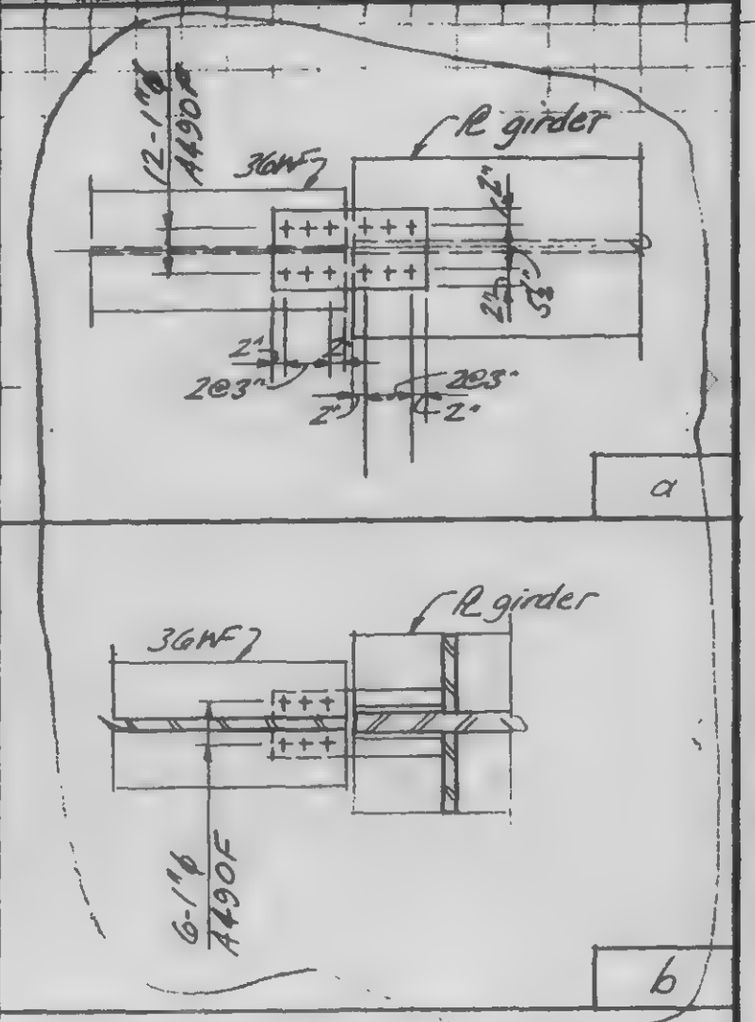

LICENSED PROFESSIONAL ENGINEER — LESLIE E. ROBERTSON — No 34360 — UNIVERSITY OF THE STATE OF NEW YORK

DESIGNED

DRAWN

REVIEWED

13-K3.3-8

SKILLING, HELLE, CHRISTIANSEN, ROBERTSON — Structural & Civil Engineers

PROJECT: THE WORLD TRADE CENTER

TITLE: GIRDER CONNECTION DETAILS

DATE: 11-3-72

REVISIONS

Released for construction 11-20-72

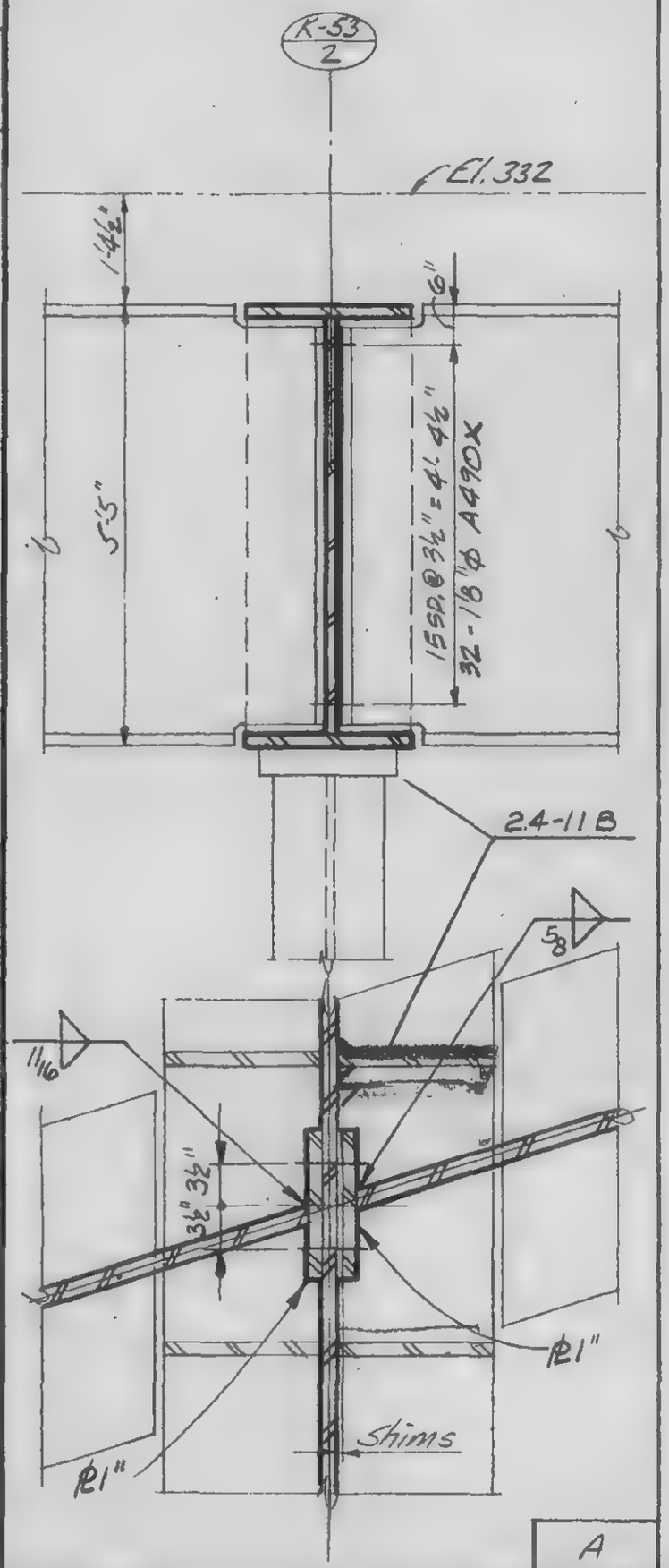

A

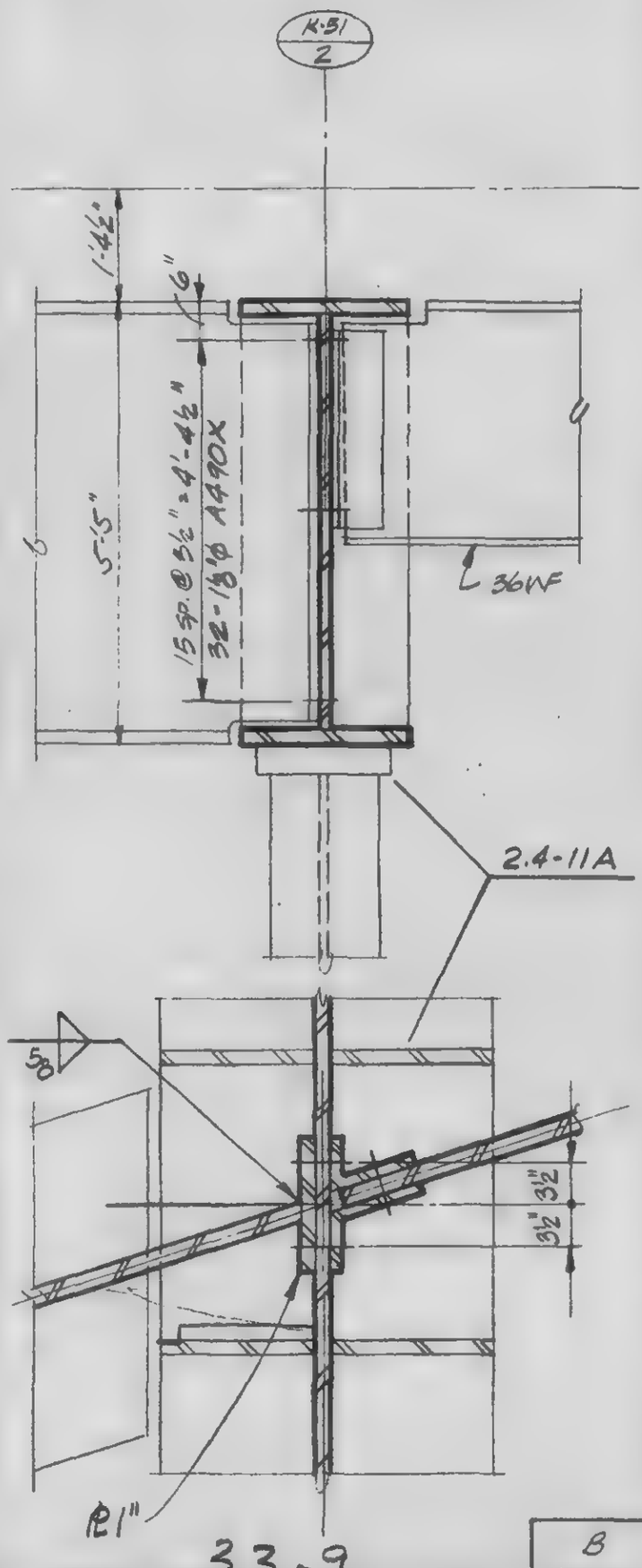

B

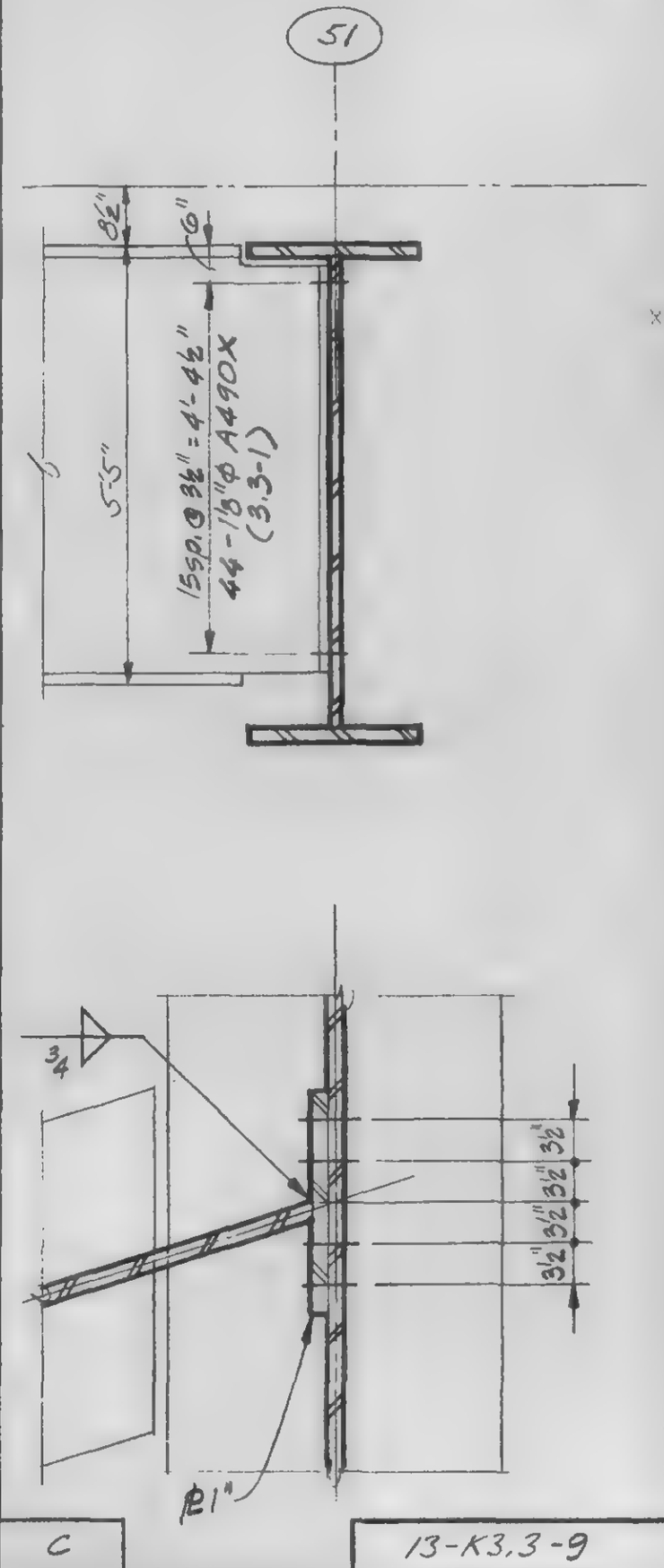

C

3.3-9

13-K3.3-9

LICENSED PROFESSIONAL ENGINEER
LESLIE E. ROBERTSON
No 34980
UNIVERSITY OF THE STATE OF NEW YORK

DESIGNED

DRAWN

REVIEWED

SKILLING, HELLE, CHRISTIANSEN, ROBERTSON — Structural & Civil Engineers

PROJECT THE WORLD TRADE CENTER | TITLE GIRDER CONNECTION DETAILS | DATE 11-5-72

REVISIONS

Released for construction 11-20-72

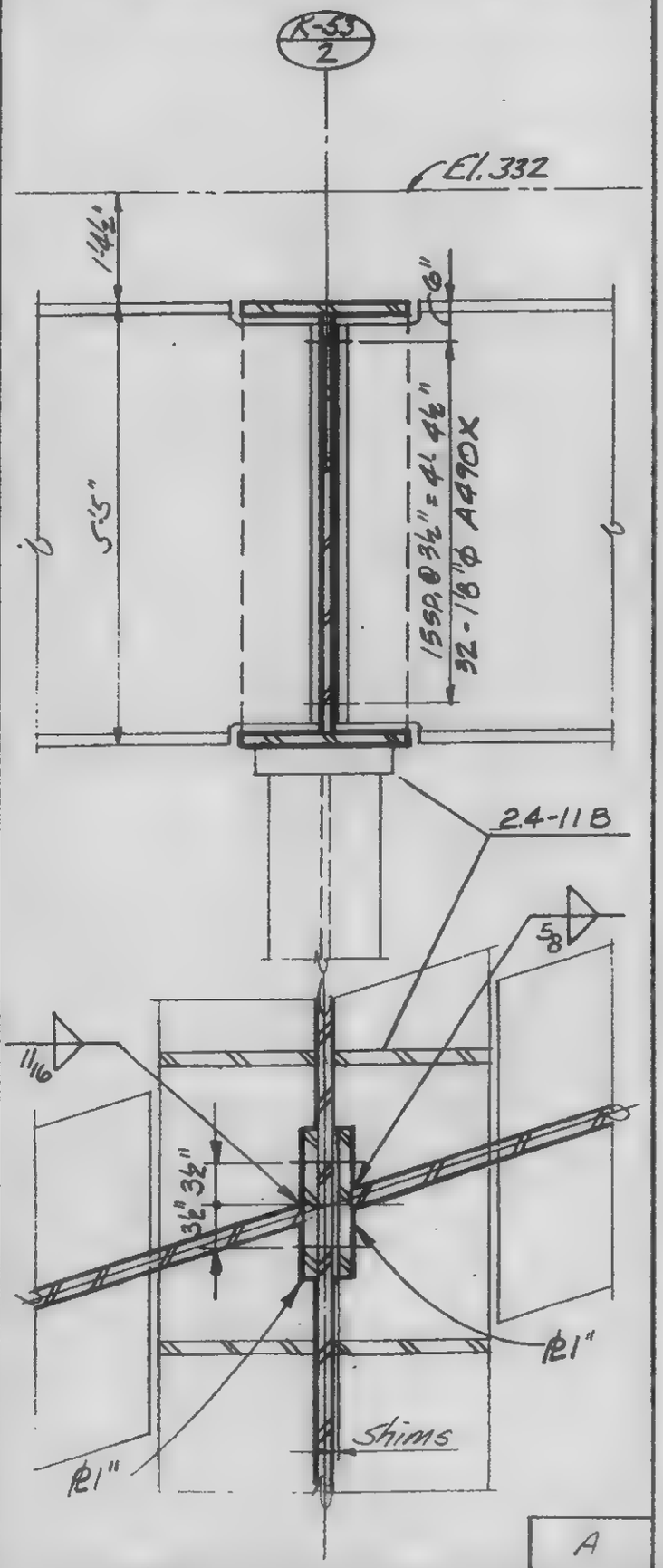

A

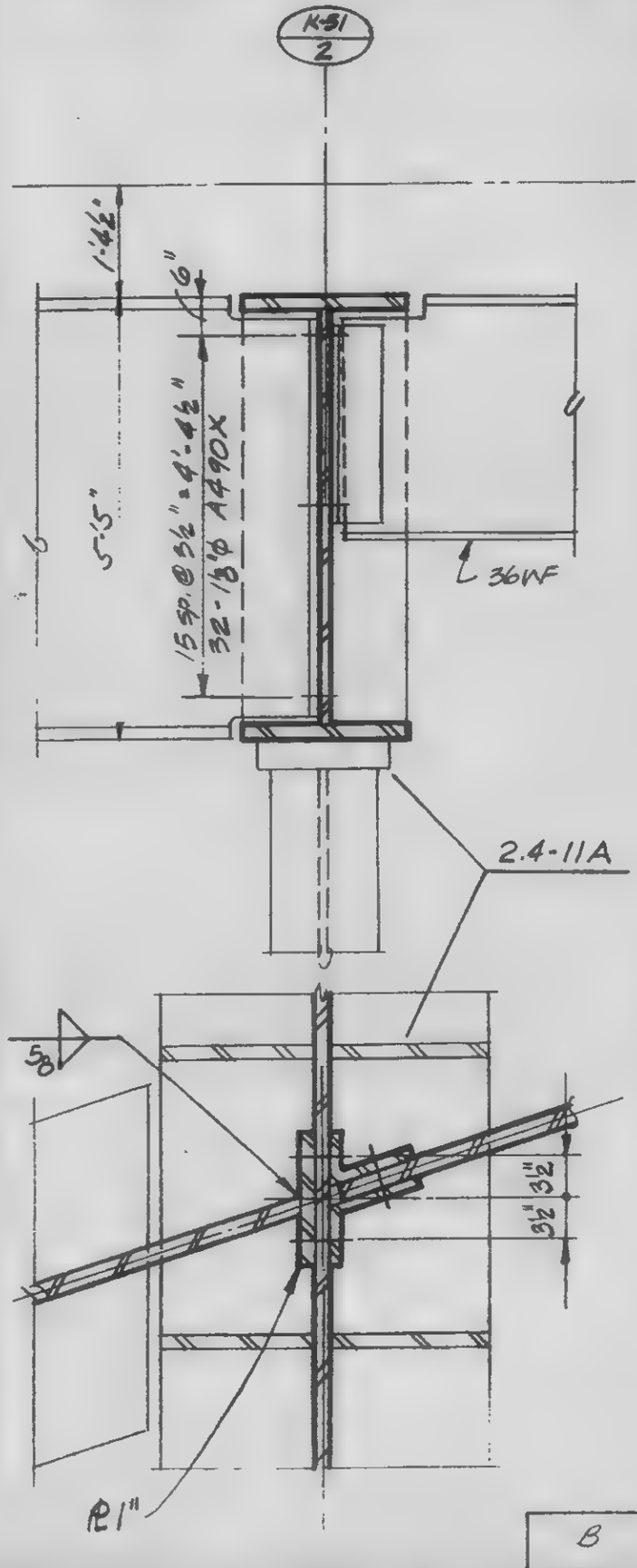

B

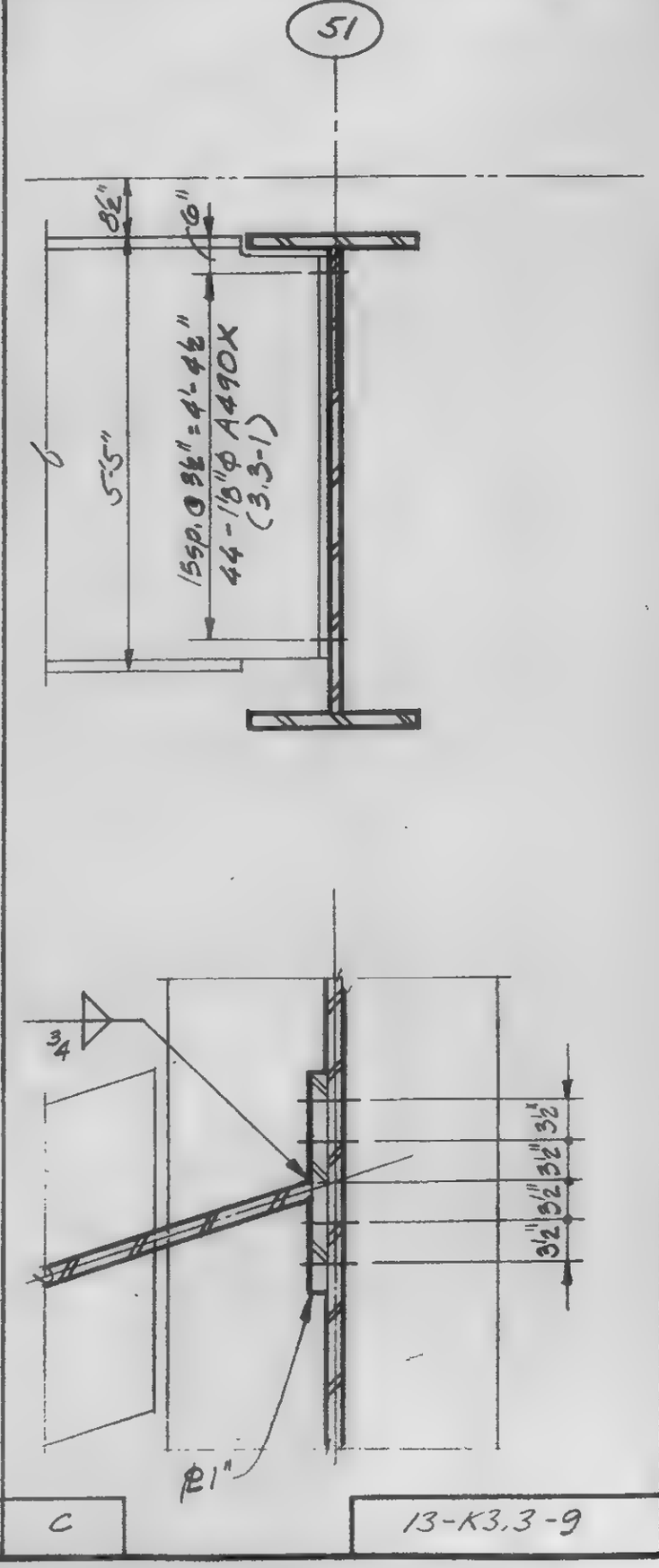

C

13-K3.3-9

LICENSED PROFESSIONAL ENGINEER
LESLIE E. ROBERTSON
No. 24360
UNIVERSITY OF THE STATE OF NEW YORK

DESIGNED

DRAWN

CHECKED

SKILLING, HELLE, CHRISTIANSEN, ROBERTSON — Structural & Civil Engineers

PROJECT: THE WORLD TRADE CENTER | TITLE: GIRDER CONNECTION DETAILS | DATE: 11-3-72

REVISIONS

Released for construction 11-20-72

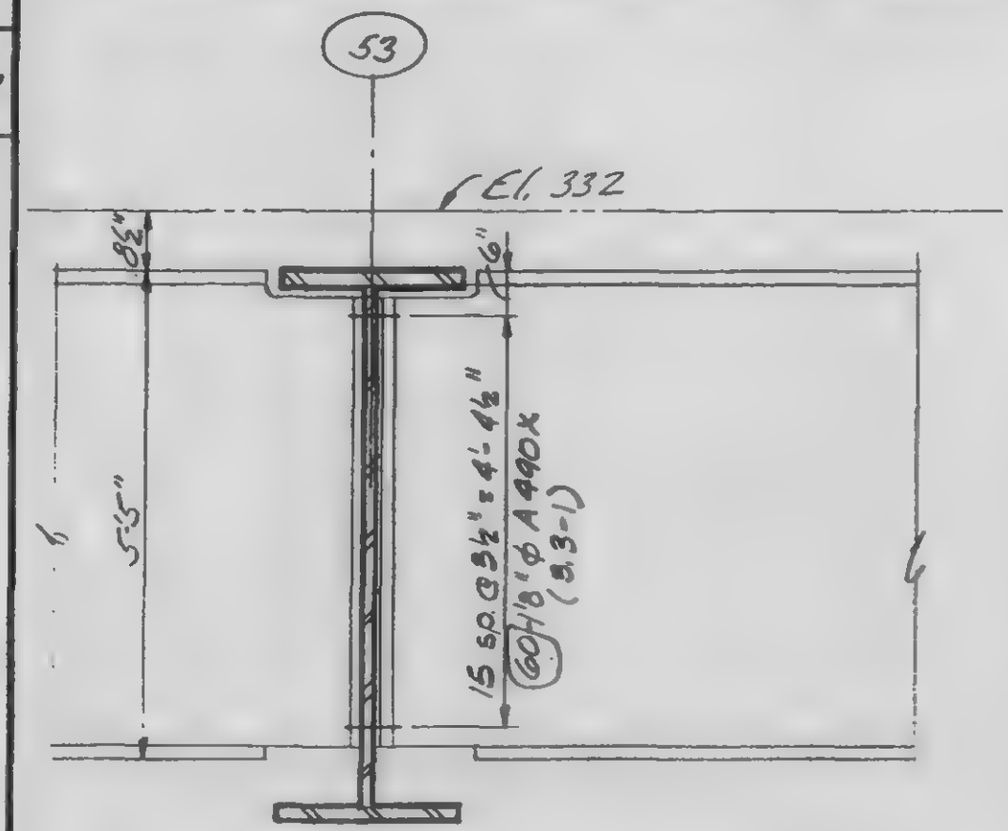

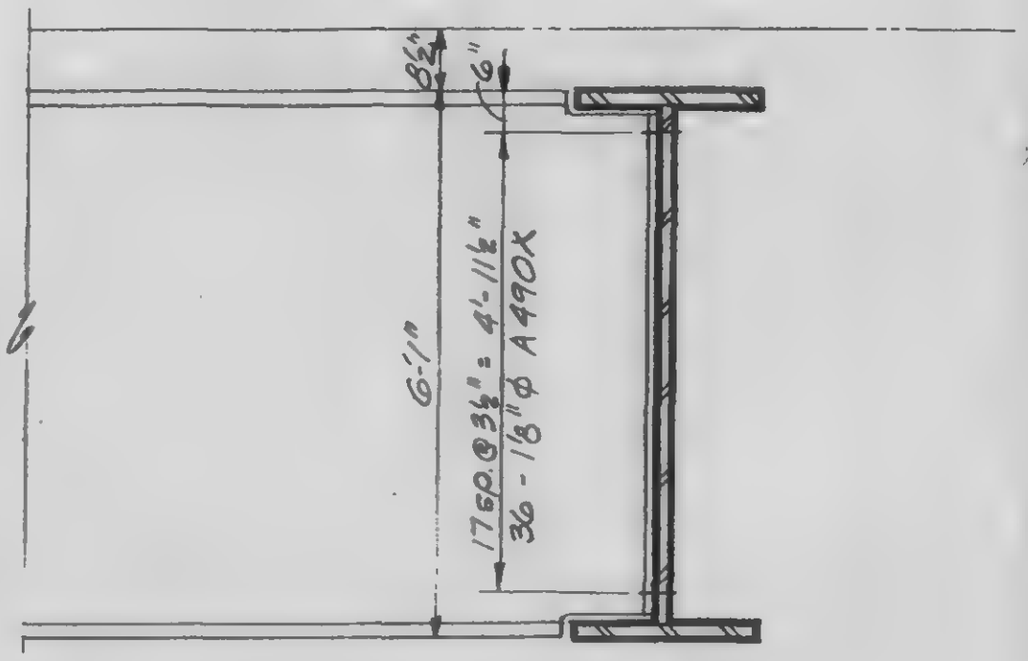

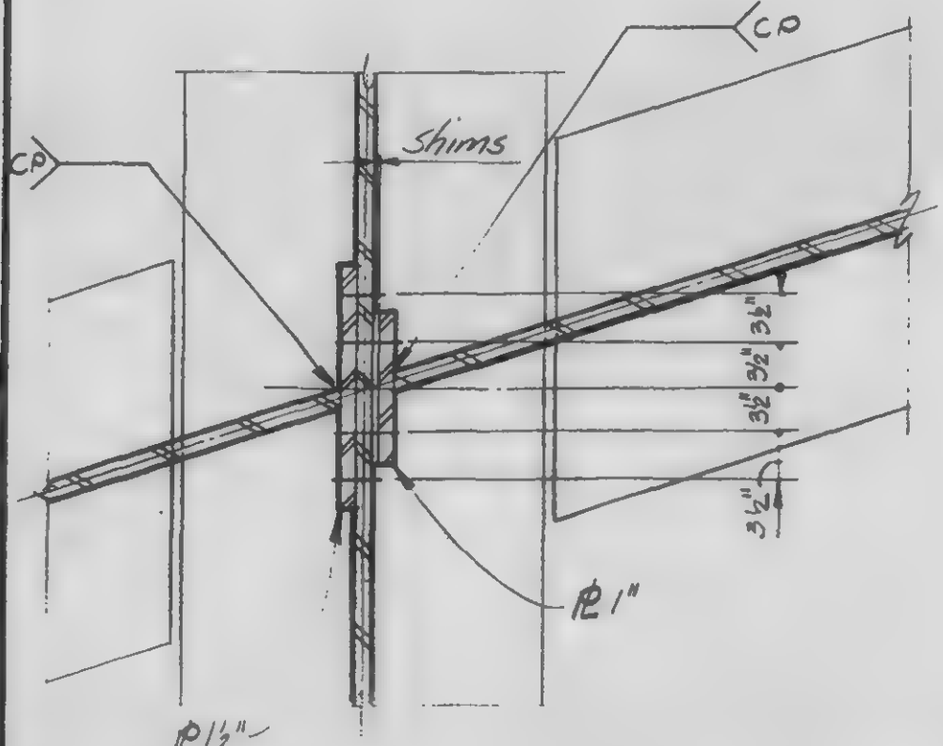

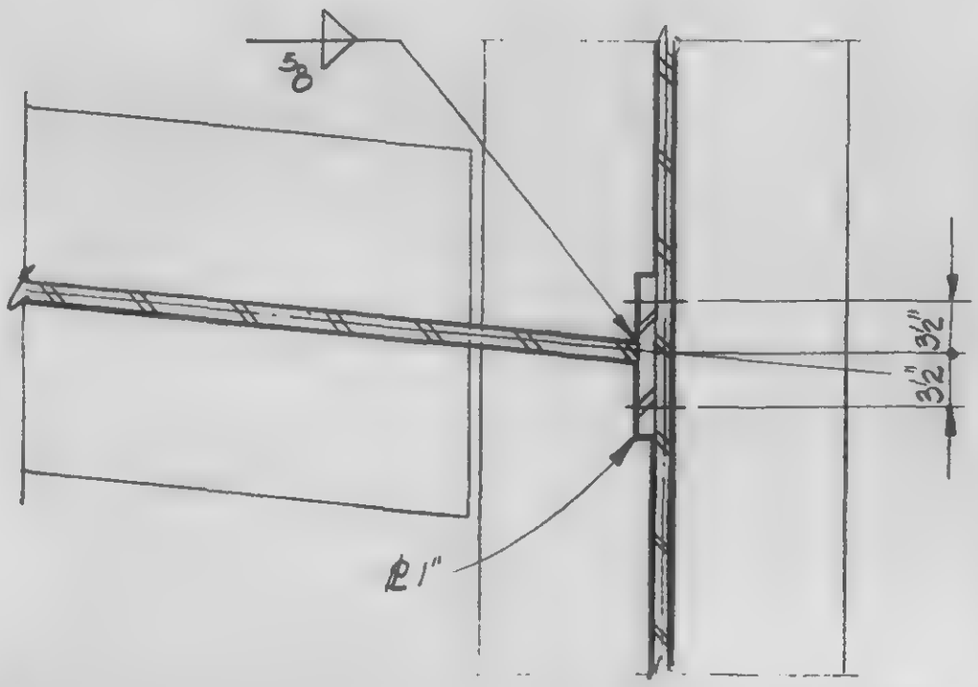

LICENSED PROFESSIONAL ENGINEER — LESLIE E. ROBERTSON — No. 34360 — UNIVERSITY OF THE STATE OF NEW YORK

DESIGNED

DRAWN

REVIEWED

A | B

13-K3.3-10

SKILLING, HELLE, CHRISTIANSEN, ROBERTSON — Structural & Civil Engineers

PROJECT: THE WORLD TRADE CENTER

TITLE: GIRDER CONNECTION DETAILS

DATE: 11-3-72

REVISIONS

Released for construction 11-20-72

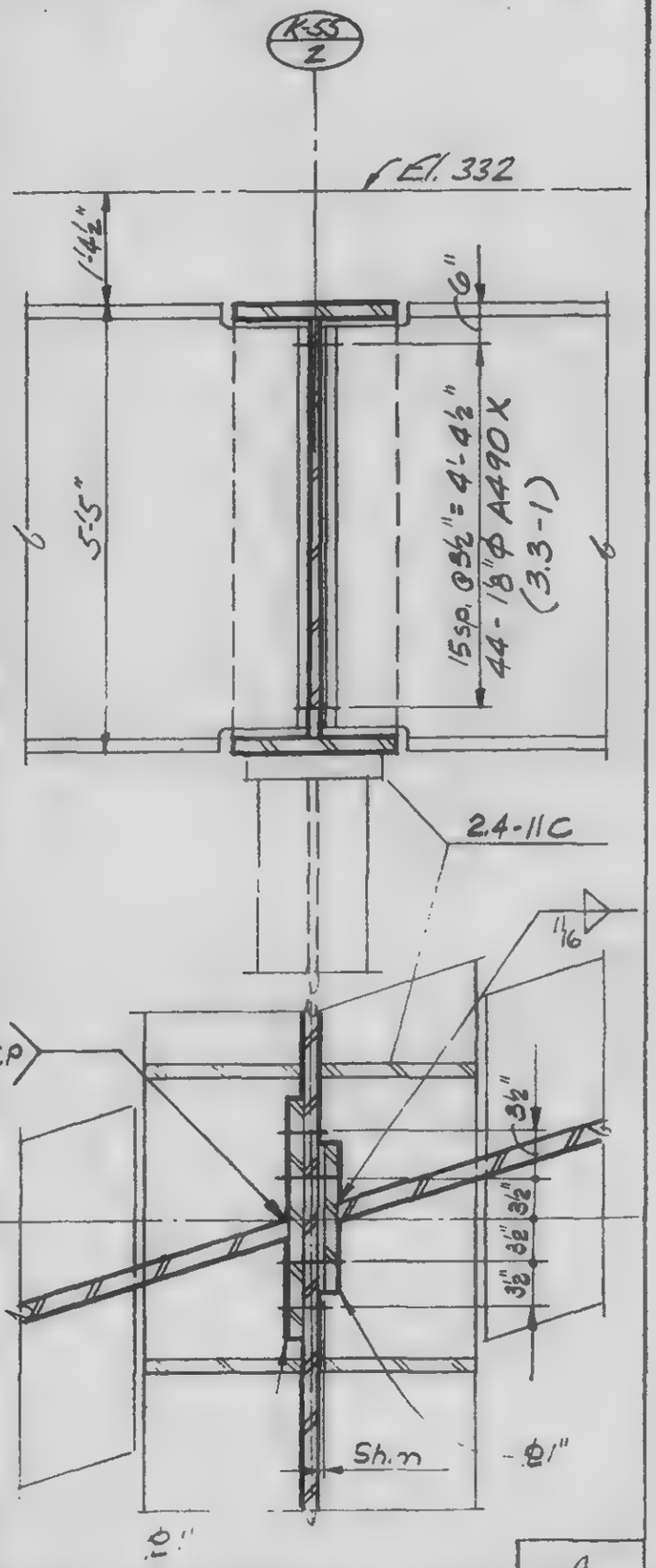

A

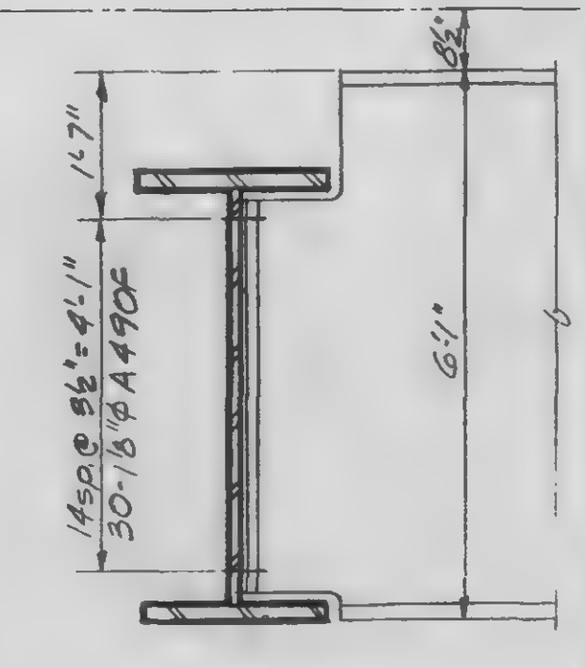

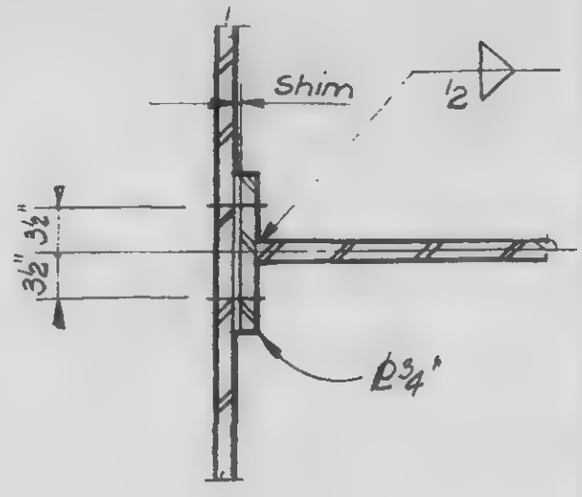

B

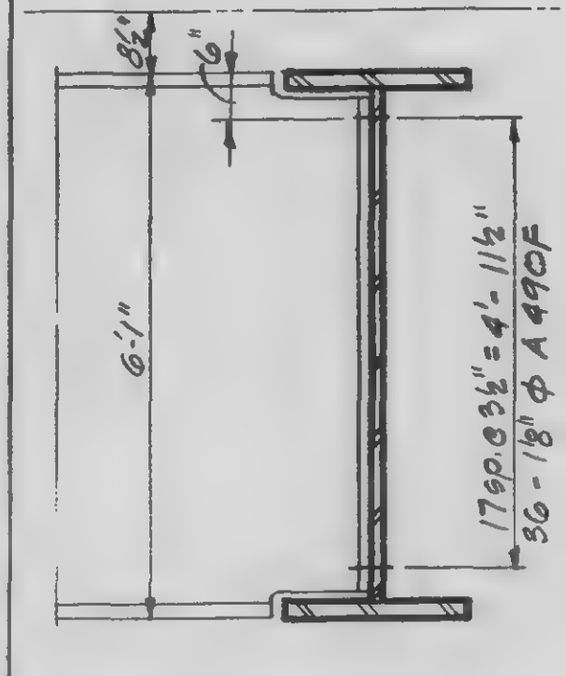

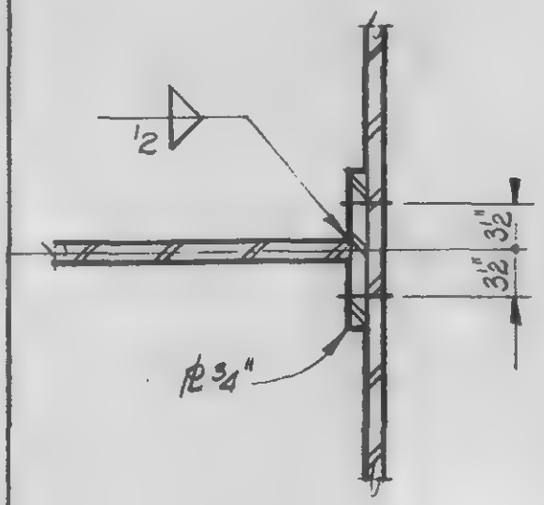

C

LICENSED PROFESSIONAL ENGINEER
LESLIE E. ROBERTSON
No 34360
UNIVERSITY OF THE STATE OF NEW YORK

DESIGNED

DRAWN

REVIEWED

13-K3.3-11

SKILLING, HELLE, CHRISTIANSEN, ROBERTSON — Structural & Civil Engineers

PROJECT: THE WORLD TRADE CENTER

TITLE: GIRDER CONNECTION DETAILS

DATE: 11-3-72

REVISIONS

- Released for construction 11-20-72
- 4-20-73
- 6-4-73

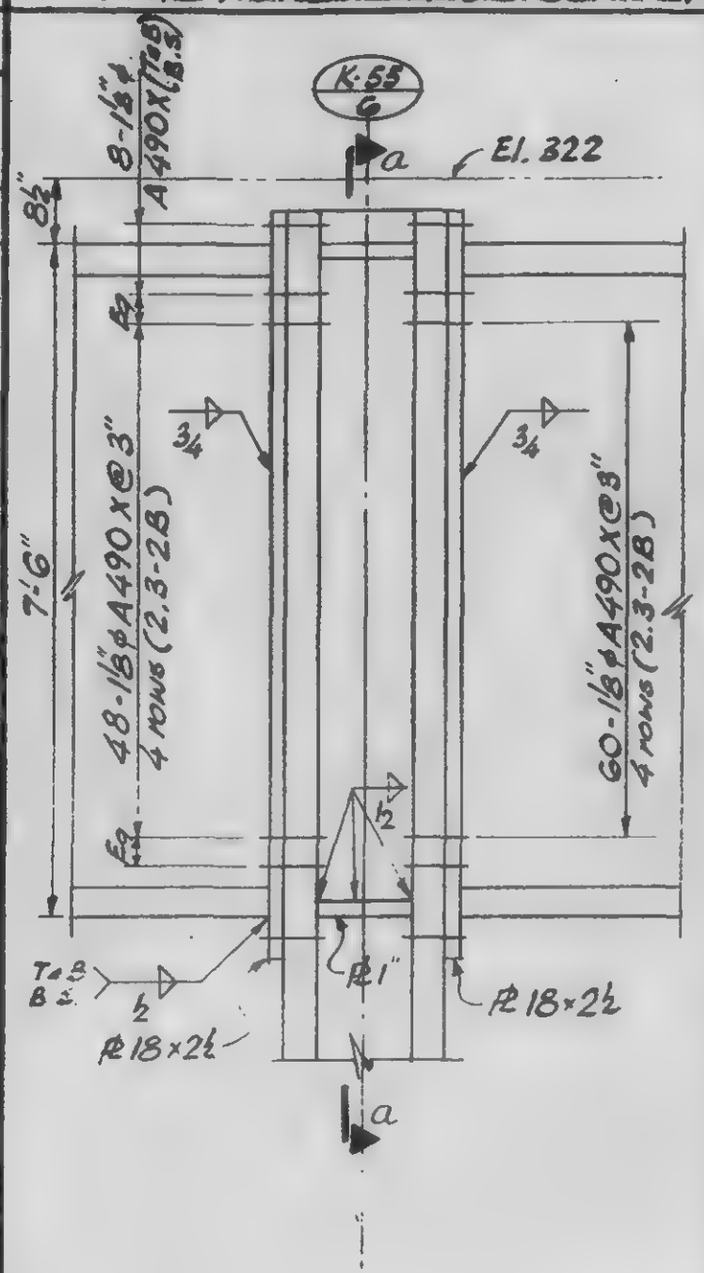

A

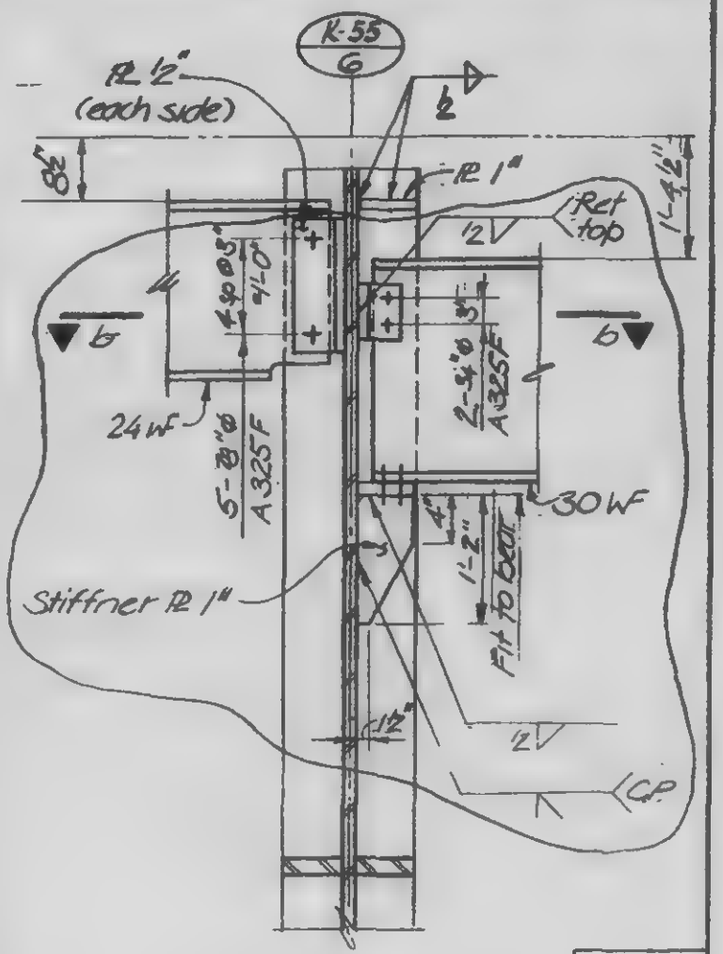

B

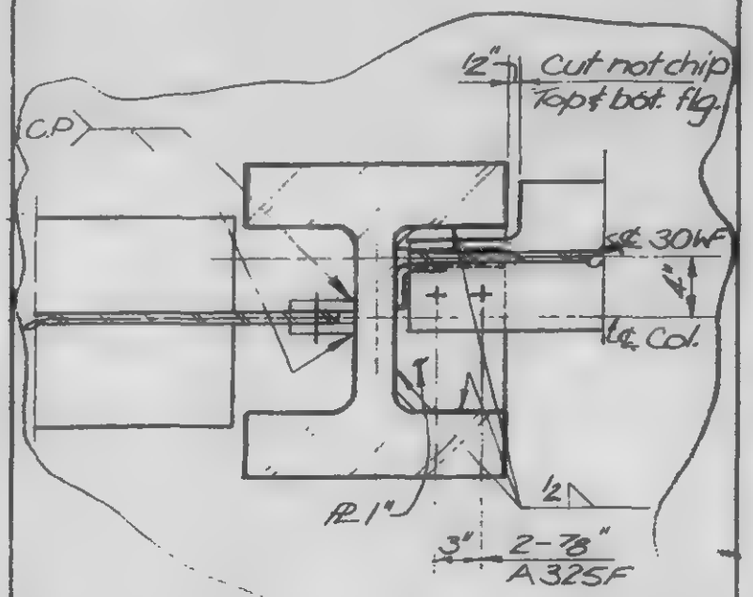

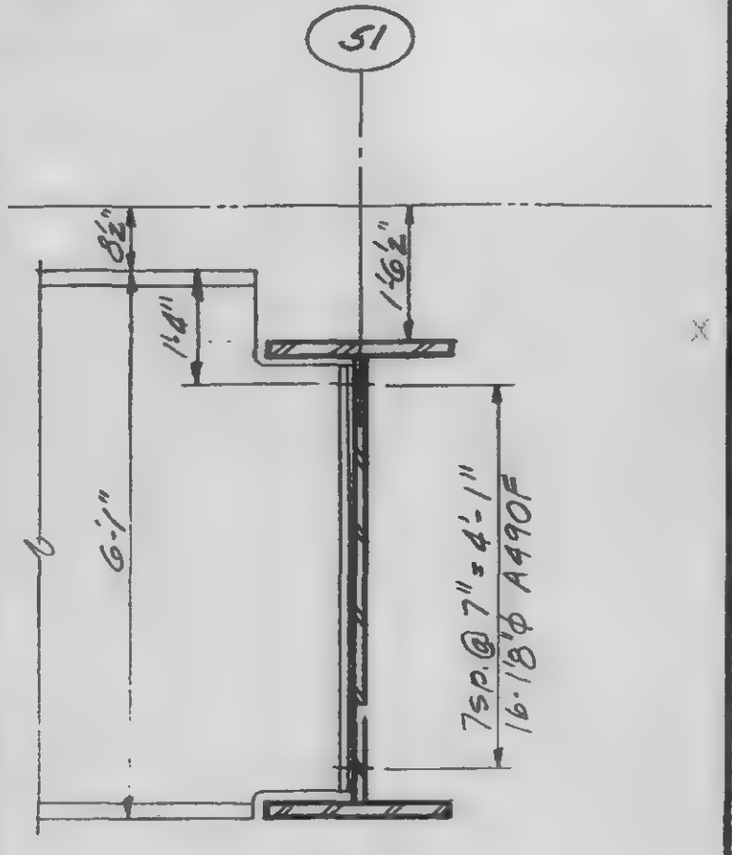

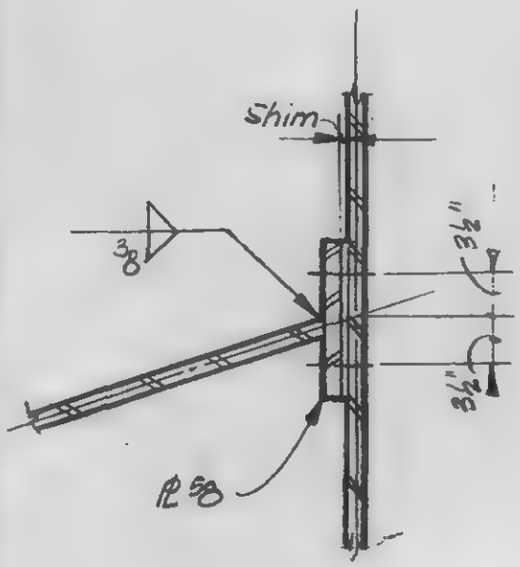

C

LICENSED PROFESSIONAL ENGINEER
LESLIE E. ROBERTSON
No. 34360
UNIVERSITY OF THE STATE OF NEW YORK

DESIGNED: K. Chiang

DRAWN:

REVIEWED:

13-K3.3-12

SKILLING, HELLE, CHRISTIANSEN, ROBERTSON — Structural & Civil Engineers

PROJECT: THE WORLD TRADE CENTER

TITLE: GIRDER CONNECTION DETAILS

DATE: 11-3-72

REVISIONS

Released for construction 11-20-72

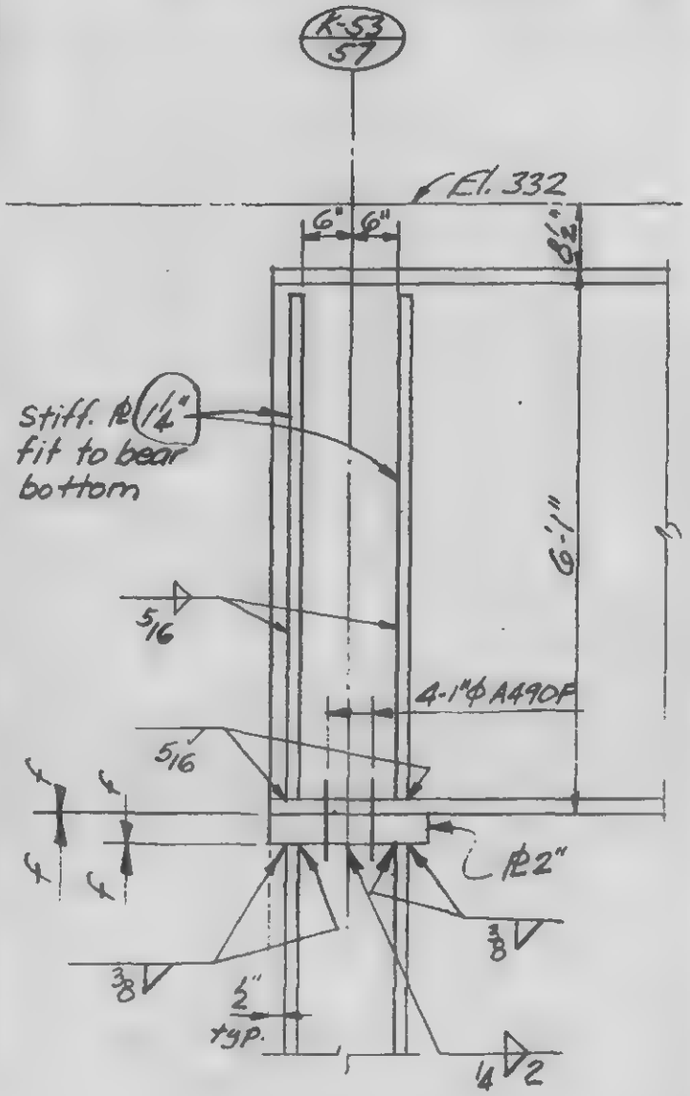

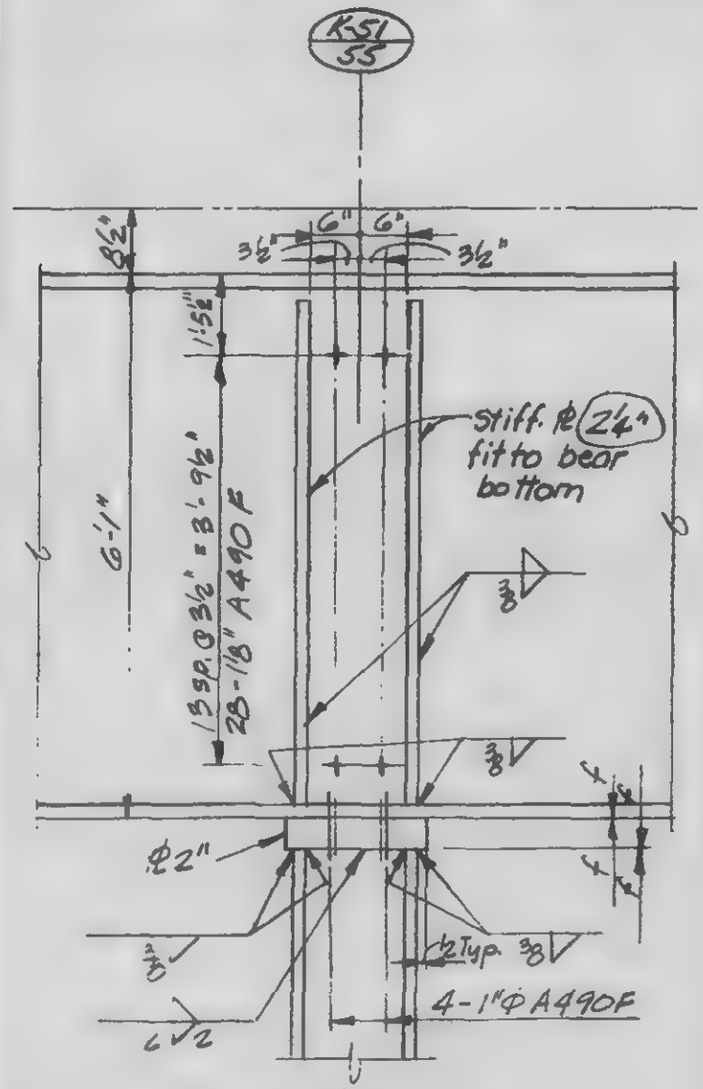

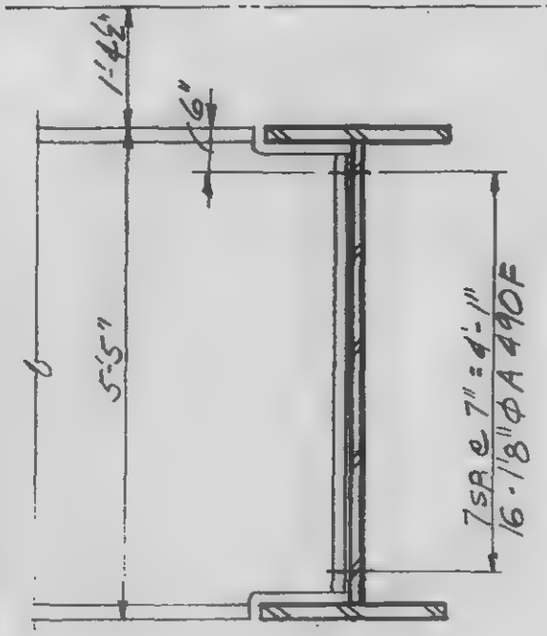

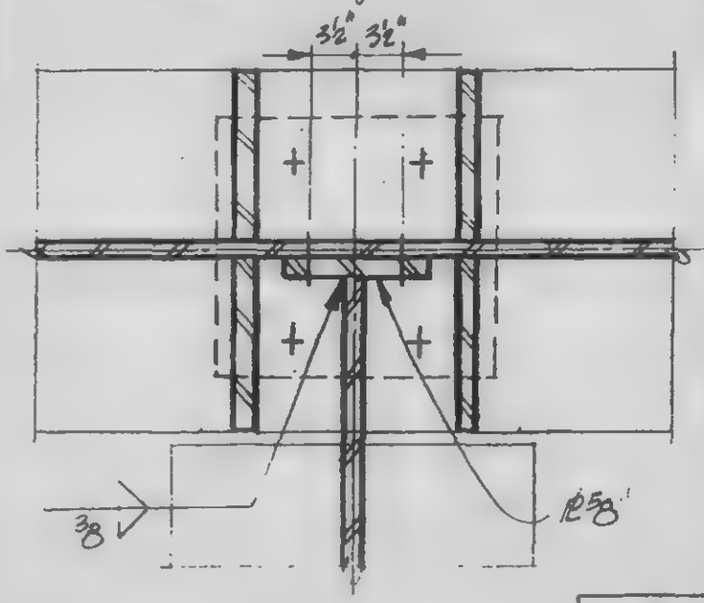

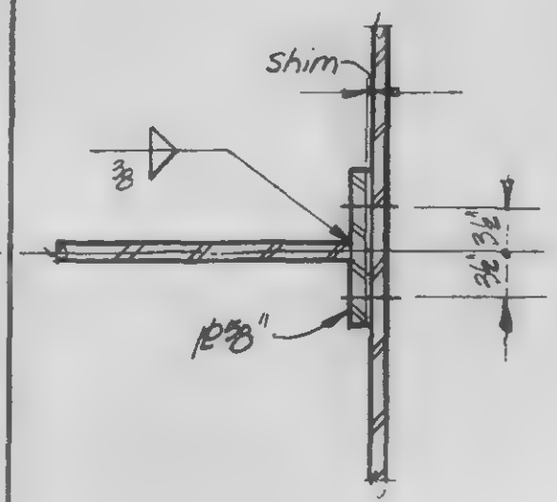

LICENSED PROFESSIONAL ENGINEER — LESLIE E. ROBERTSON — No 34960 — UNIVERSITY OF THE STATE OF NEW YORK

DESIGNED

DRAWN

REVIEWED

A | B | C

B-K3.3-13

SKILLING, HELLE, CHRISTIANSEN, ROBERTSON — Structural & Civil Engineers

PROJECT: THE WORLD TRADE CENTER

TITLE: GIRDER CONNECTION DETAILS

DATE: 12-3-72

REVISIONS

- Released for construction 11-20-72
- 2-5-73
- 6-4-73

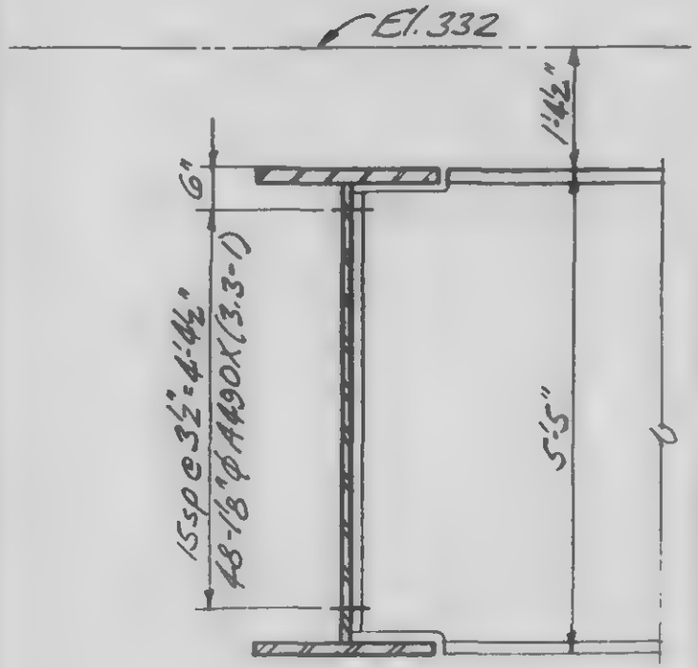

A

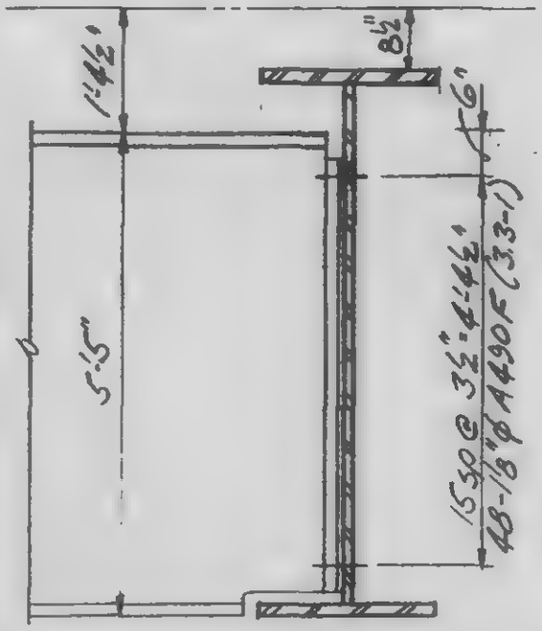

B

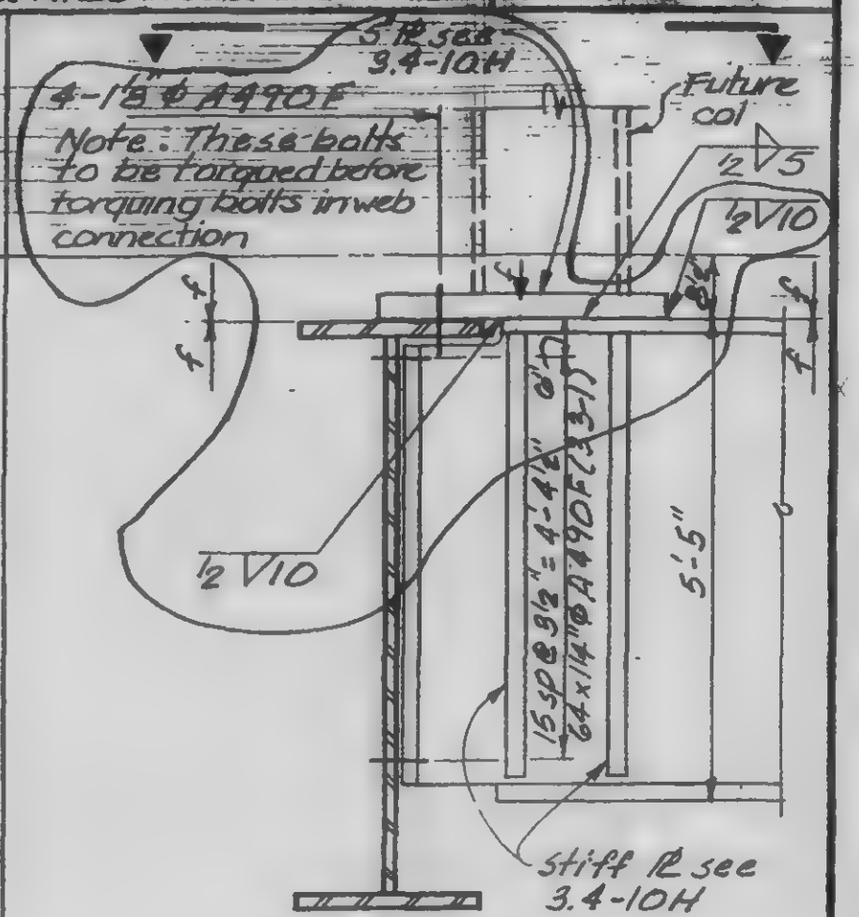

C

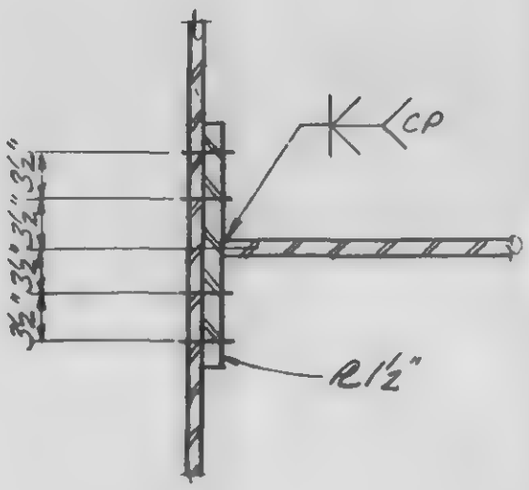

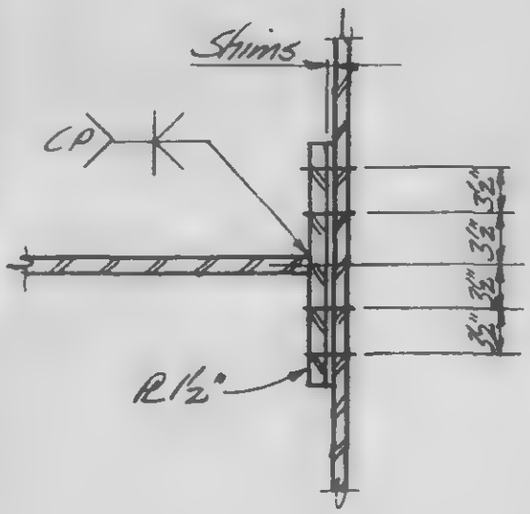

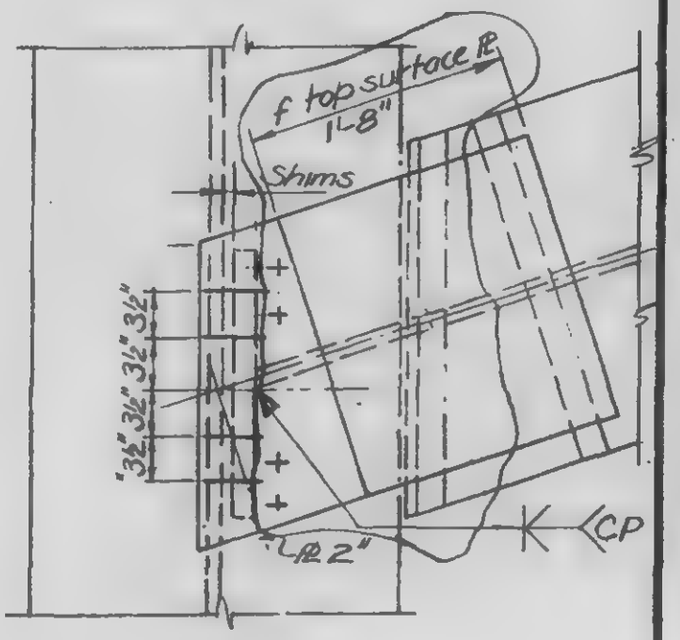

LICENSED PROFESSIONAL ENGINEER — LESLIE E. ROBERTSON — No. 24360 — UNIVERSITY OF THE STATE OF NEW YORK

DESIGNED

DRAWN

REVIEWED

13-K 3.3-14

SKILLING, HELLE, CHRISTIANSEN, ROBERTSON — Structural & Civil Engineers

PROJECT: THE WORLD TRADE CENTER

TITLE: GIRDER CONNECTION DETAILS

DATE: 11-3-72

REVISIONS

Released for construction 11-20-72

2-5-73

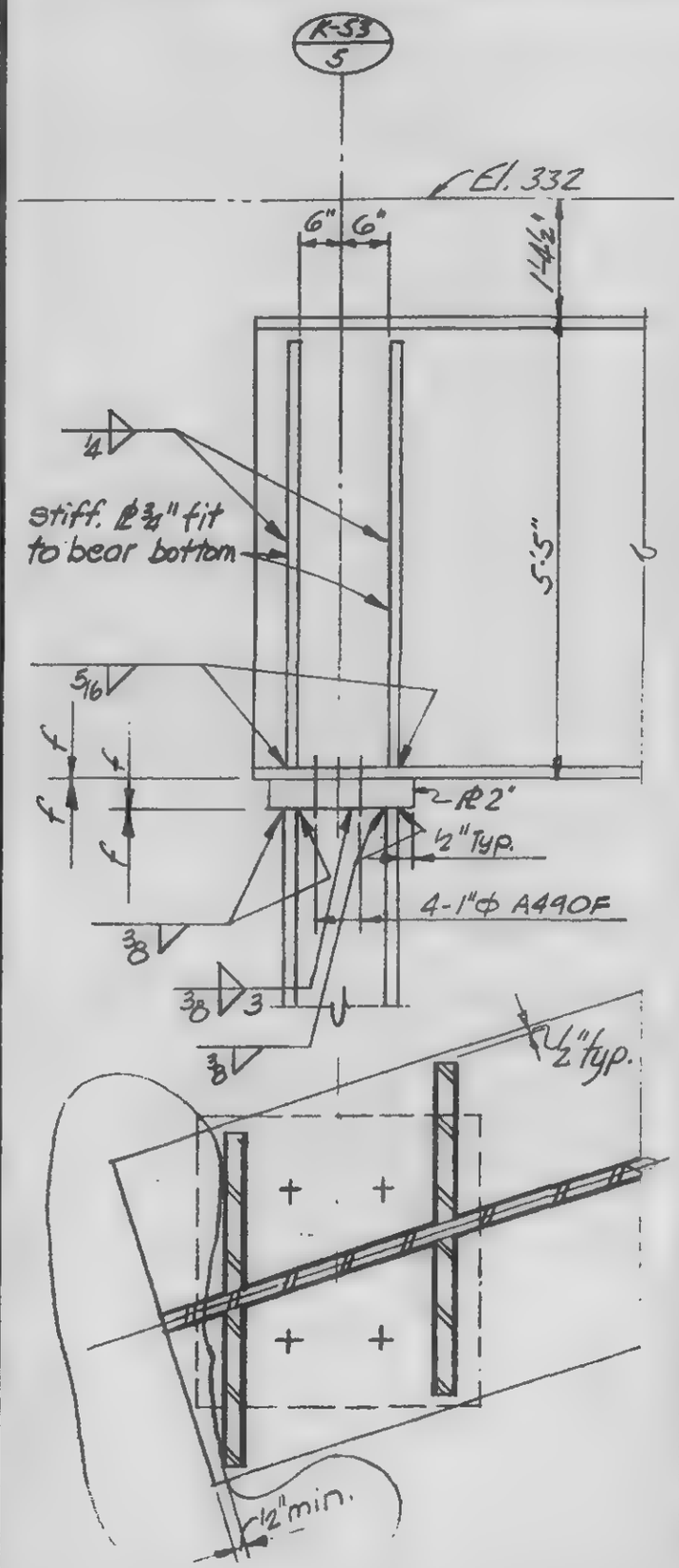

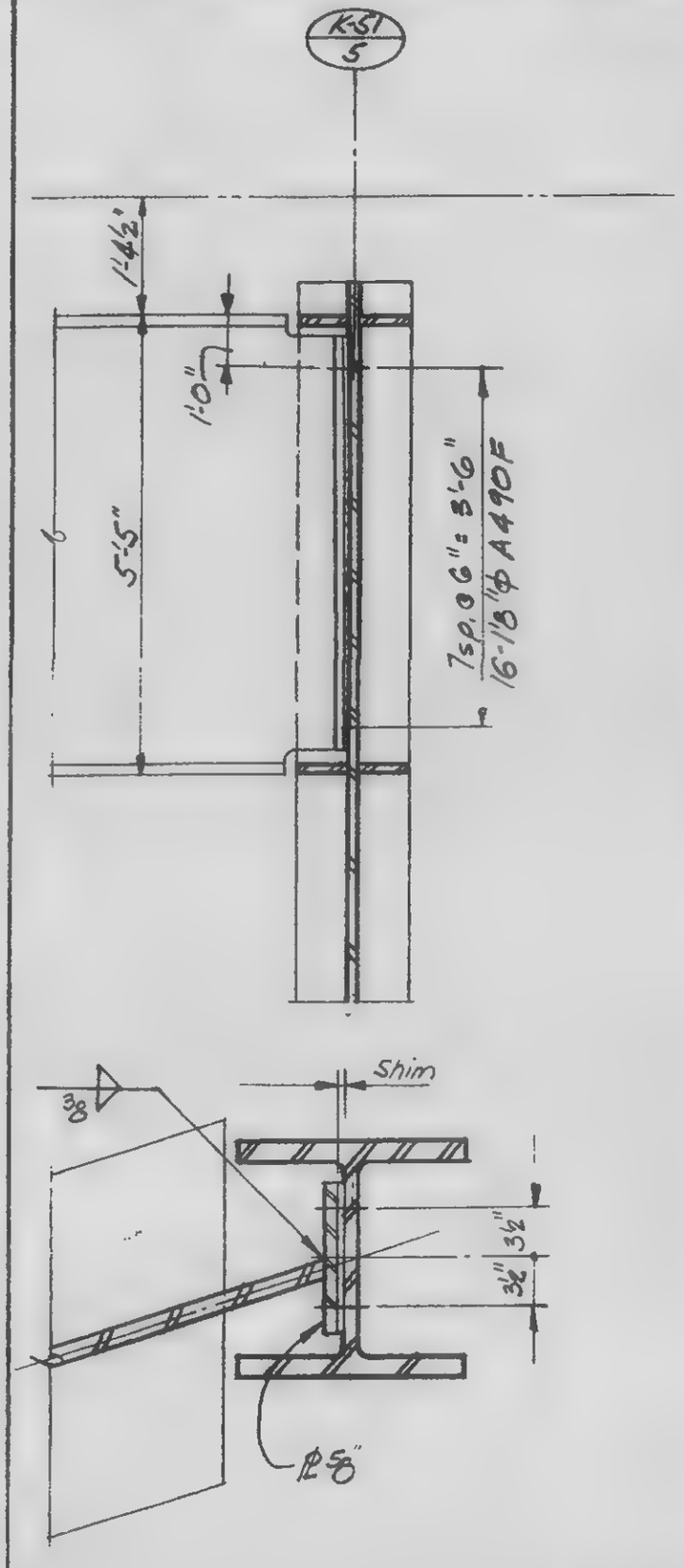

A

B

13-K3.3-15

LICENSED PROFESSIONAL ENGINEER
LESLIE E. ROBERTSON
No 34360
UNIVERSITY OF THE STATE OF NEW YORK

DESIGNED

DRAWN

REVIEWED

SKILLING, HELLE, CHRISTIANSEN, ROBERTSON — Structural & Civil Engineers

PROJECT: THE WORLD TRADE CENTER

TITLE: GIRDER CONNECTION DETAILS

DATE: 11-3-72

REVISIONS

Released for construction 11-20-72

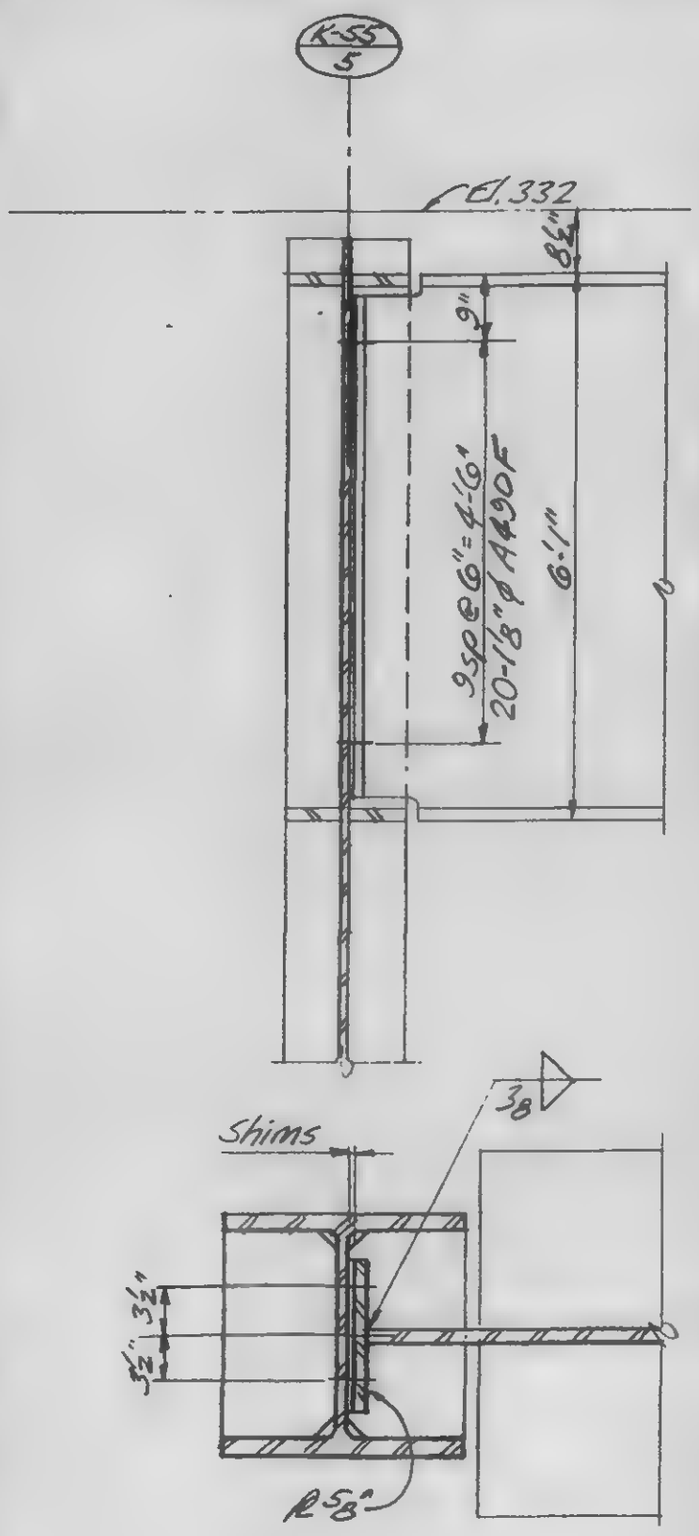

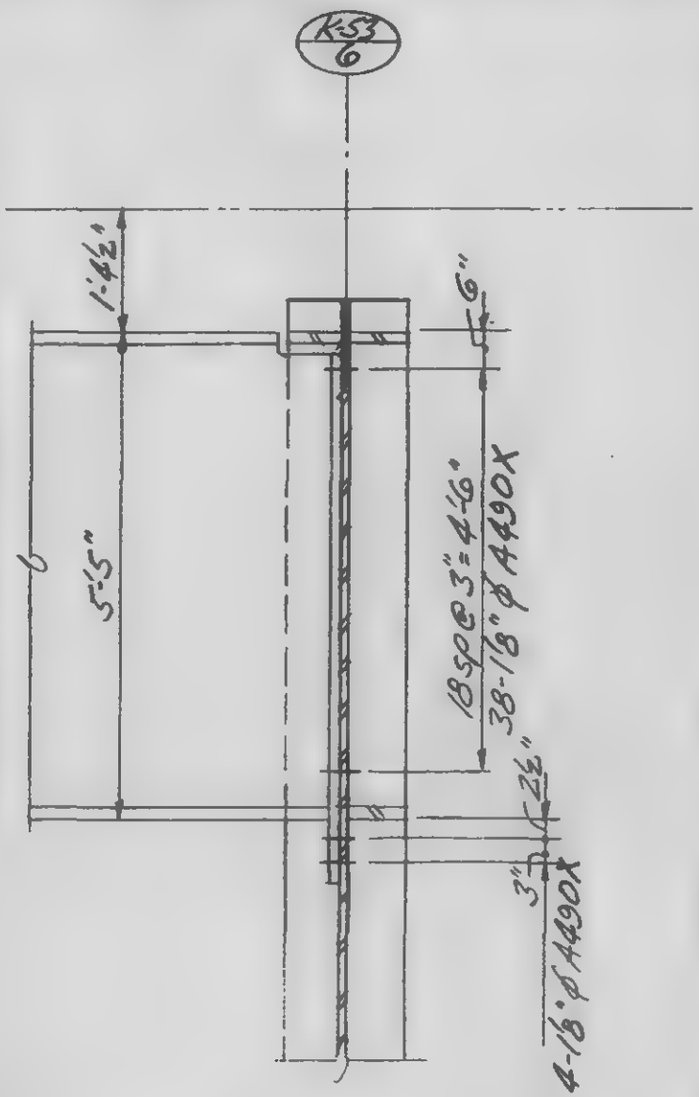

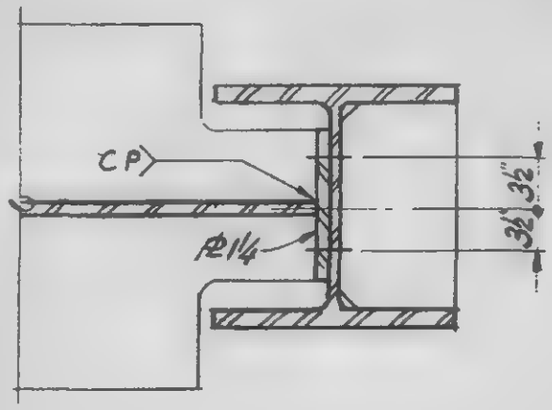

A

B

13-K3.3-16

LICENSED PROFESSIONAL ENGINEER
LESLIE E. ROBERTSON
No 34360
UNIVERSITY OF THE STATE OF NEW YORK

DRAWN

REVIEWED

SKILLING, HELLE, CHRISTIANSEN, ROBERTSON — Structural & Civil Engineers

PROJECT: THE WORLD TRADE CENTER

TITLE: GIRDER CONNECTION DETAILS

DATE: 11-3-72

REVISIONS

Released for construction 11-20-72

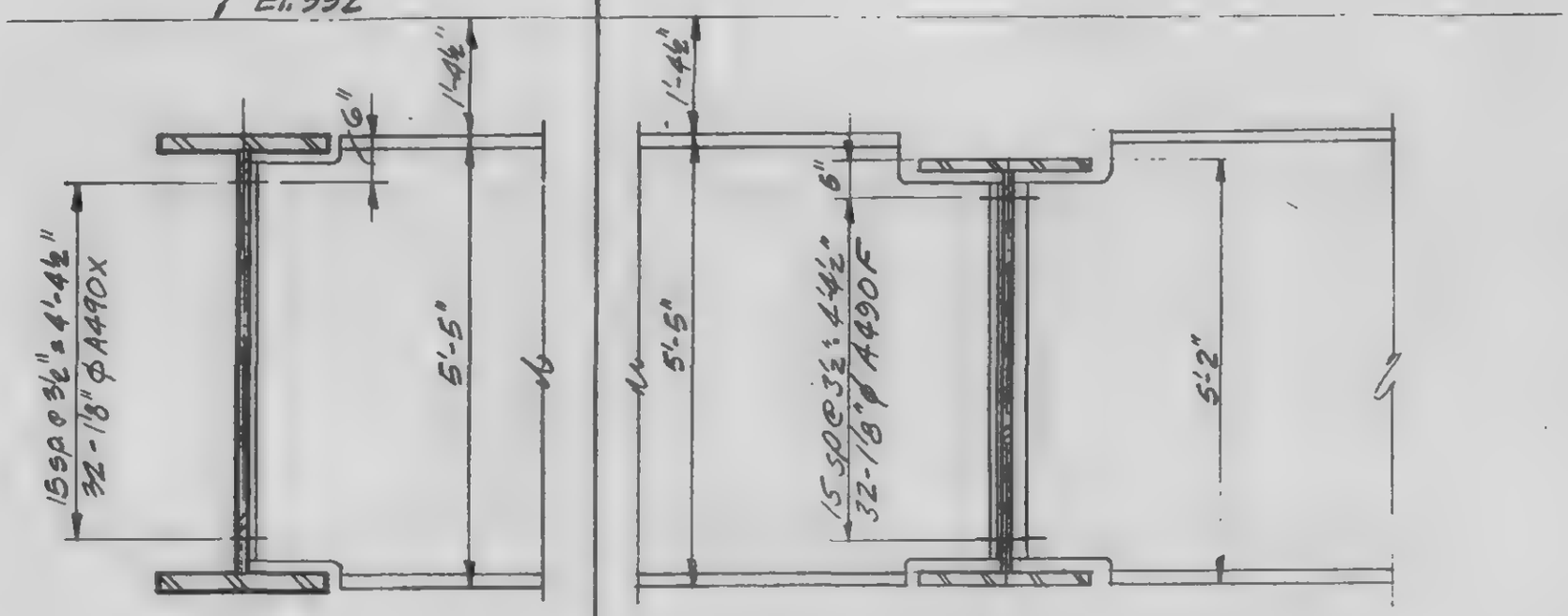

For cont.
See 3.4-12A

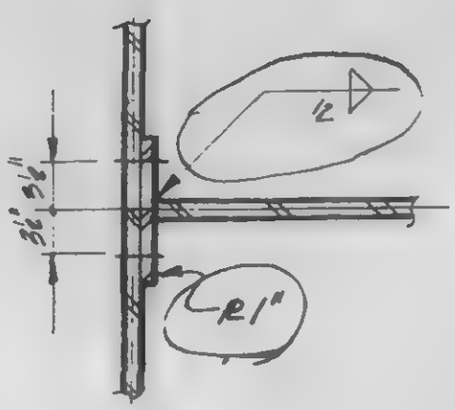

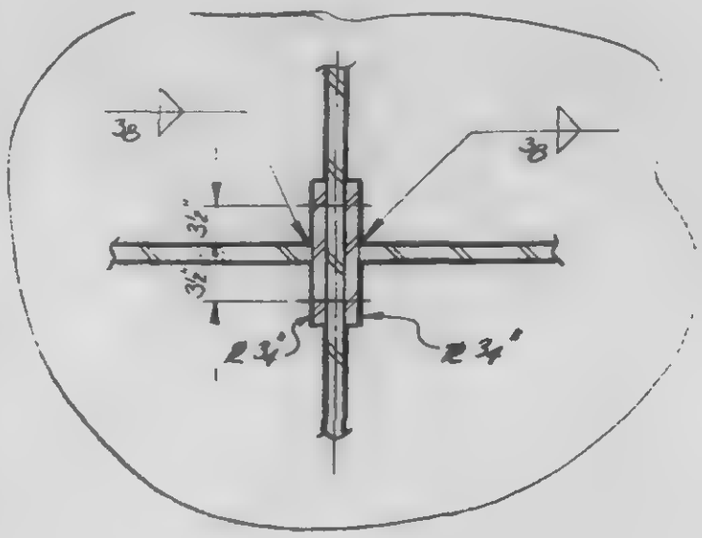

LICENSED PROFESSIONAL ENGINEER — LESLIE E. ROBERTSON — No. 24290 — UNIVERSITY OF THE STATE OF NEW YORK

DESIGNED

DRAWN

REVIEWED

A | B

13-K3.3-17

SKILLING, HELLE, CHRISTIANSEN, ROBERTSON — Structural & Civil Engineers

PROJECT: THE WORLD TRADE CENTER

TITLE: GIRDER DETAILS AT FUTURE COLUMNS

DATE: 11-3-72

REVISIONS

General Rev.
RELEASED FOR CONSTRUCTION
11-24-72

2-5-73

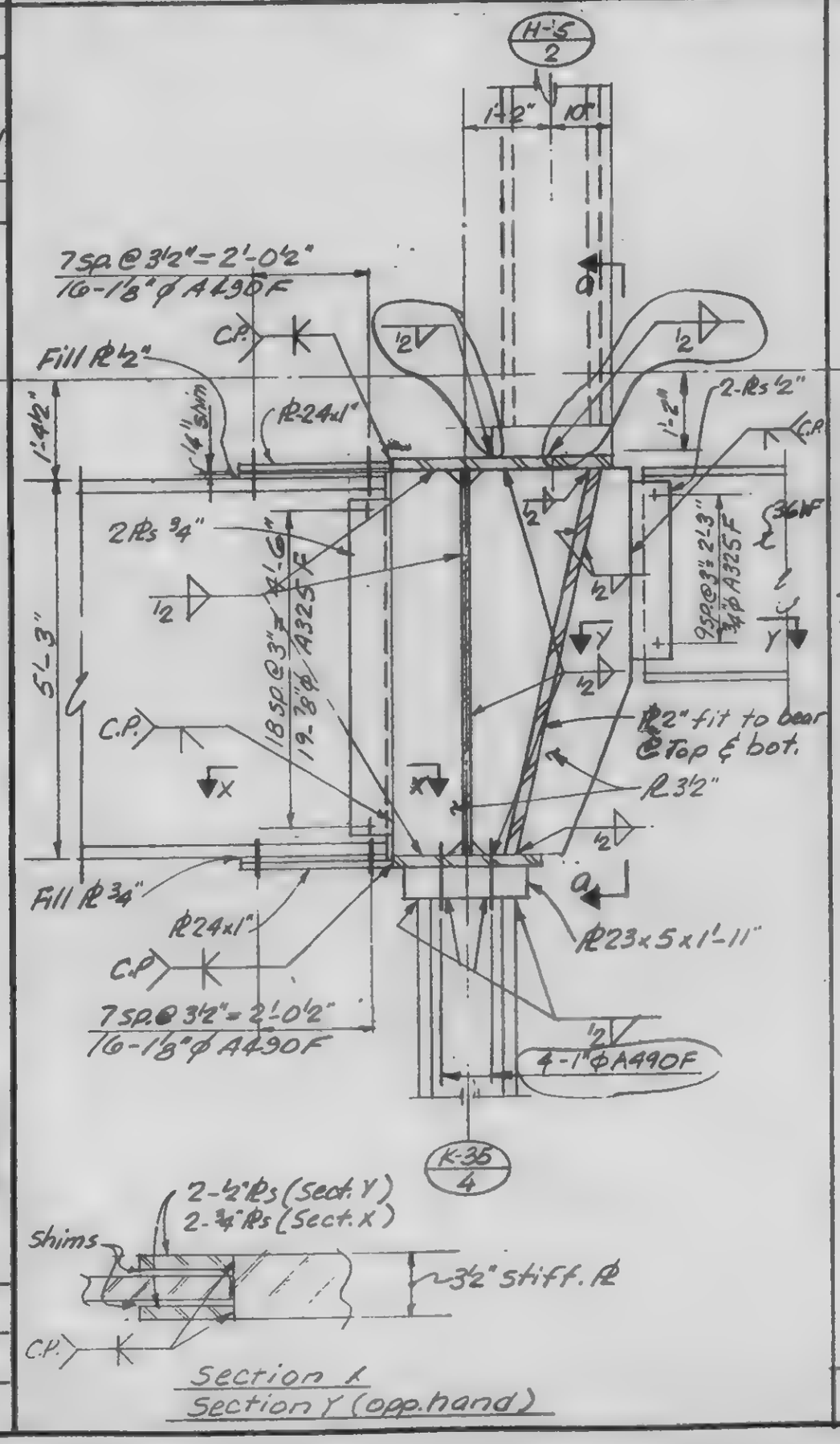

LICENSED PROFESSIONAL ENGINEER — LESLIE E. ROBERTSON — No 34300 — UNIVERSITY OF THE STATE OF NEW YORK

DESIGNED

DRAWN
FH:CB

REVIEWED

a

.3-K3.4-1

SKILLING, HELLE, CHRISTIANSEN, ROBERTSON — Structural & Civil Engineers

PROJECT: THE WORLD TRADE CENTER

TITLE: GIRDER DETAILS AT FUTURE COLUMNS

DATE: 11-3-72

REVISIONS

- General Revision Released for construction 11-24-72
- 2-5-73

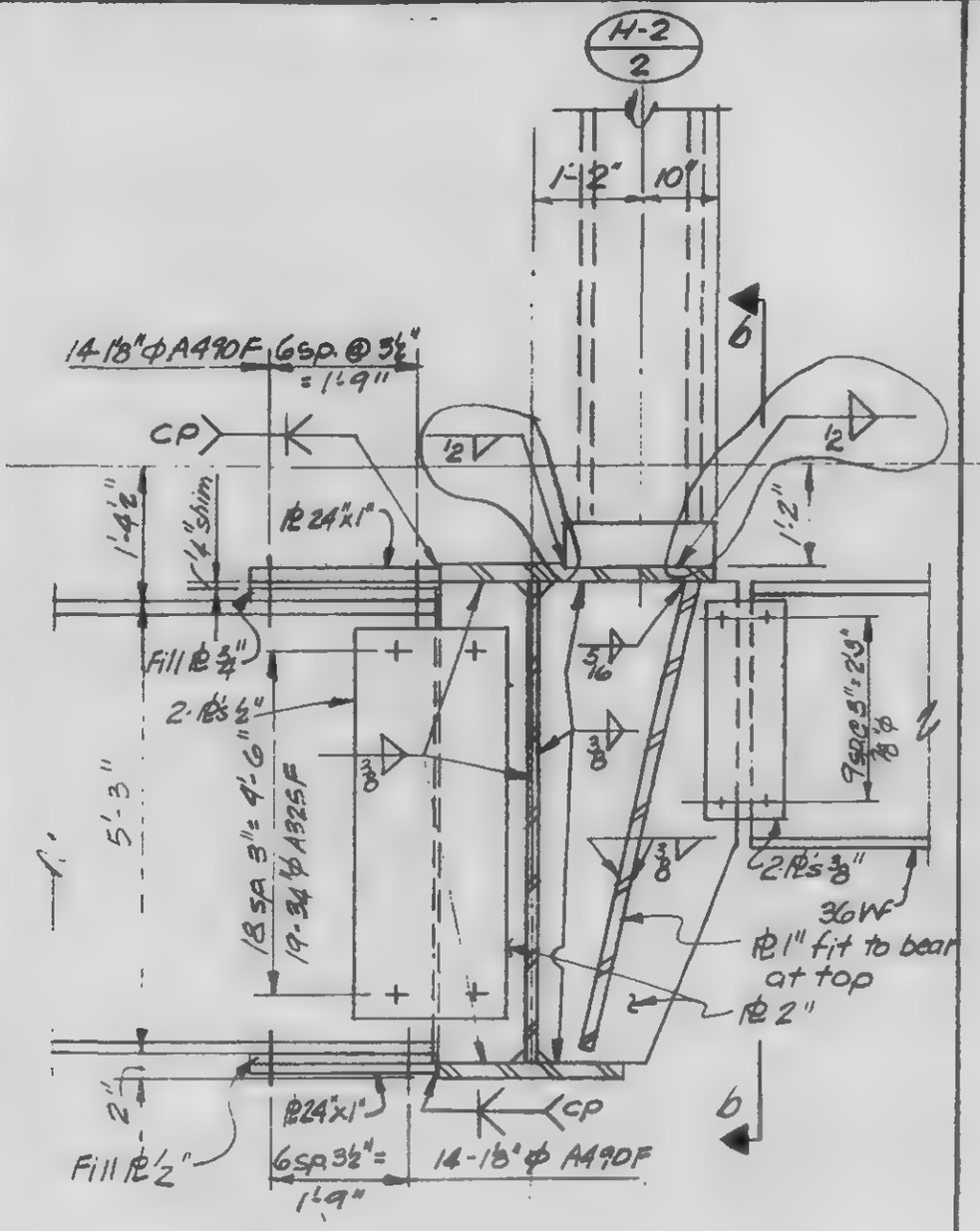

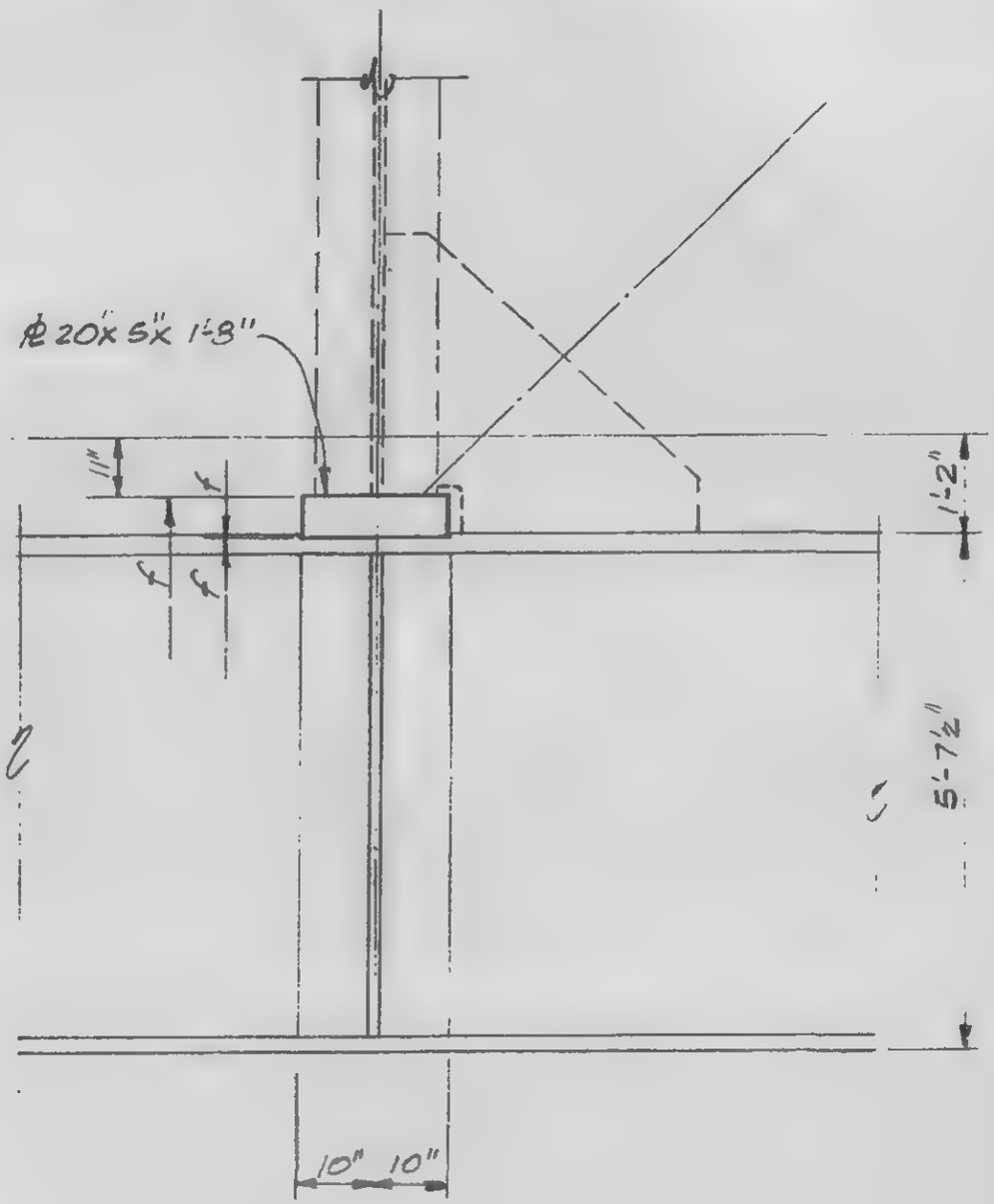

LICENSED PROFESSIONAL ENGINEER — LESLIE E. ROBERTSON — No. 34360 — UNIVERSITY OF THE STATE OF NEW YORK

DESIGNED

DRAWN

REVIEWED

b

13-K 3.4-2

SKILLING, HELLE, CHRISTIANSEN, ROBERTSON — Structural & Civil Engineers

PROJECT: THE WORLD TRADE CENTER

TITLE: GIRDER DETAILS AT FUTURE COLUMNS

DATE: 11-3-72

REVISIONS

- GENERAL REVISION RELEASED FOR CONSTRUCTION 11-24-72
- 12-11-72
- 2-5-73

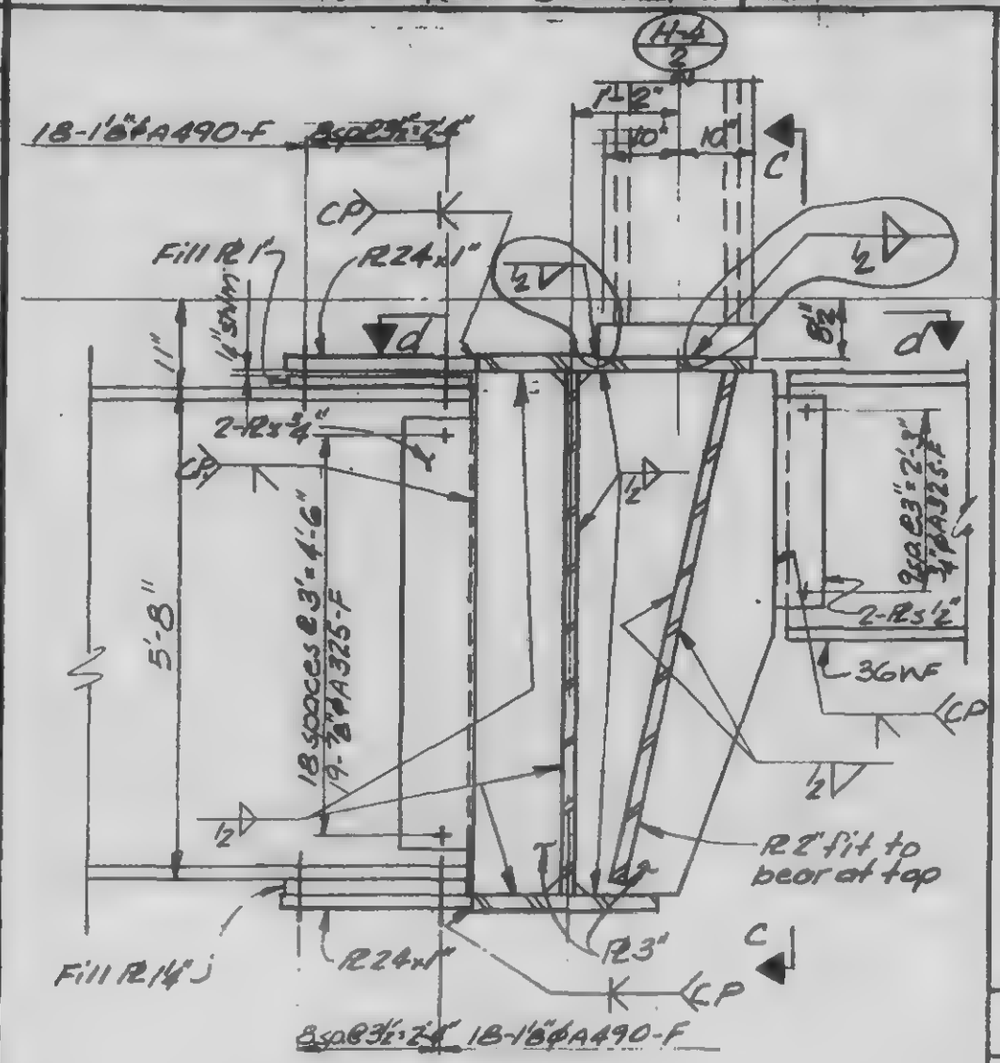

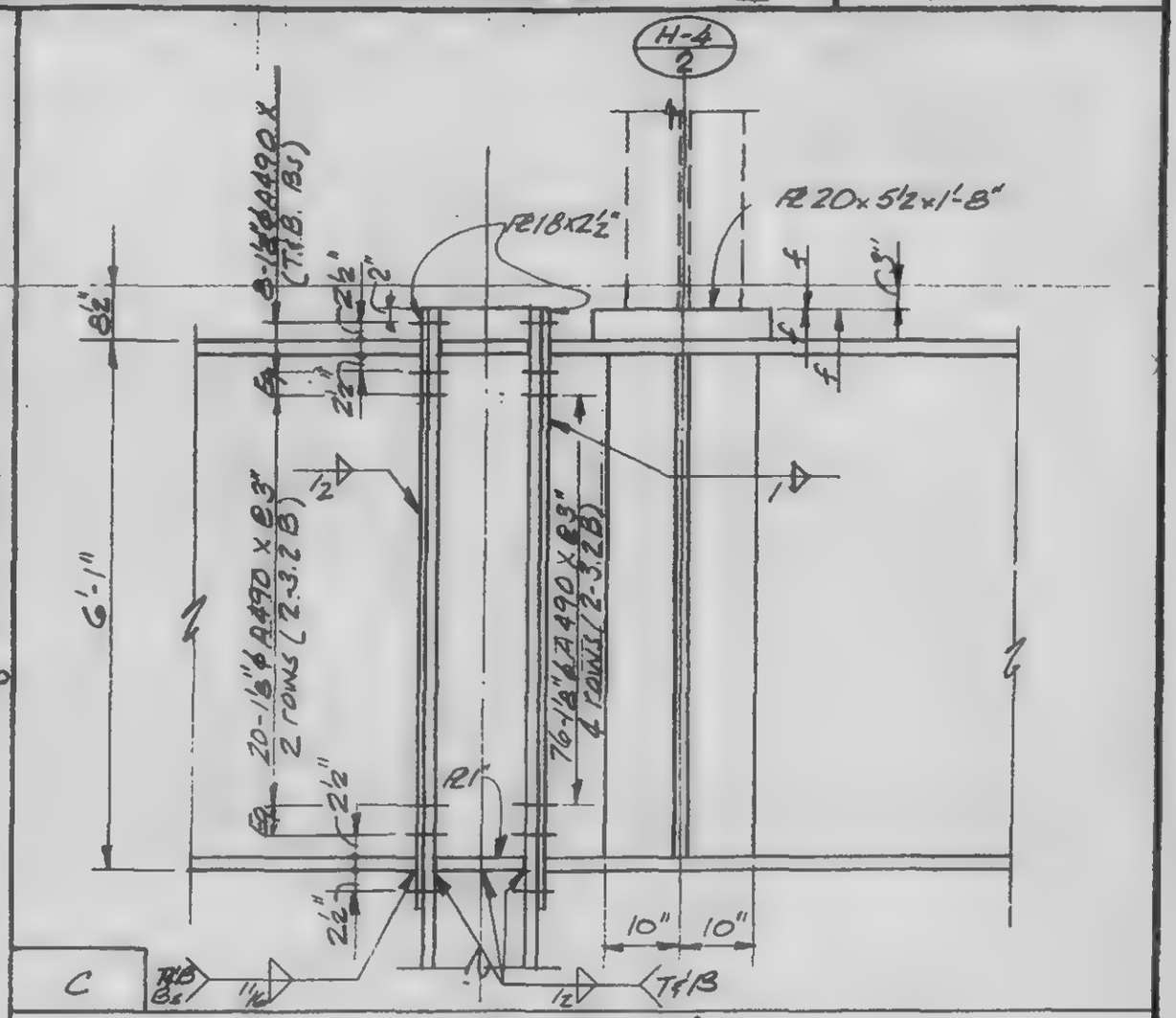

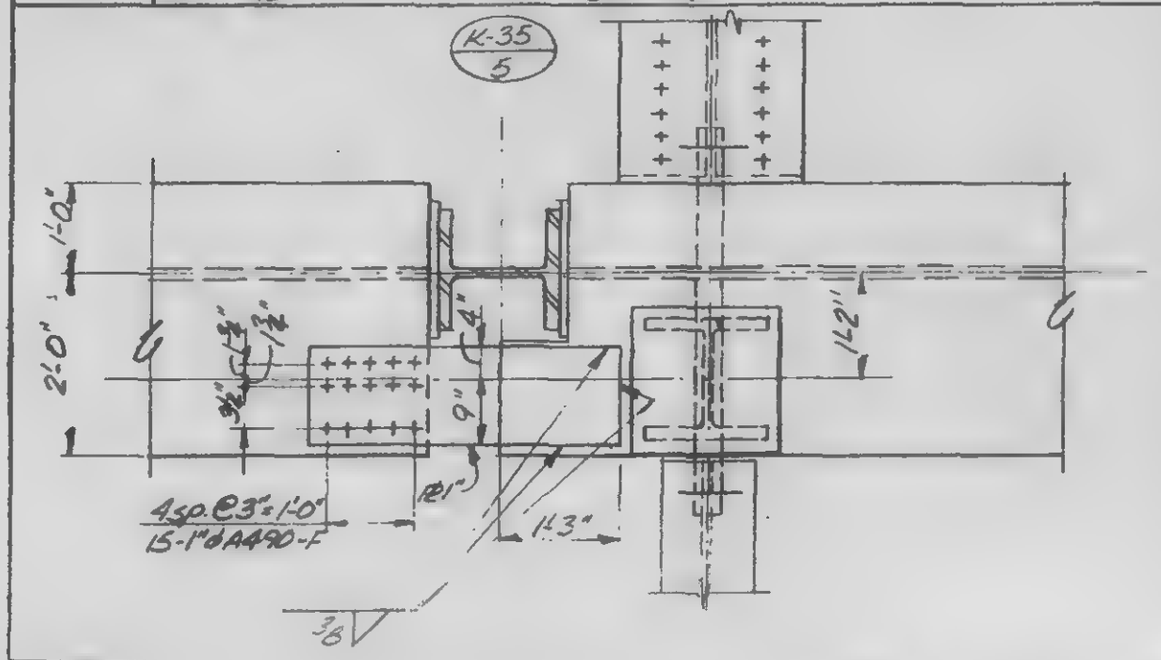

LICENSED PROFESSIONAL ENGINEER — LESLIE E. ROBERTSON — No. 34360 — UNIVERSITY OF THE STATE OF NEW YORK

DESIGNED

DRAWN

REVIEWED

d

13-K3.4-3

SKILLING, HELLE, CHRISTIANSEN, ROBERTSON — Structural & Civil Engineers

PROJECT: THE WORLD TRADE CENTER

TITLE: GIRDER DETAILS AT FUTURE COLUMNS

DATE: 11-3-72

REVISIONS

General Revision Released for Construction 11-24-72

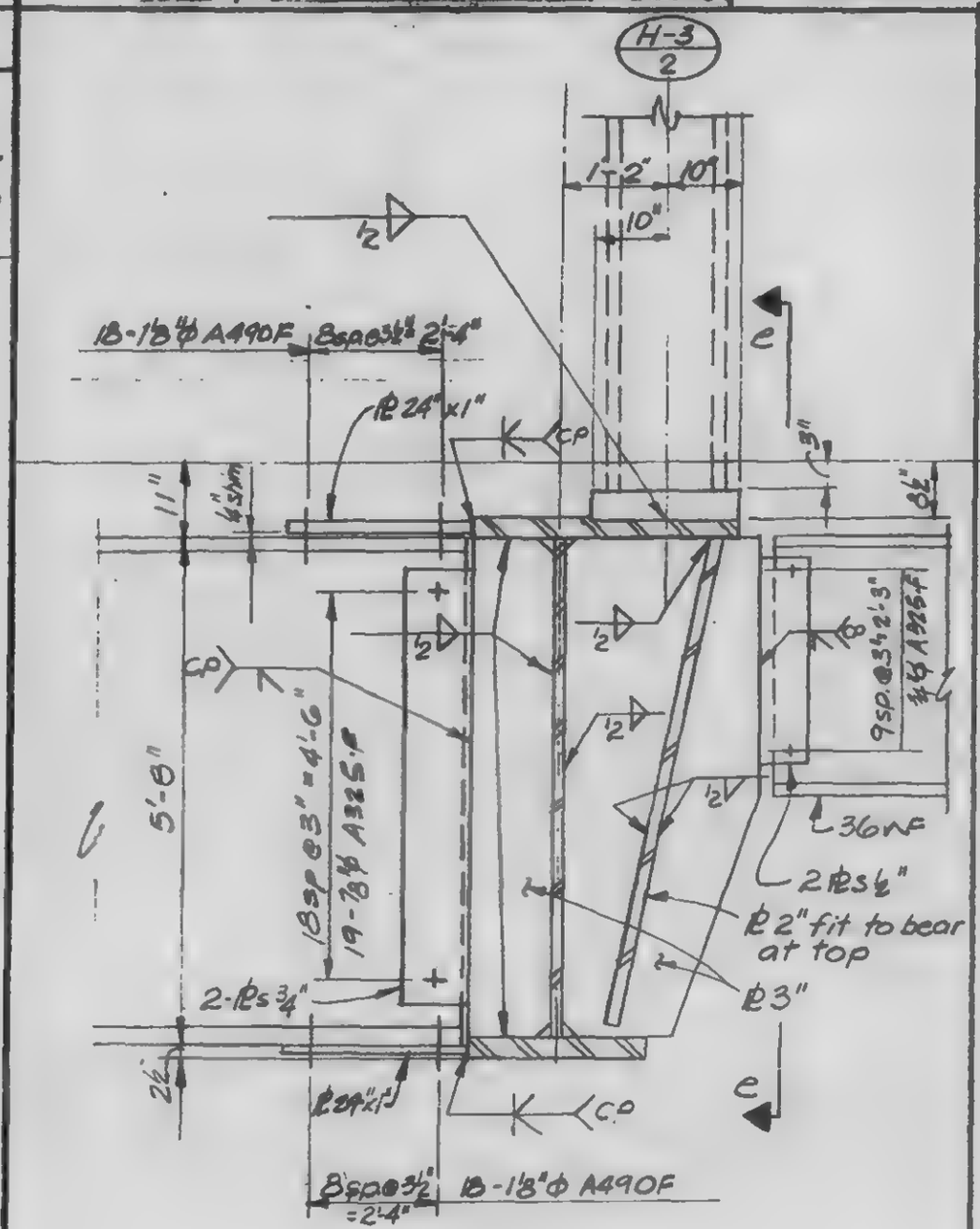

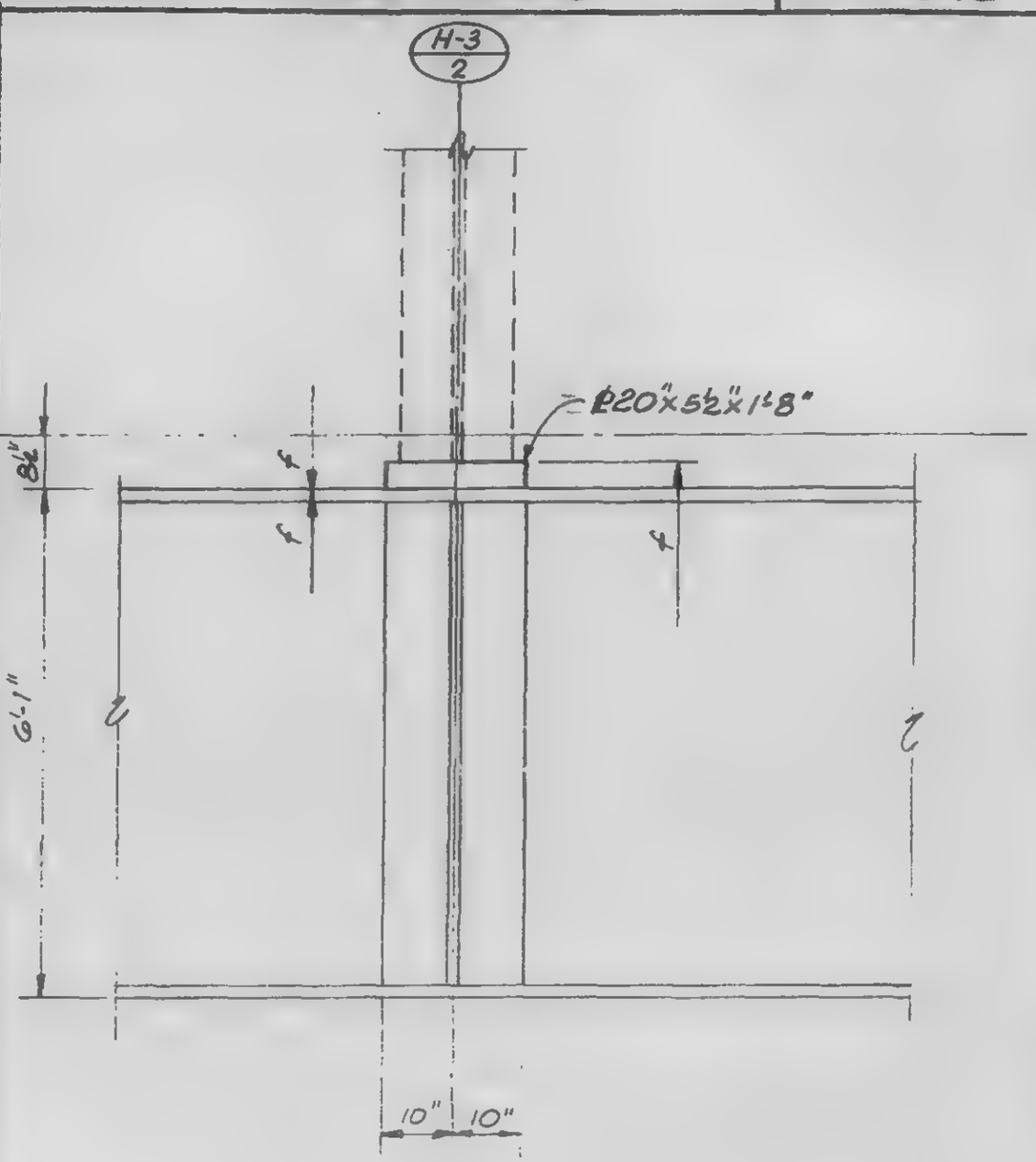

LICENSED PROFESSIONAL ENGINEER
LESLIE E. ROBERTSON
No. 34360
UNIVERSITY OF THE STATE OF NEW YORK

DESIGNED

DRAWN

REVIEWED

e

3-K 3.4-4

SKILLING, HELLE, CHRISTIANSEN, ROBERTSON — Structural & Civil Engineers

PROJECT: THE WORLD TRADE CENTER | TITLE: GIRDER DETAILS AT FUTURE COLUMNS | DATE: 11-[illegible]-72

REVISIONS

RELEASED FOR CONSTRUCTION 11-24-72

12-11-72

2-5-73

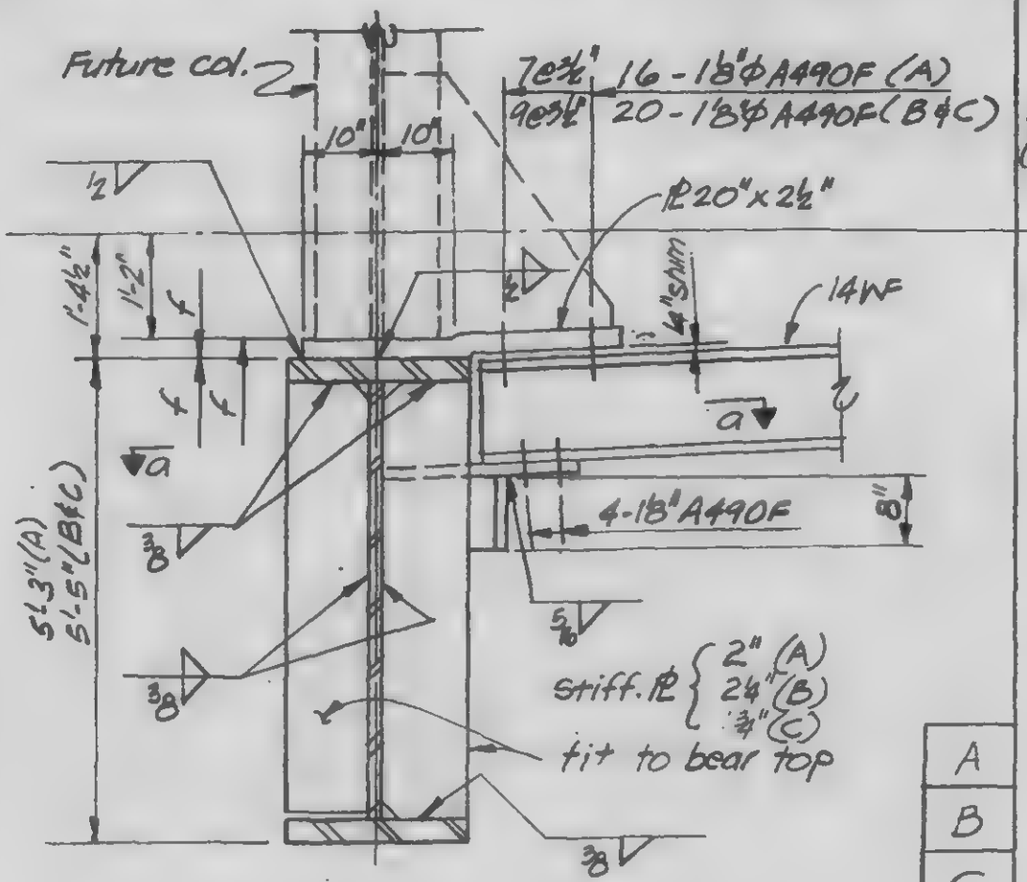

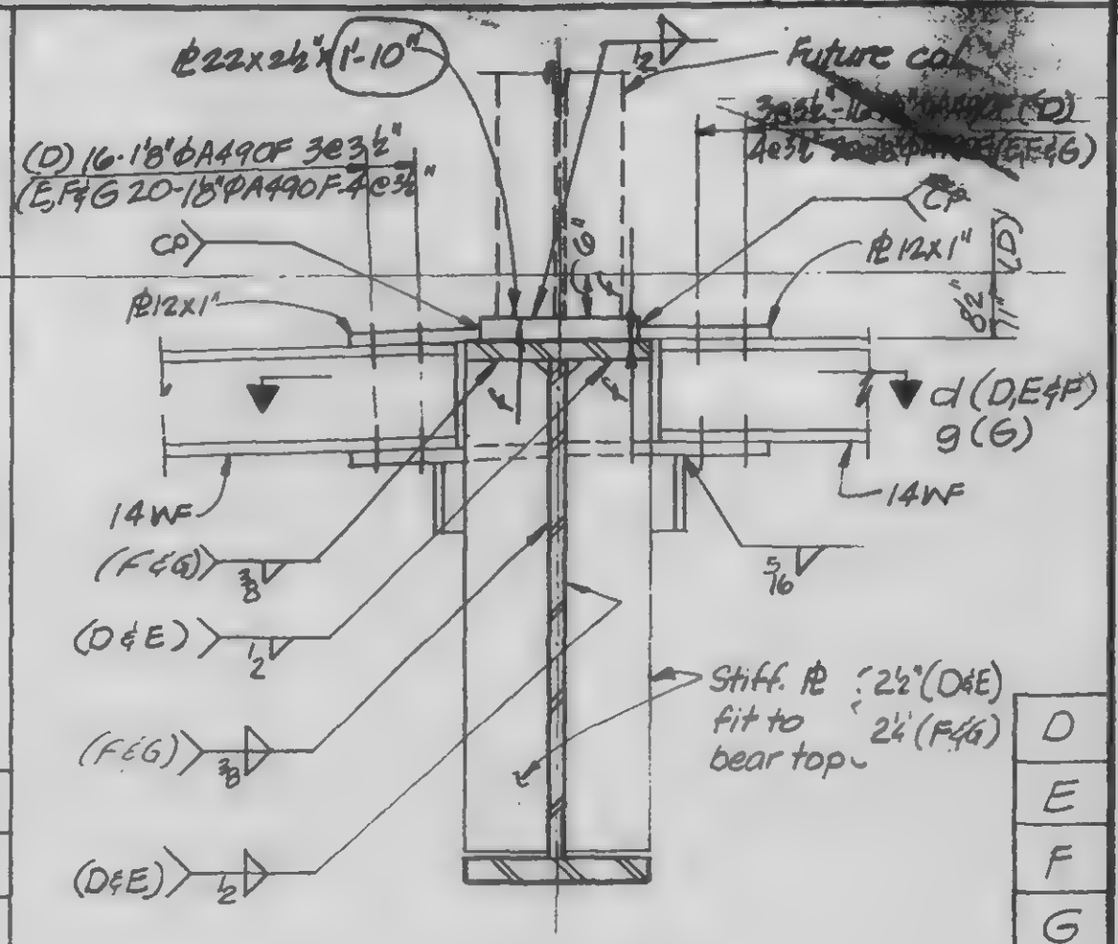

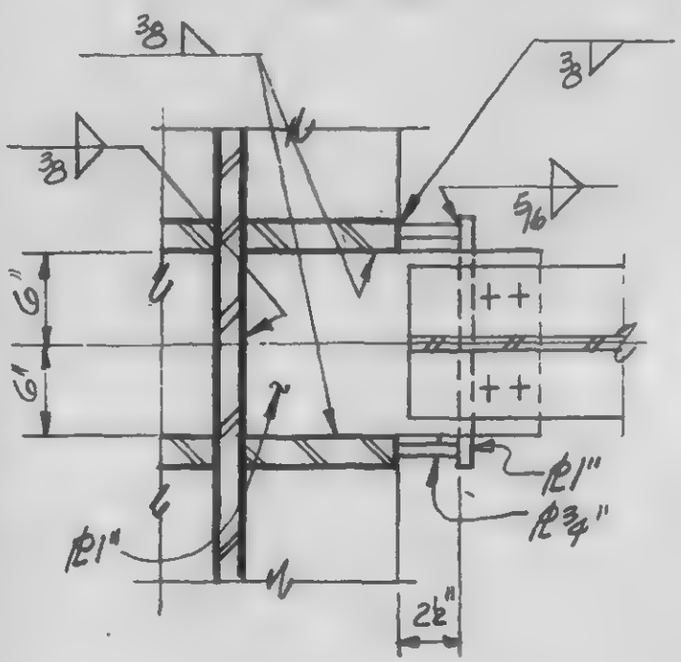

a

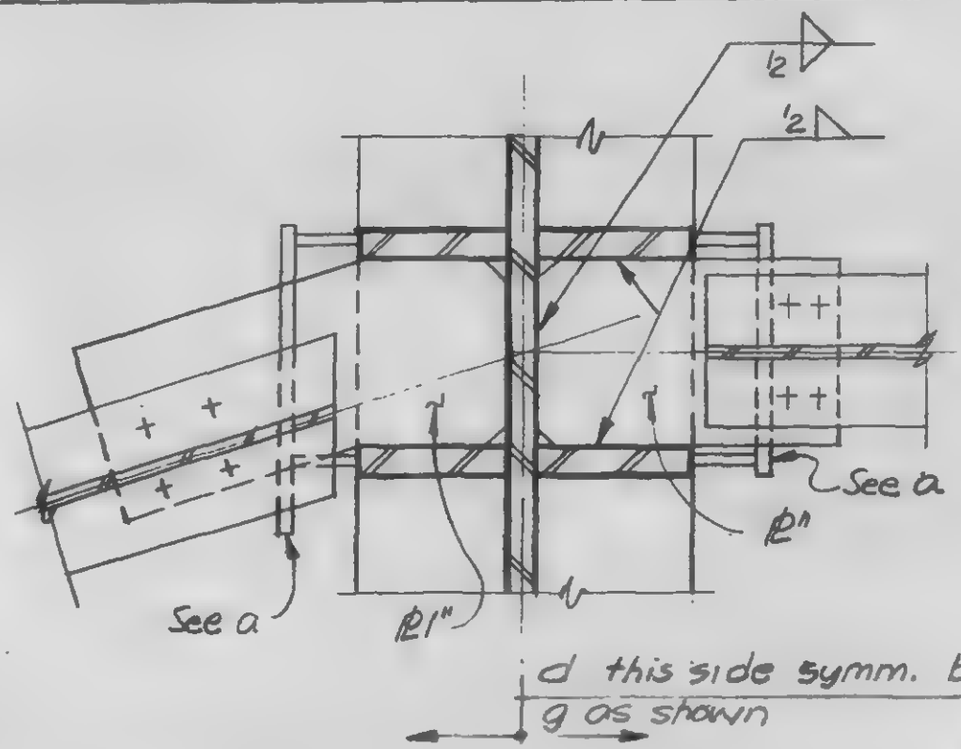

d
g

13-K3.4-5.1

LICENSED PROFESSIONAL ENGINEER LESLIE E. ROBERTSON No. 34360 UNIVERSITY OF THE STATE OF NEW YORK

DESIGNED

DRAWN

REVIEWED

SKILLING, HELLE, CHRISTIANSEN, ROBERTSON — Structural & Civil Engineers

PROJECT THE WORLD TRADE CENTER

TITLE GIRDER DETAILS AT FUTURE COLUMNS

DATE 11-24-72

REVISIONS

RELEASED FOR CONSTRUCTION 11-24-72

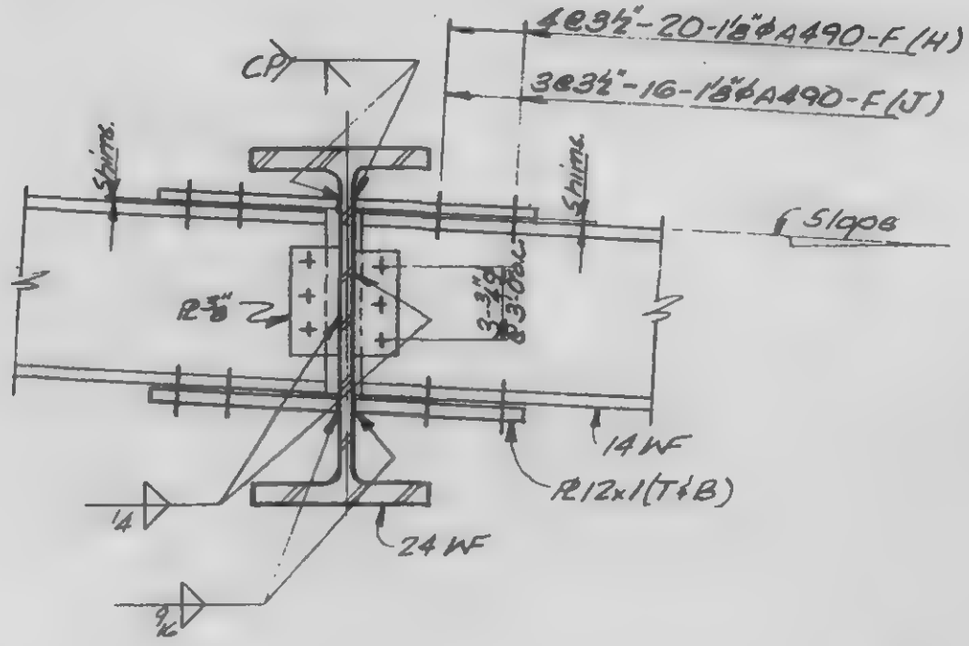

H

J

LICENSED PROFESSIONAL ENGINEER — LESLIE E. ROBERTSON — No 34360 — UNIVERSITY OF THE STATE OF NEW YORK

T.R

REVIEWED

13-K3.4-5.2.

SKILLING, HELLE, CHRISTIANSEN, ROBERTSON — Structural & Civil Engineers

PROJECT: THE WORLD TRADE CENTER | TITLE: GIRDER DETAILS AT FUTURE COLS. | DATE: 11-3-72

REVISIONS

RELEASED FOR CONSTRUCTION 11-24-72

2-5-73

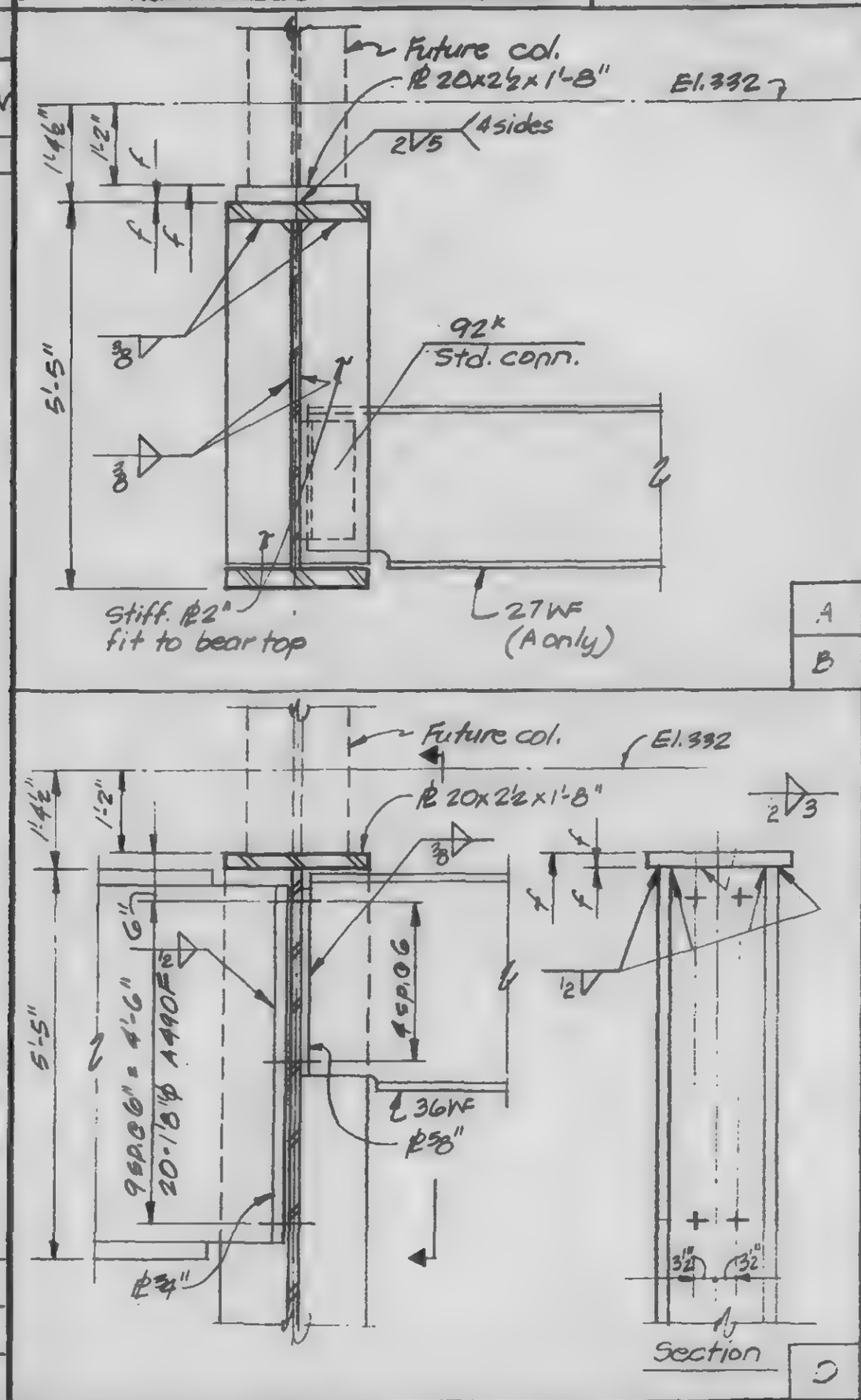

LICENSED PROFESSIONAL ENGINEER — LESLIE E. ROBERTSON — No. 34360 — UNIVERSITY OF THE STATE OF NEW YORK

DESIGNED

DRAWN

REVIEWED

15-K3.4-6

SKILLING; HELLE, CHRISTIANSEN, ROBERTSON — Structural & Civil Engineers

PROJECT: THE WORLD TRADE CENTER | TITLE: GIRDER DETAILS AT FUTURE COLS. | DATE: 11-3-72

REVISIONS

RELEASED FOR CONSTRUCTION 11-24-72

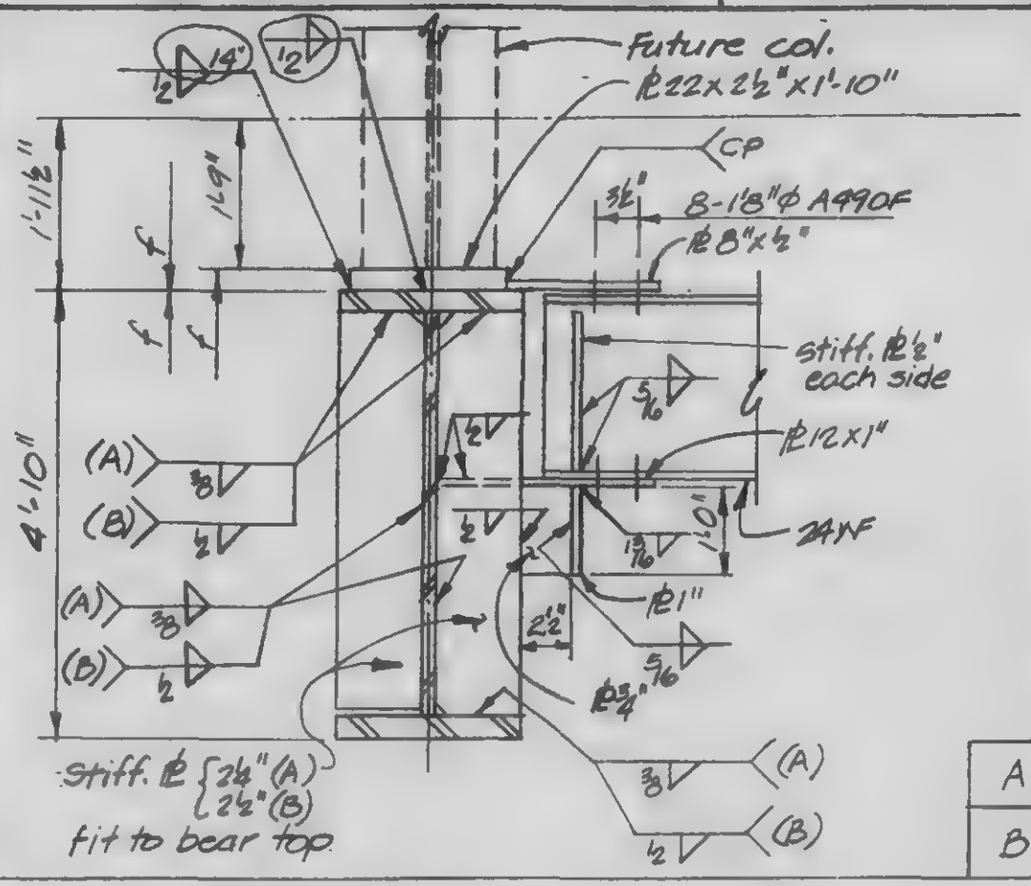

A

B

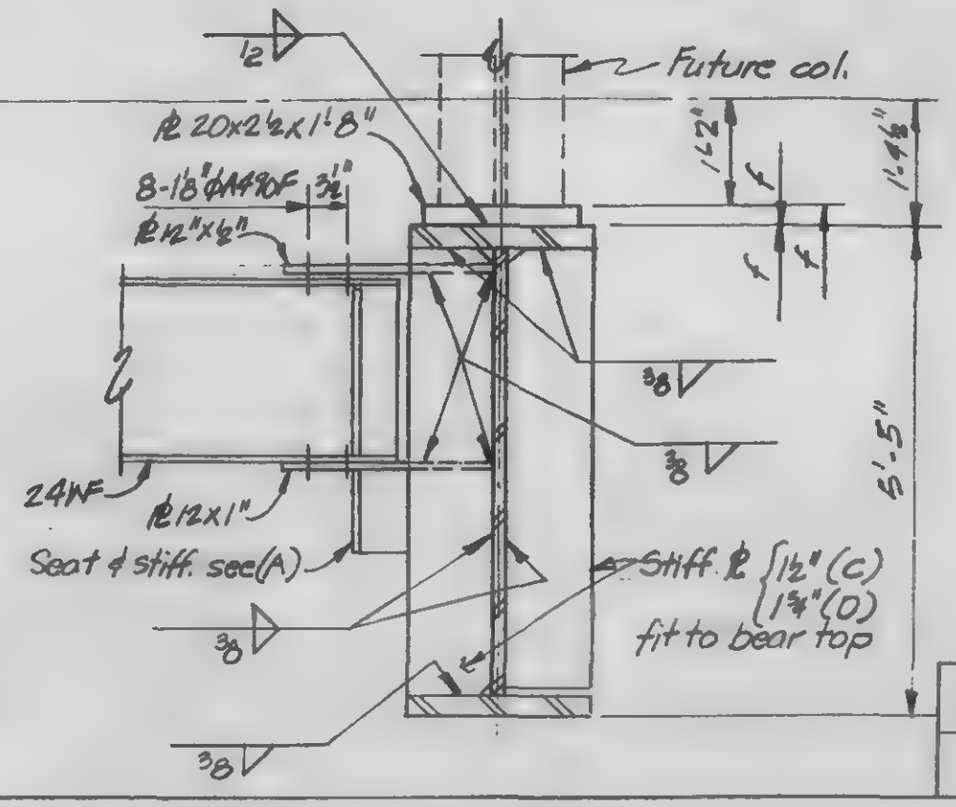

C

D

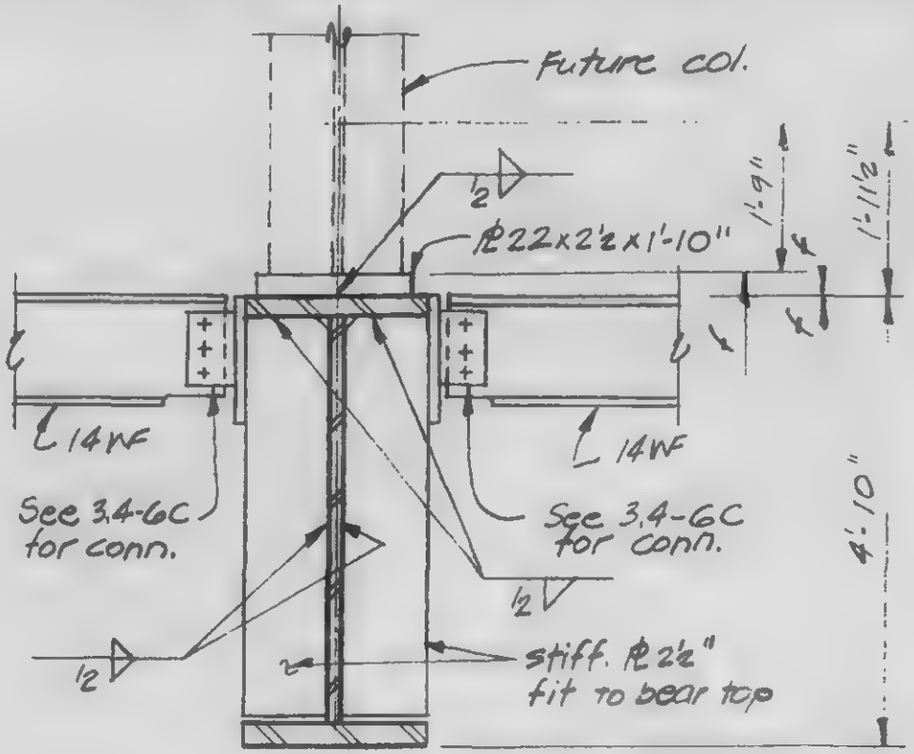

E

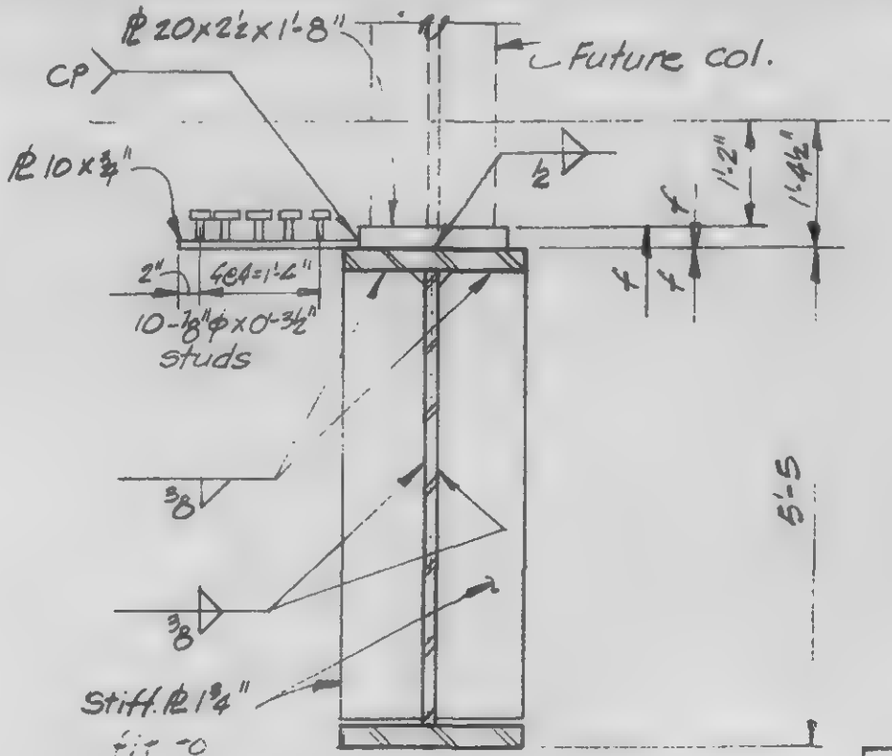

F

LICENSED PROFESSIONAL ENGINEER — LESLIE E. ROBERTSON — No. 34260 — UNIVERSITY OF THE STATE OF NEW YORK

DRAWN

REVIEWED

13-K 3.4-7

SKILLING, HELLE, CHRISTIANSEN, ROBERTSON — Structural & Civil Engineers

PROJECT: THE WORLD TRADE CENTER

TITLE: GIRDER DETAILS AT FUTURE COLS.

DATE: 11-3-72

REVISIONS

RELEASED FOR CONSTRUCTION 11-24-72

6-20-73R

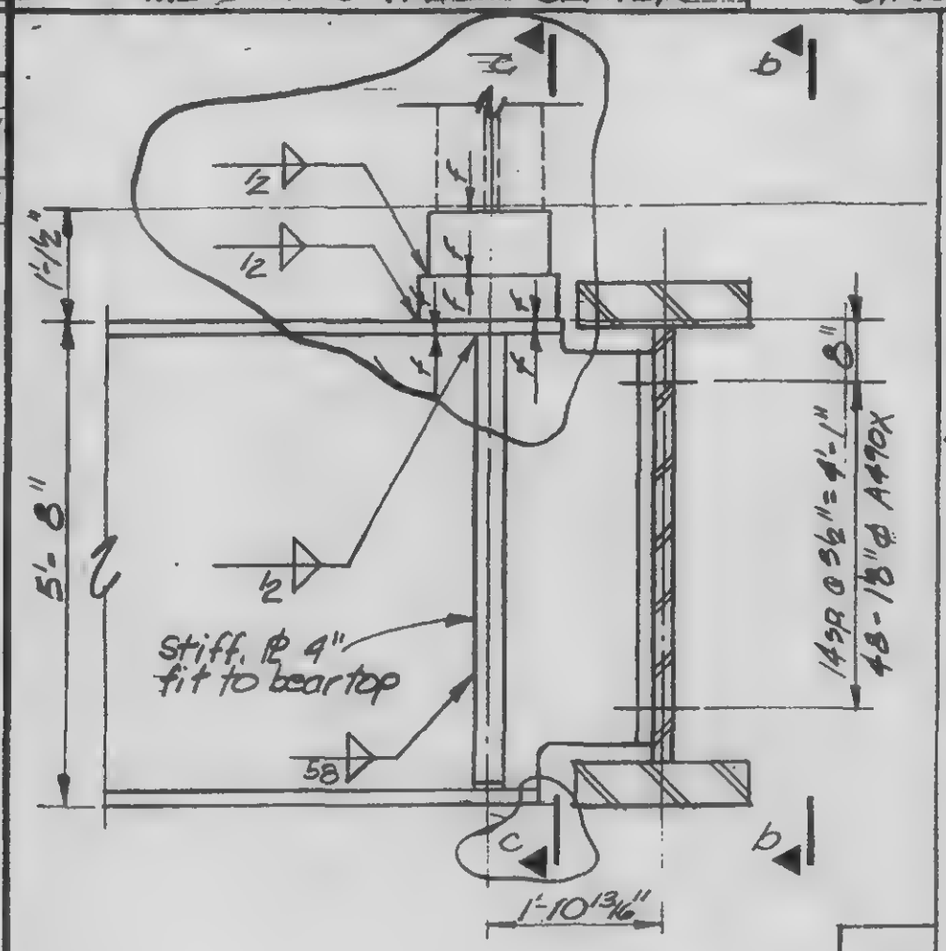

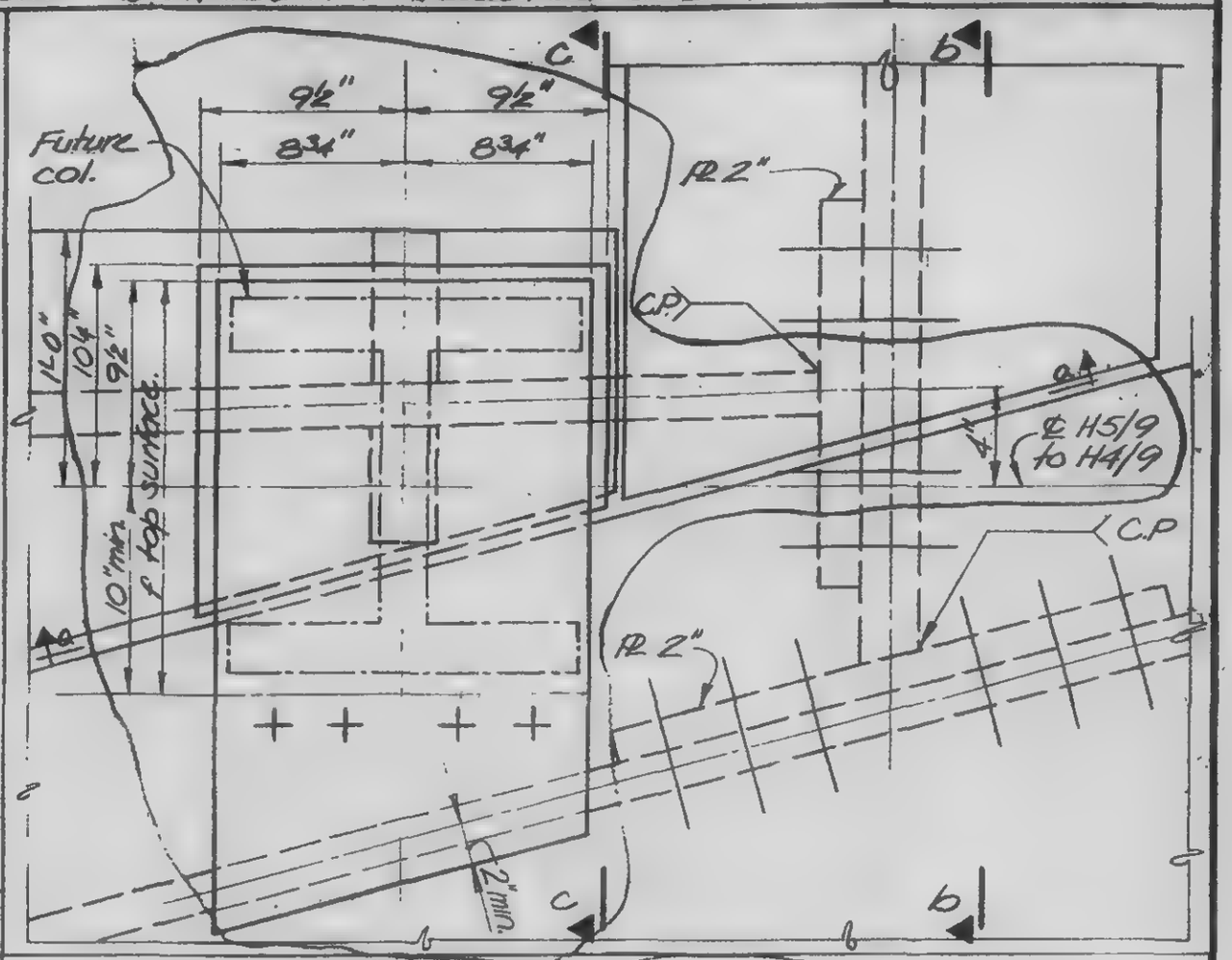

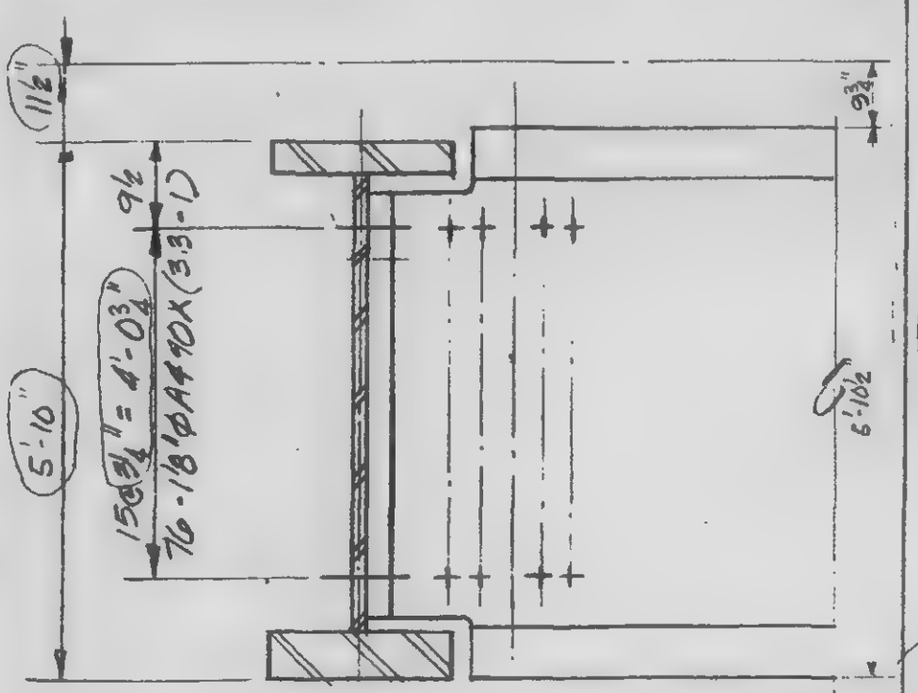

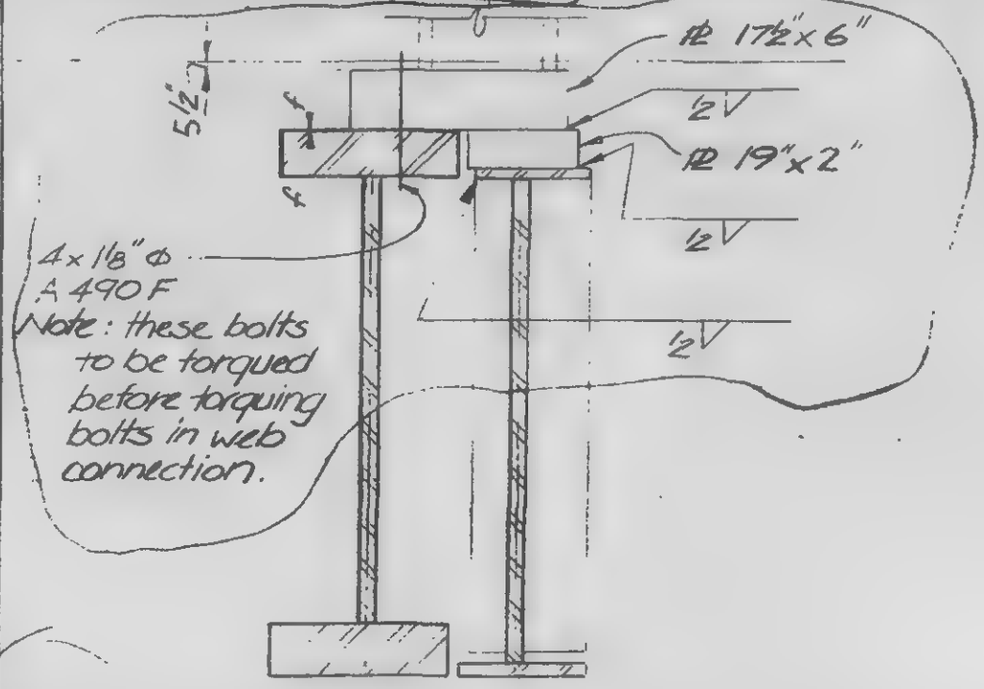

a | b | c

13-K3.4-8

DESIGNED K.C.

DRAWN P.M.O

REVIEWED W.A.B.

LICENSED PROFESSIONAL ENGINEER — LESLIE E. ROBERTSON — No. 34360 — UNIVERSITY OF THE STATE OF NEW YORK

SKILLING, HELLE, CHRISTIANSEN, ROBERTSON — Structural & Civil Engineers

PROJECT: THE WORLD TRADE CENTER | TITLE: GIRDER DETAILS AT FUTURE COLS. | DATE: 11-3-72

REVISIONS

RELEASED FOR CONSTRUCTION 11-24-72

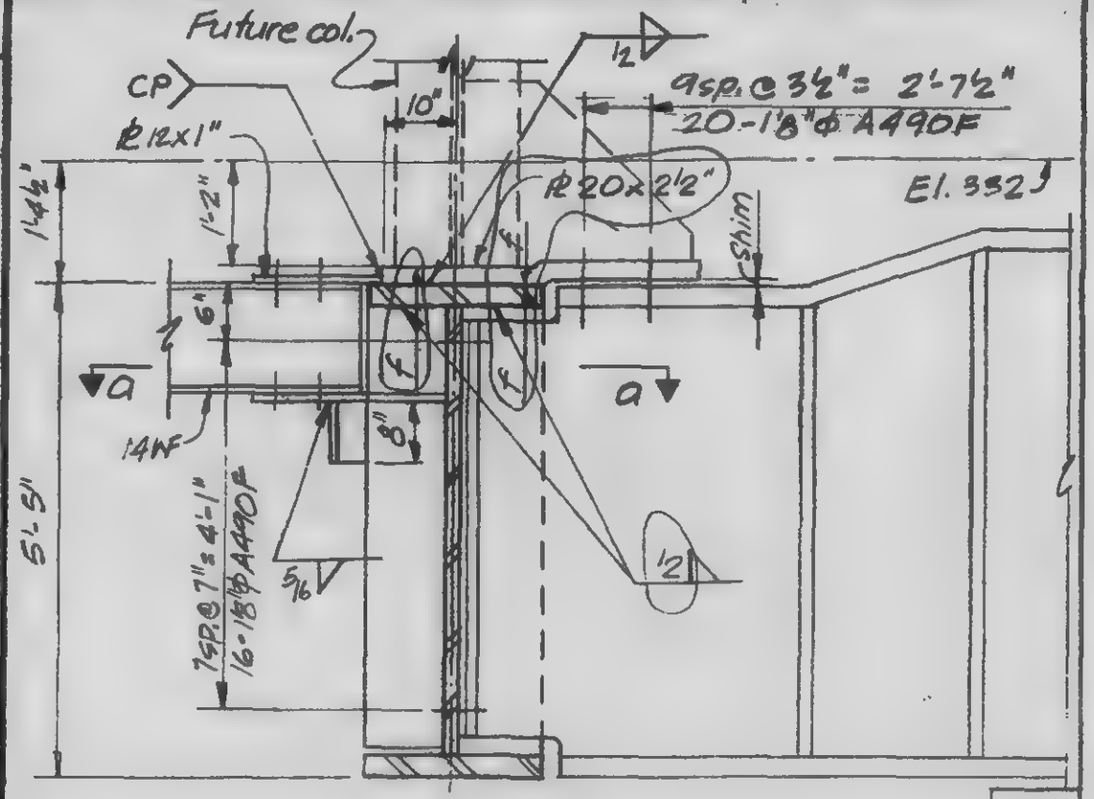

A

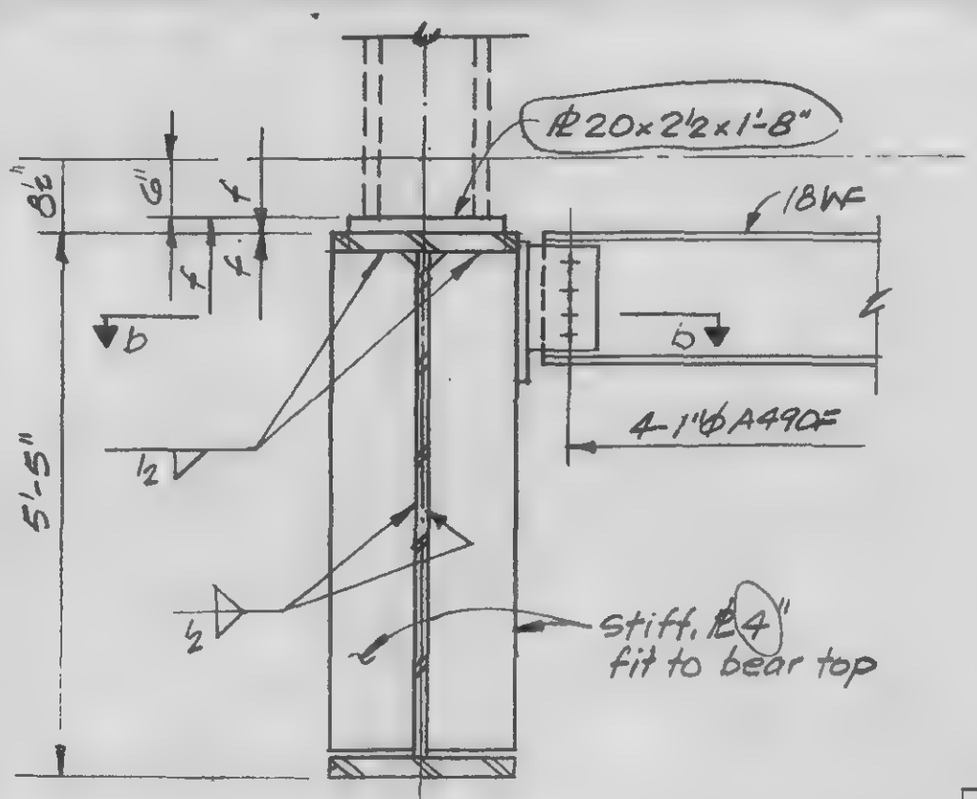

B

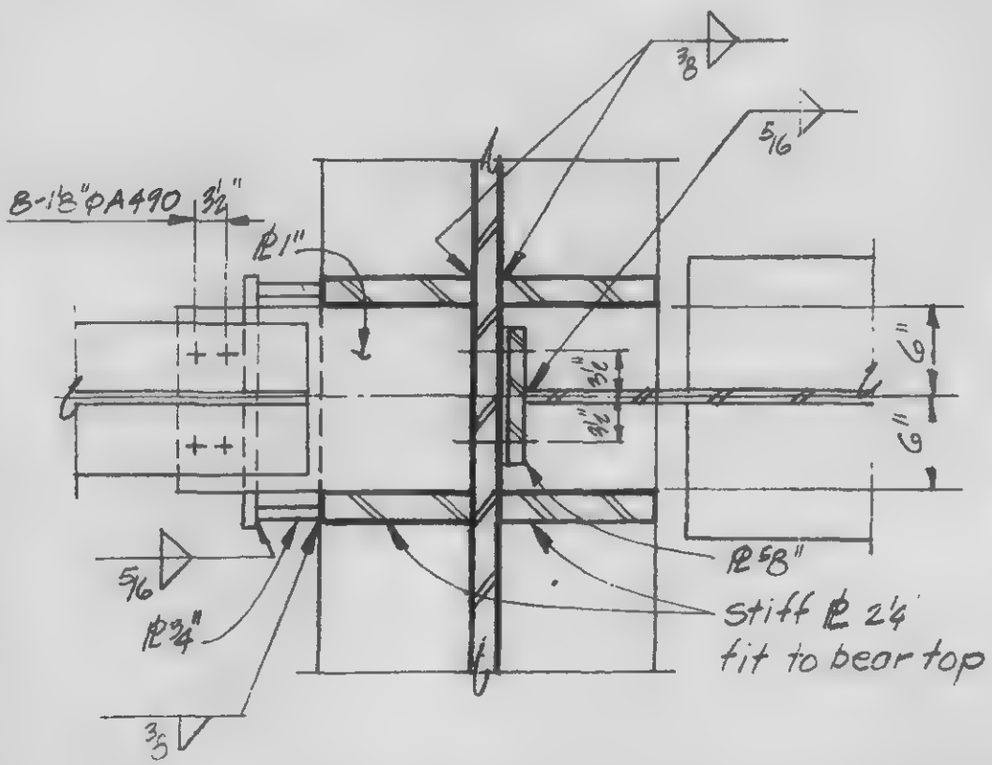

a

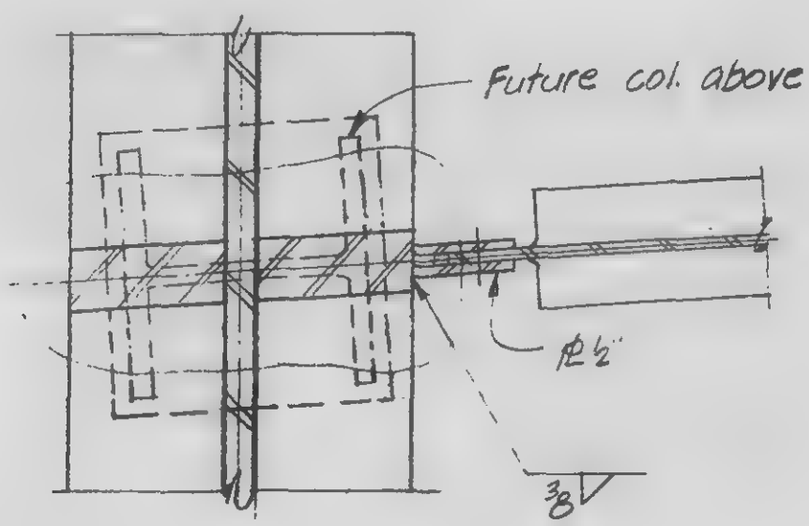

b

LICENSED PROFESSIONAL ENGINEER — LESLIE E. ROBERTSON — No. 34360 — UNIVERSITY OF THE STATE OF NEW YORK

DESIGNED

DRAWN

REVIEWED

13-K3.4-9

SKILLING, HELLE, CHRISTIANSEN, ROBERTSON — Structural & Civil Engineers

PROJECT: THE WORLD TRADE CENTER | TITLE: GIRDER DETAILS AT FUTURE COLUMNS | DATE: 11-3-72

REVISIONS

RELEASED FOR CONSTRUCTION 11-24-72

6-4-73

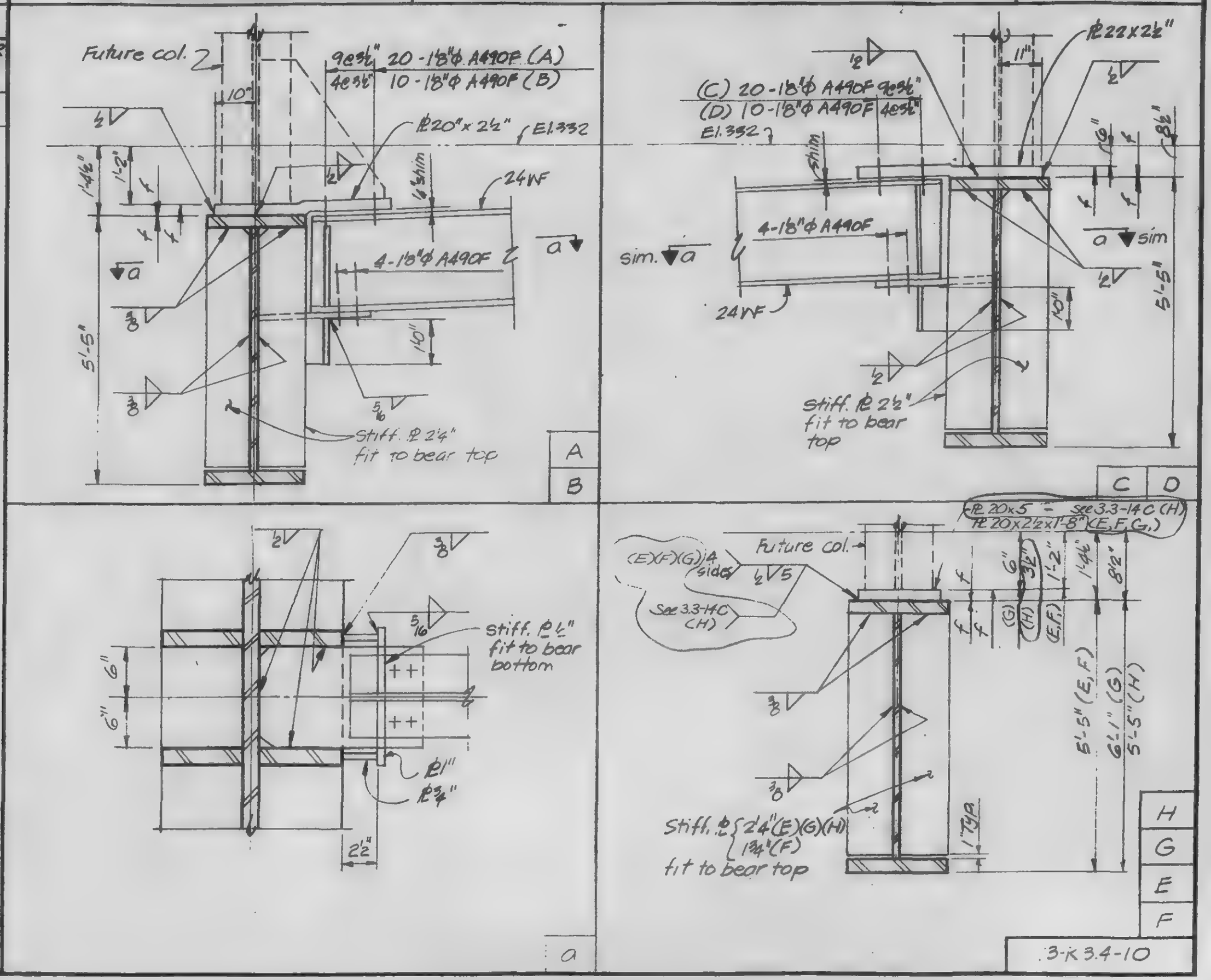

LICENSED PROFESSIONAL ENGINEER LESLIE E. ROBERTSON No. 34360 UNIVERSITY OF THE STATE OF NEW YORK

DESIGNED

DRAWN

REVIEWED

3-K 3.4-10

SKILLING, HELLE, CHRISTIANSEN, ROBERTSON — Structural & Civil Engineers

PROJECT: THE WORLD TRADE CENTER | TITLE: GIRDER CONN. AT FUTURE COLUMNS | DATE: 11-3-72

REVISIONS

RELEASED FOR CONSTRUCTION 11-24-72

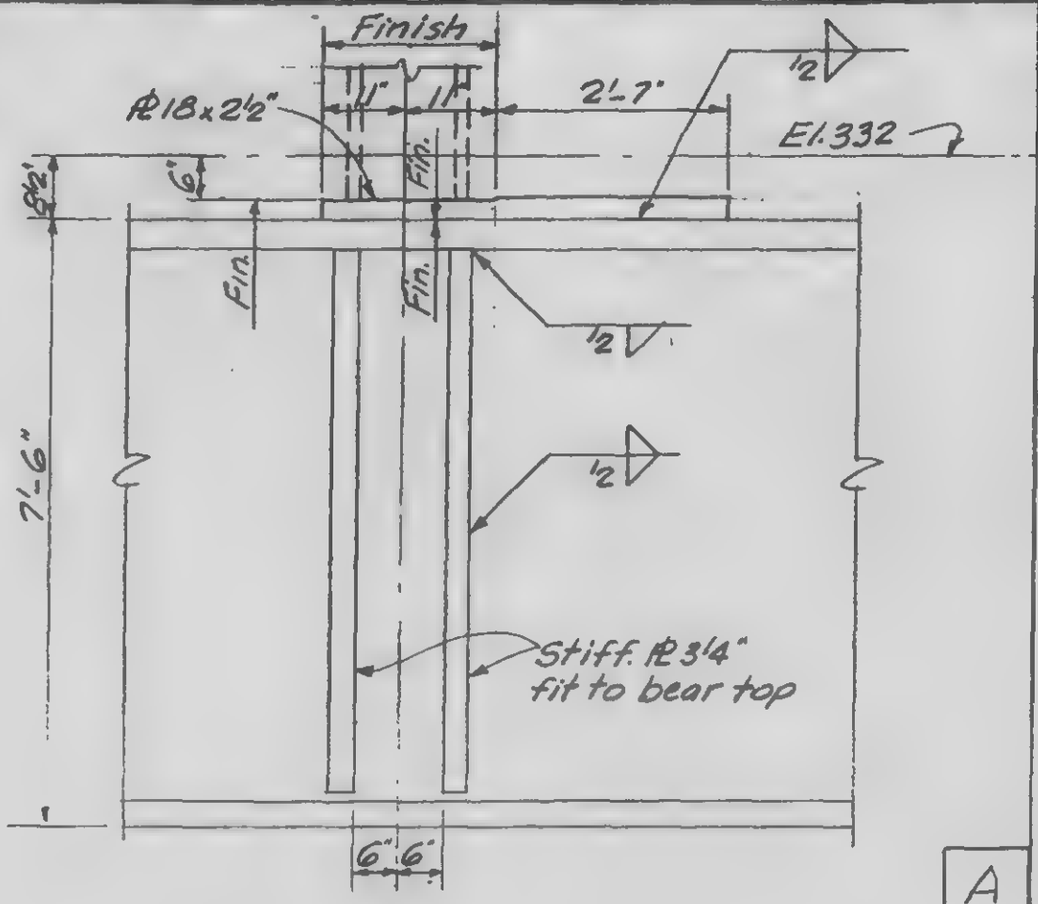

A

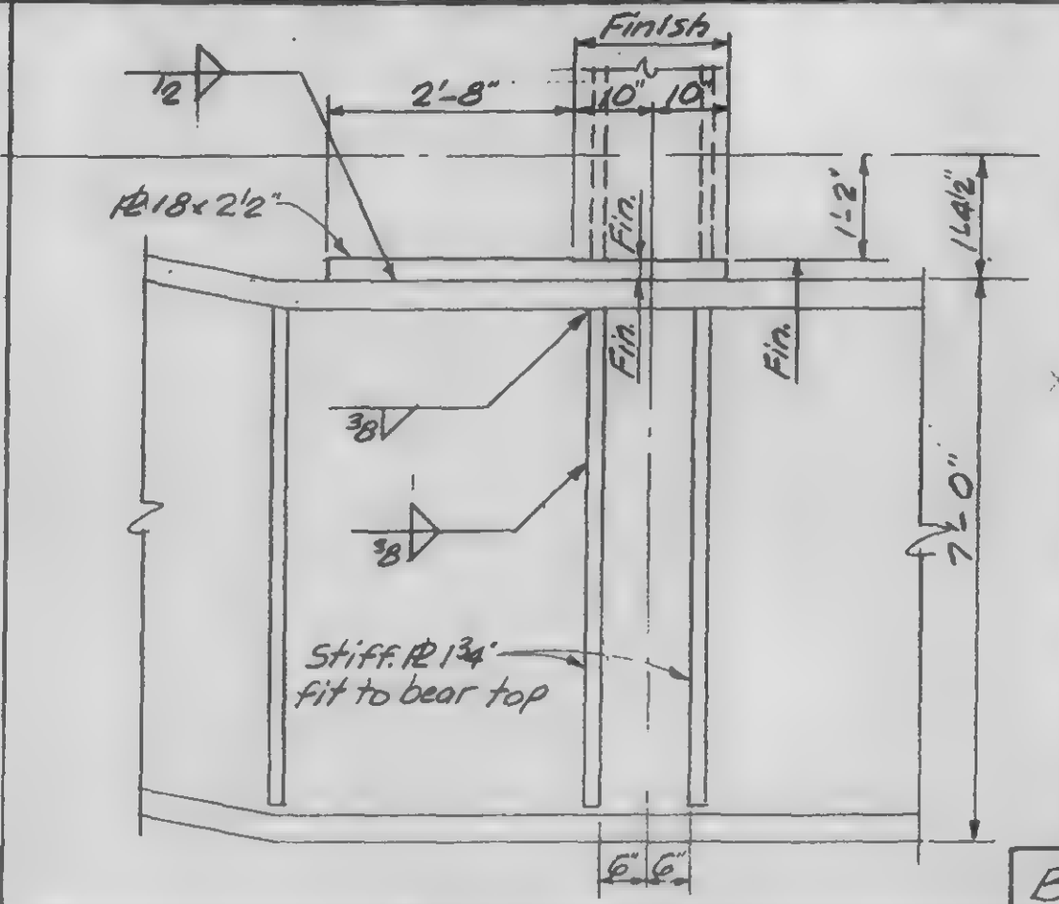

B

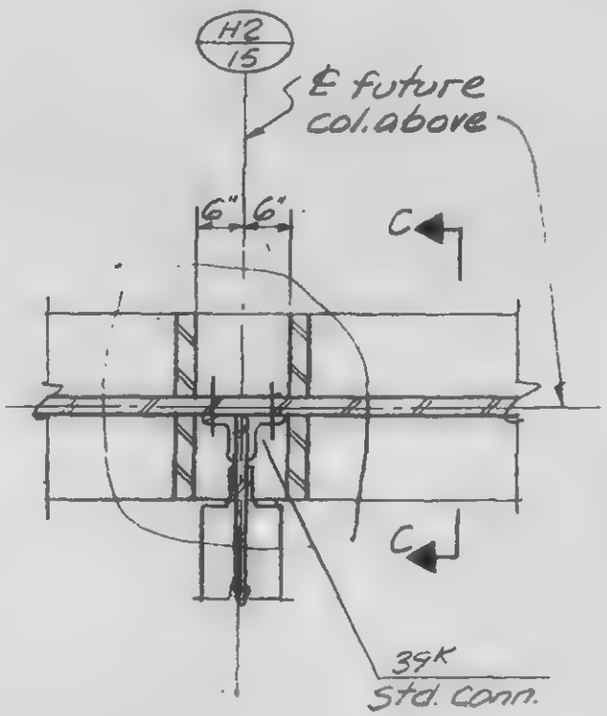

C

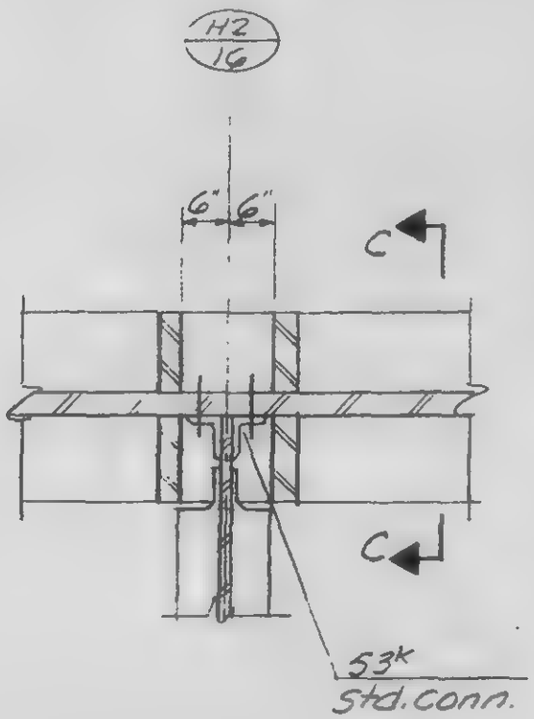

D

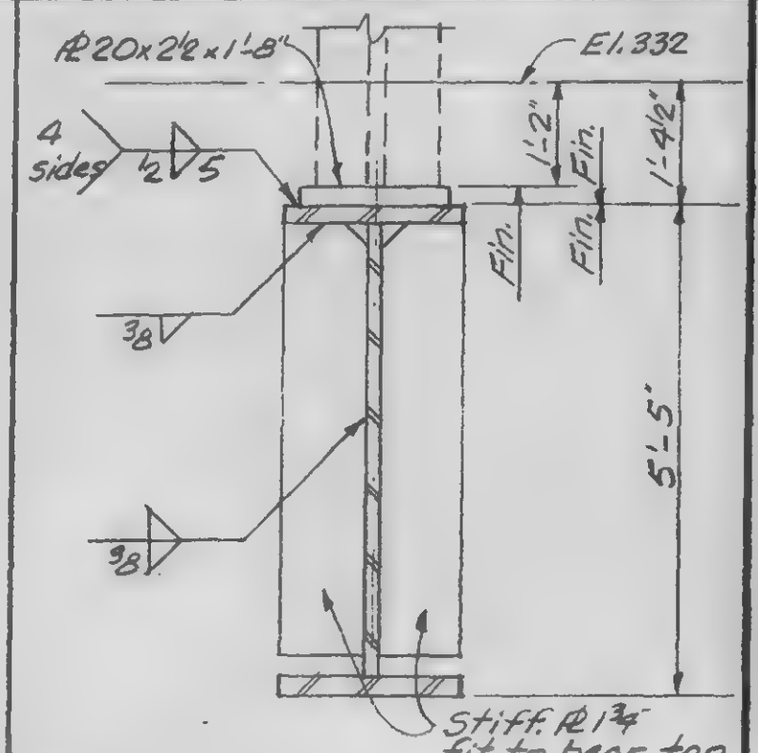

C

LICENSED PROFESSIONAL ENGINEER — LESLIE E. ROBERTSON — No 34360 — UNIVERSITY OF THE STATE OF NEW YORK

DESIGNED

DRAWN A.L. Franqui

REVIEWED

13-K3.4-11

SKILLING, HELLE, CHRISTIANSEN, ROBERTSON — Structural & Civil Engineers

PROJECT THE WORLD TRADE CENTER | TITLE GIRDER DETAILS AT FUTURE COLUMNS | DATE 11-3-72

REVISIONS

Released for construction 11-24-72

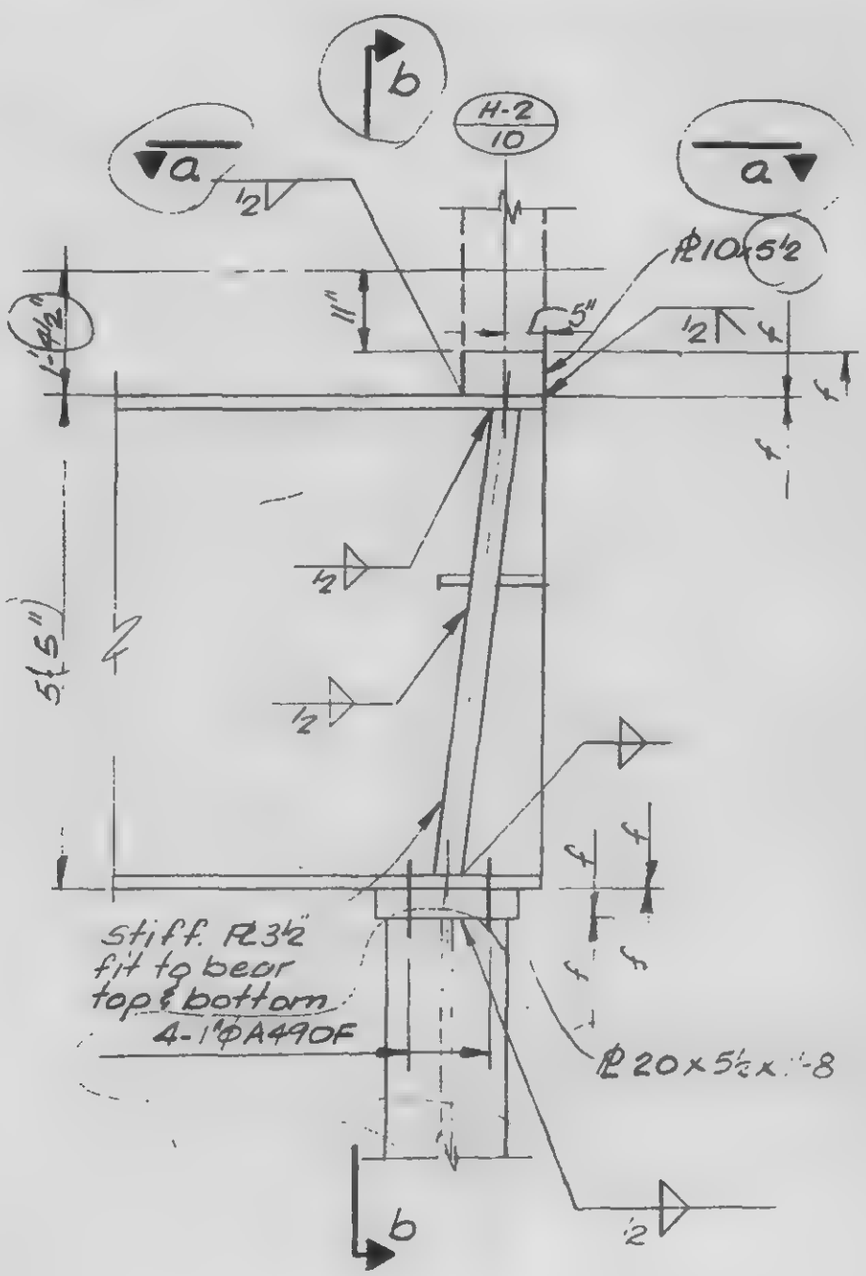

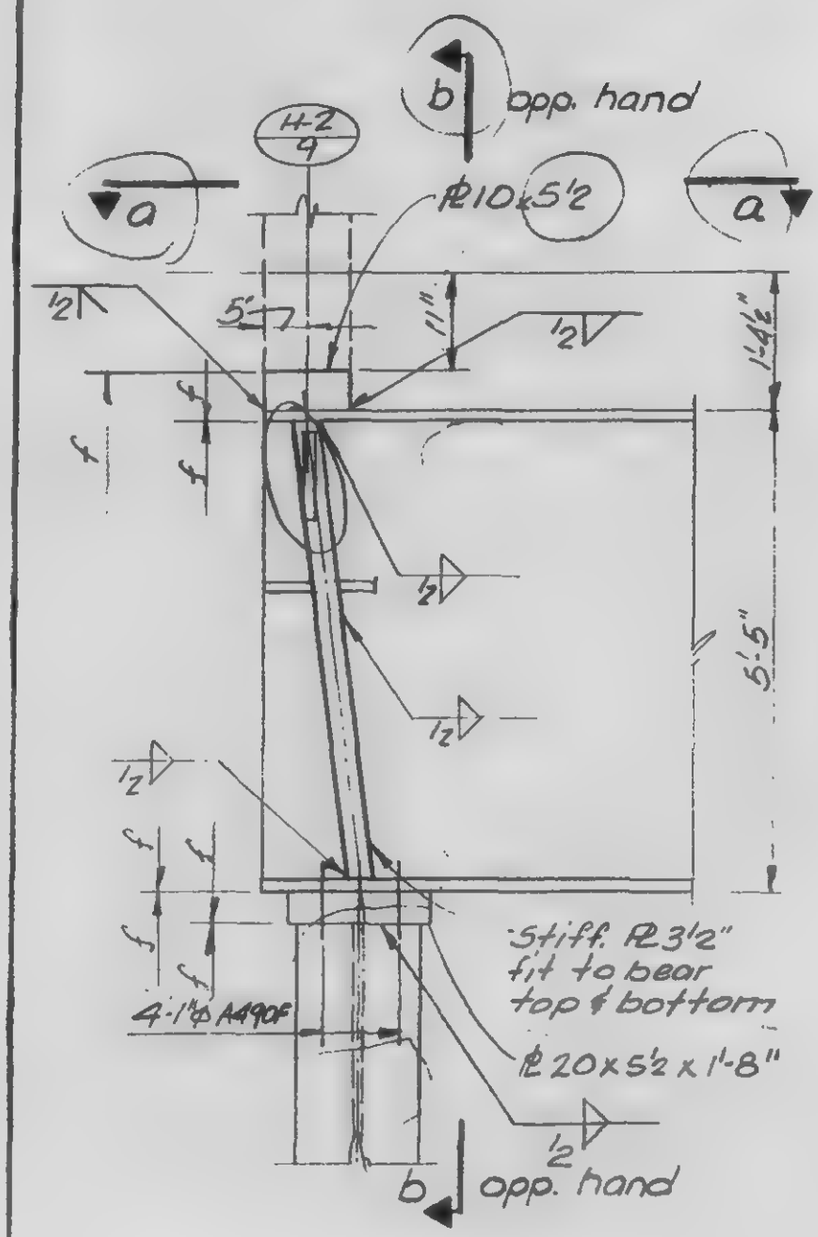

LICENSED PROFESSIONAL ENGINEER — LESLIE E. ROBERTSON — No. 34360 — UNIVERSITY OF THE STATE OF NEW YORK

DESIGNED

DRAWN TR

REVIEWED

A | B

13-K3.4-12.1

SKILLING, HELLE, CHRISTIANSEN, ROBERTSON — Structural & Civil Engineers

PROJECT: THE WORLD TRADE CENTER | TITLE: GIRDER DETAILS AT FUTURE COLUMNS | DATE: 11-24-72

REVISIONS

Released for construction 11-24-72

6-4-73

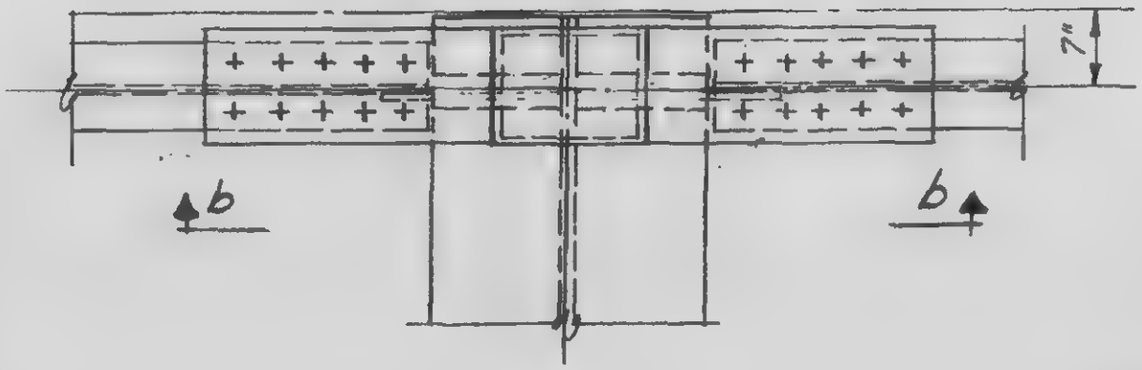

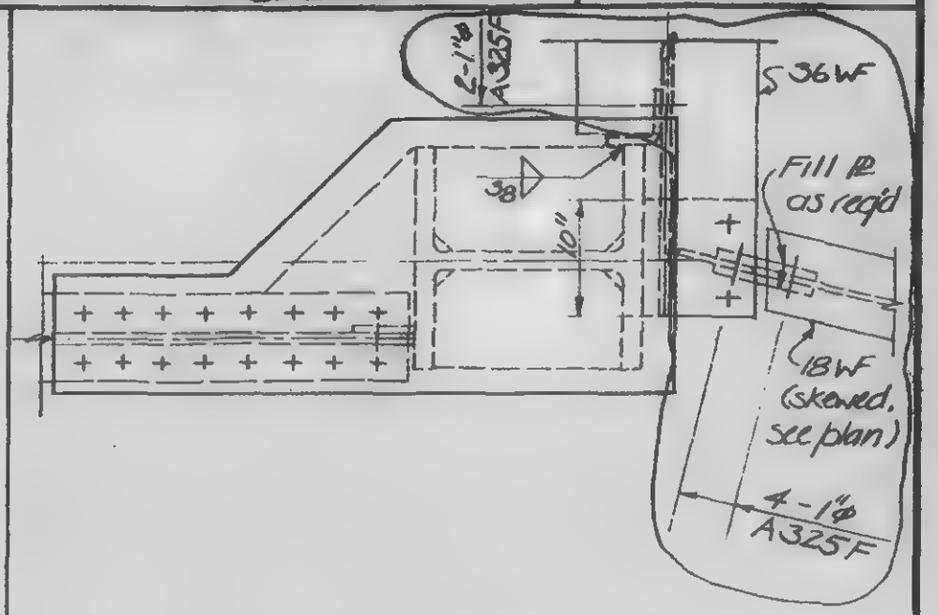

a c

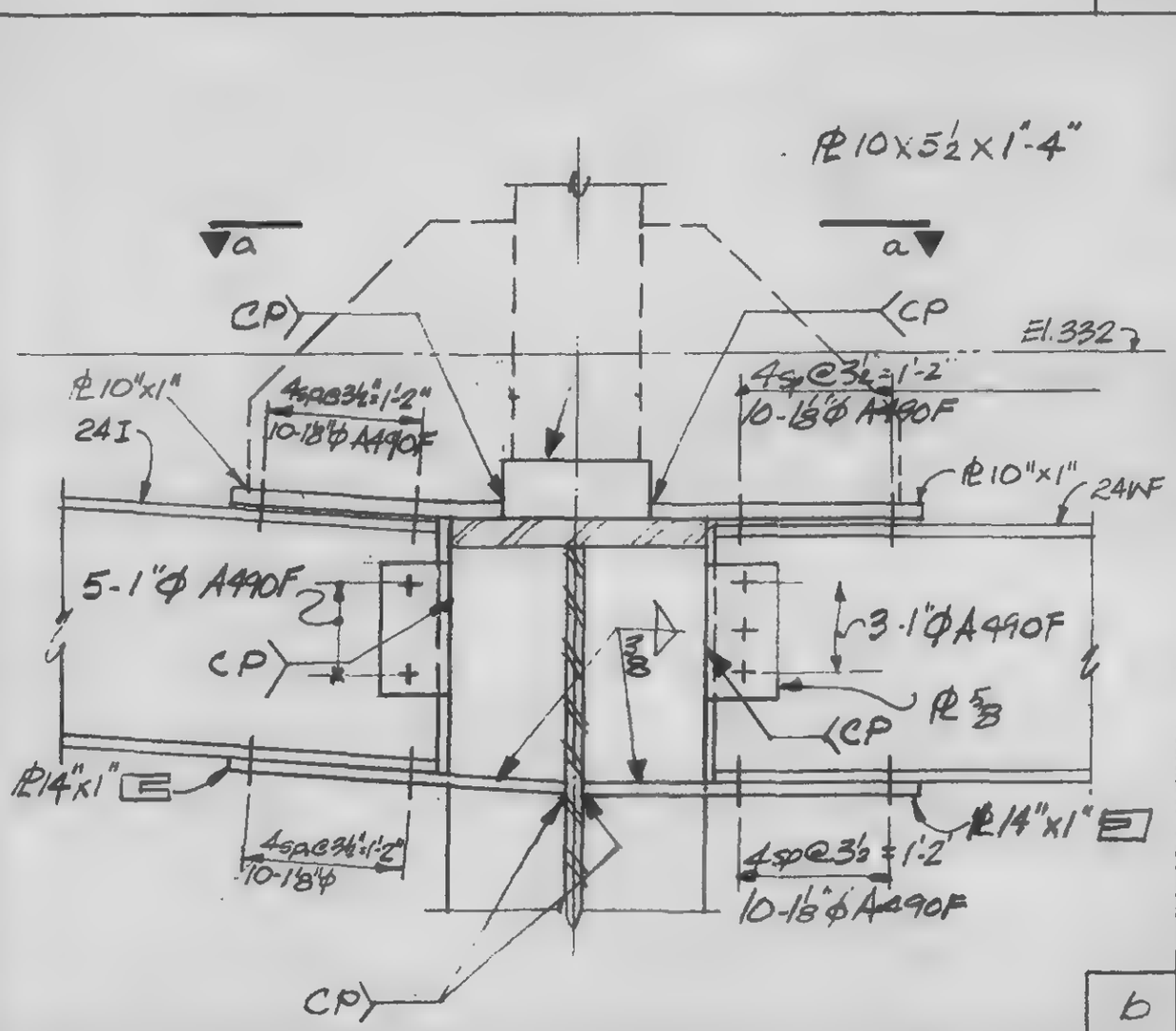

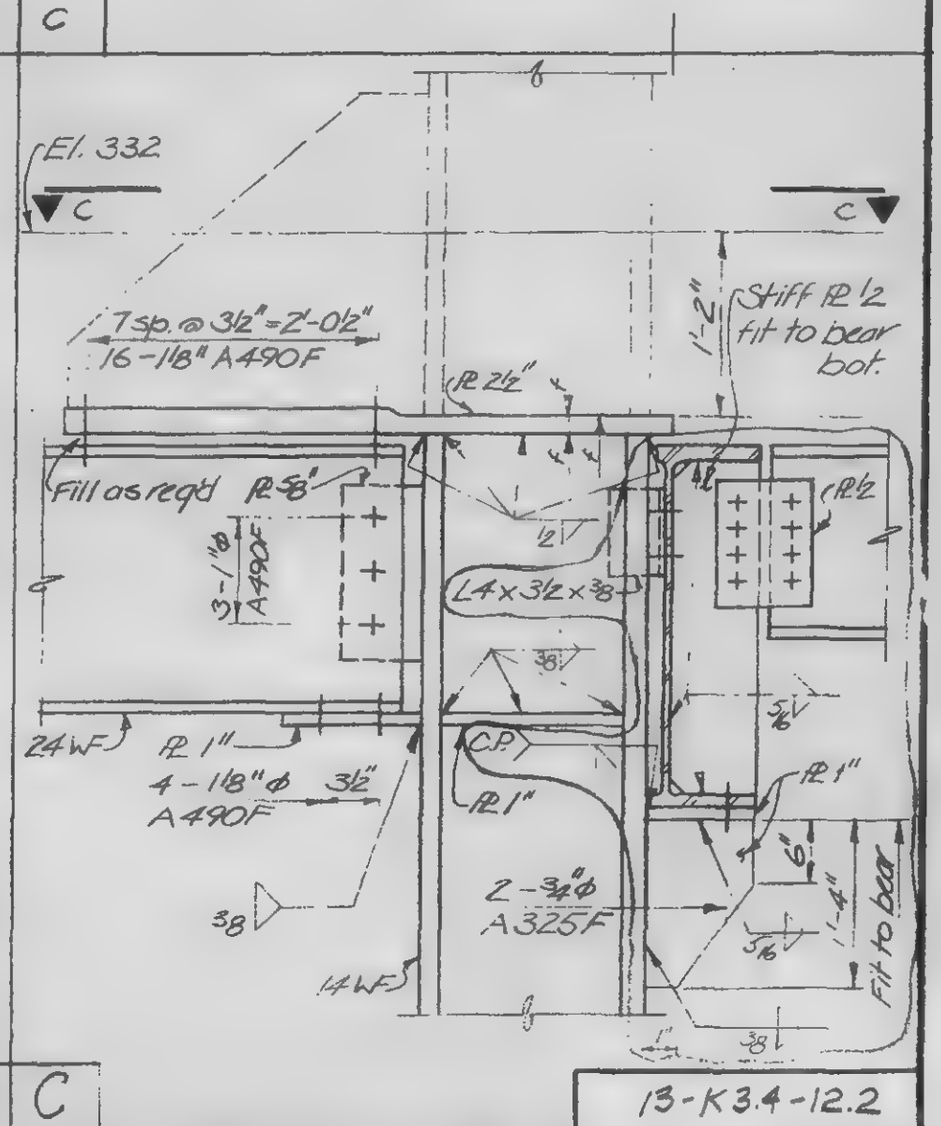

b C

13-K3.4-12.2

LICENSED PROFESSIONAL ENGINEER — LESLIE E. ROBERTSON — No. 34360 — UNIVERSITY OF THE STATE OF NEW YORK

DESIGNED

DRAWN

REVIEWED

SKILLING, HELLE, CHRISTIANSEN, ROBERTSON — Structural & Civil Engineers

PROJECT: THE WORLD TRADE CENTER | TITLE: BEAM CONNECTIONS AT GIRDER | DATE: 11-3-72

REVISIONS

RELEASE FOR CONSTRUCTION 11-20-72

2-5-73

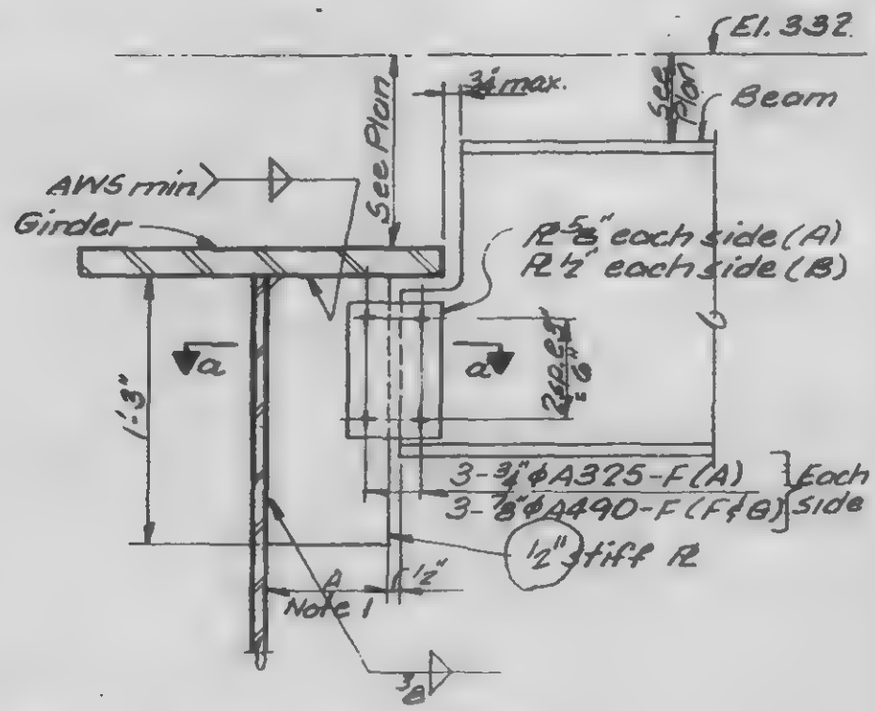

Note 1
Dim A = ⅛ or ½ of girder flange width, which ever is smaller.

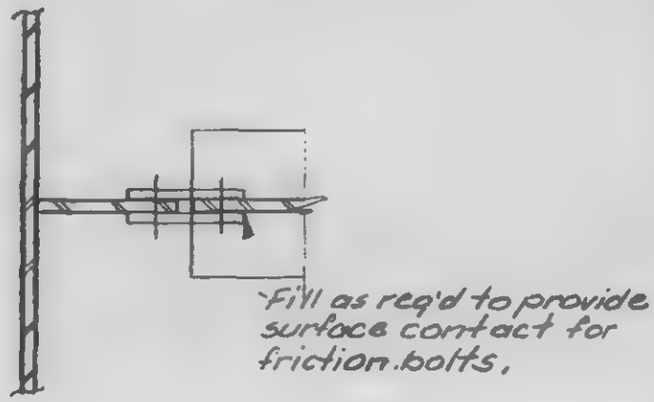

Section a-a

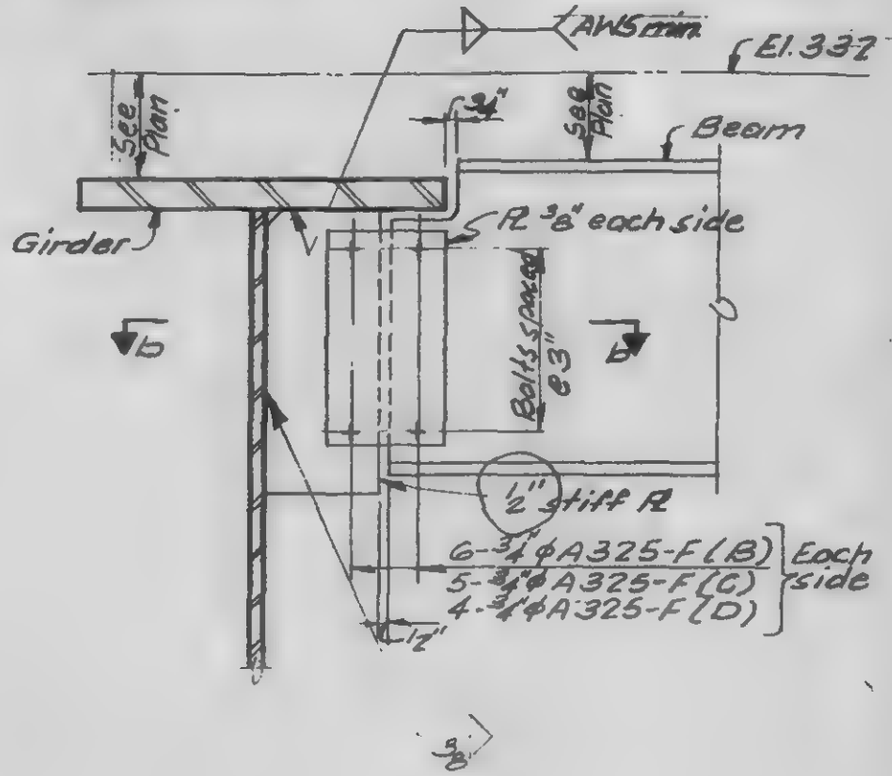

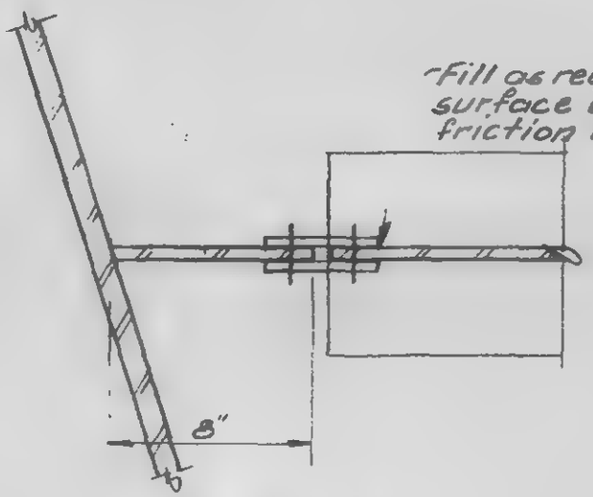

Section b-b

A	B
F	C
G	D

LICENSED PROFESSIONAL ENGINEER — LESLIE E. ROBERTSON — No 34360 — UNIVERSITY OF THE STATE OF NEW YORK

DESIGNED

DRAWN
- Hans

13-K3.5-1

SKILLING, HELLE, CHRISTIANSEN, ROBERTSON — Structural & Civil Engineers

PROJECT THE WORLD TRADE CENTER | TITLE BEAM CONNECTIONS AT GIRDERS | DATE 11-3-72

REVISIONS

RELEASE FOR CONSTRUCTION 11-20-72

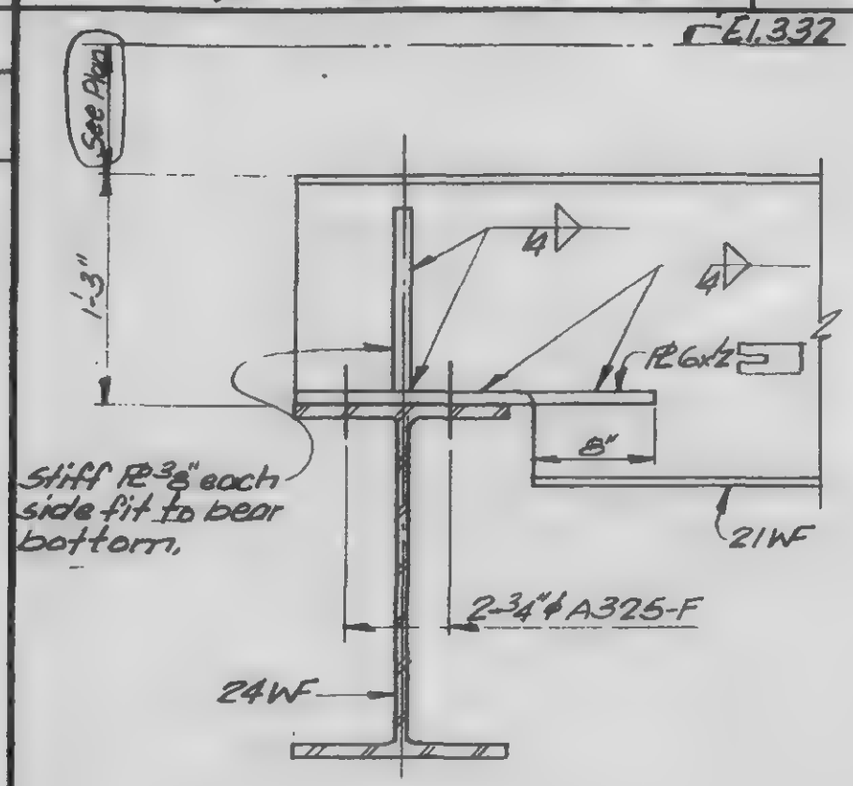

A

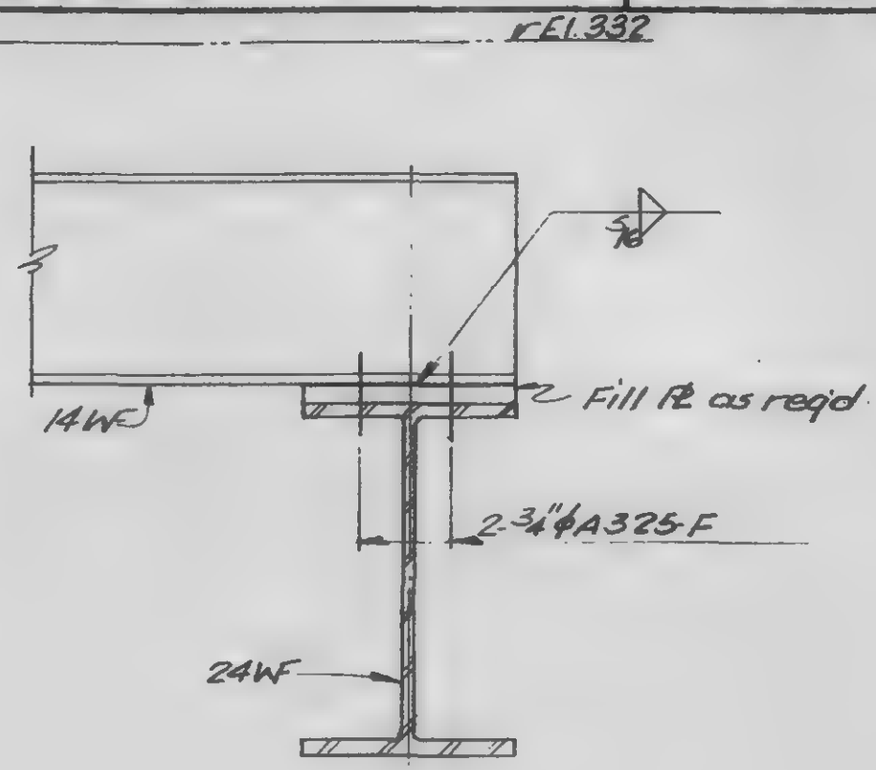

B

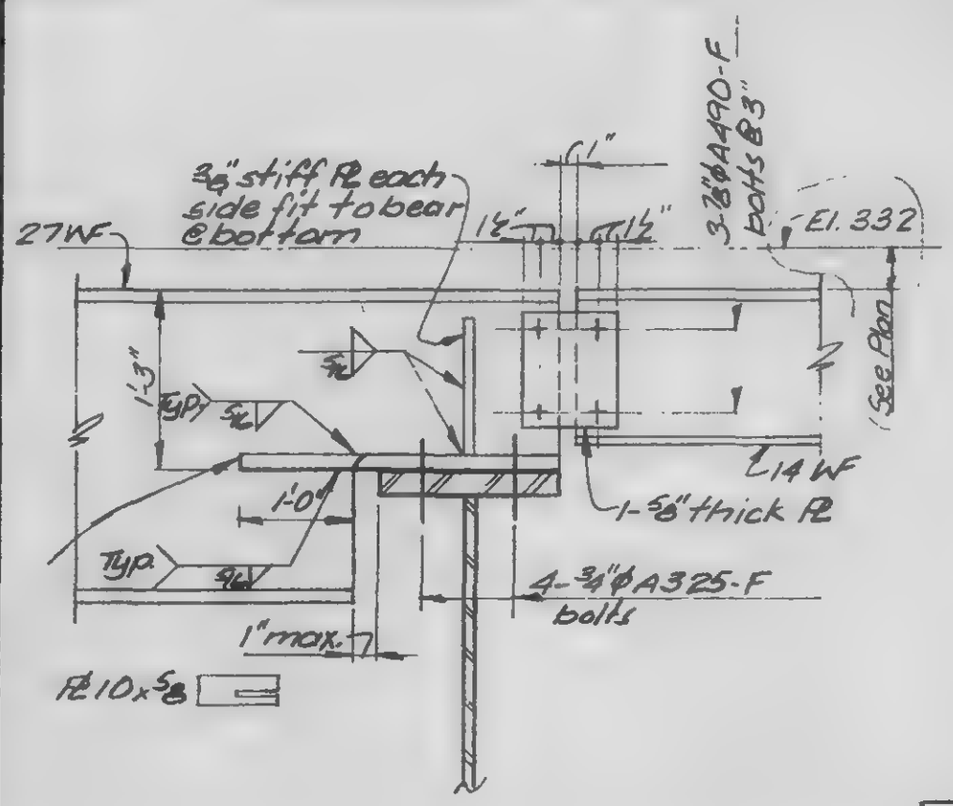

C

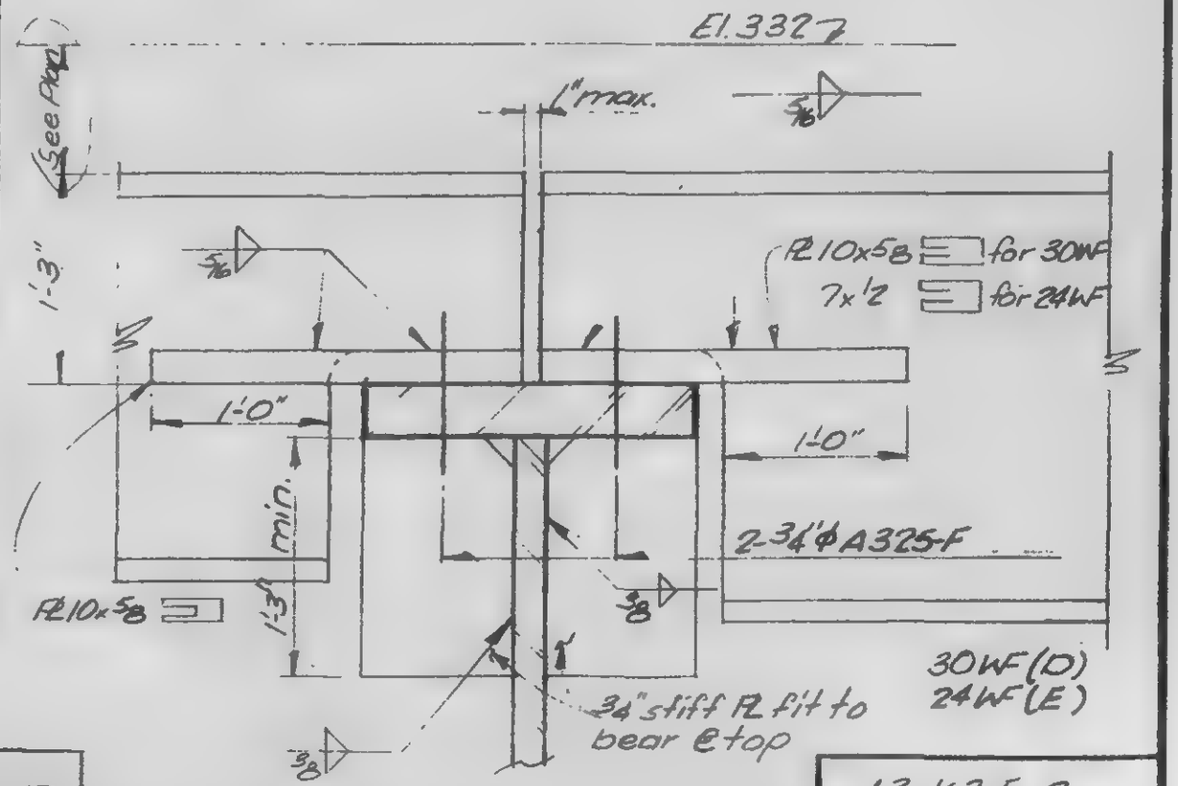

D

13-K3.5-2

LICENSED PROFESSIONAL ENGINEER — LESLIE E. ROBERTSON — No. 24960 — UNIVERSITY OF THE STATE OF NEW YORK

DESIGNED

DRAWN TR

REVIEWED

SKILLING, HELLE, CHRISTIANSEN, ROBERTSON — Structural & Civil Engineers

PROJECT: THE WORLD TRADE CENTER | TITLE: BALLROOM GIRDER - ELEVATIONS | DATE: 11-5-72

REVISIONS

RELEASE FOR CONSTRUCTION 11-20-72

12-11-72

6-4-73

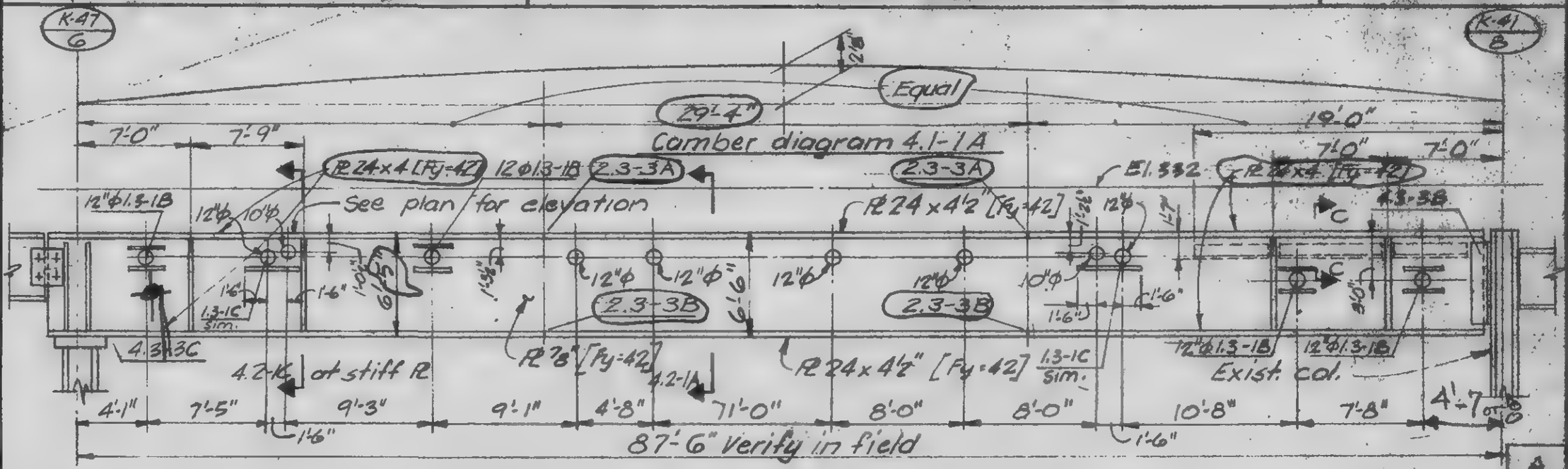

LICENSED PROFESSIONAL ENGINEER — LESLIE E. ROBERTSON — No. 34360 — UNIVERSITY OF THE STATE OF NEW YORK

WAB

DRAWN TR

13-K 4.1-1

SKILLING, HELLE, CHRISTIANSEN, ROBERTSON — Structural & Civil Engineers

PROJECT: THE WORLD TRADE CENTER | TITLE: BALLROOM GIRDER ELEVATIONS | DATE: 11-3-72

REVISIONS
- RELEASE FOR CONSTRUCTION 11-20-72
- 12-11-72
- 6-4-73

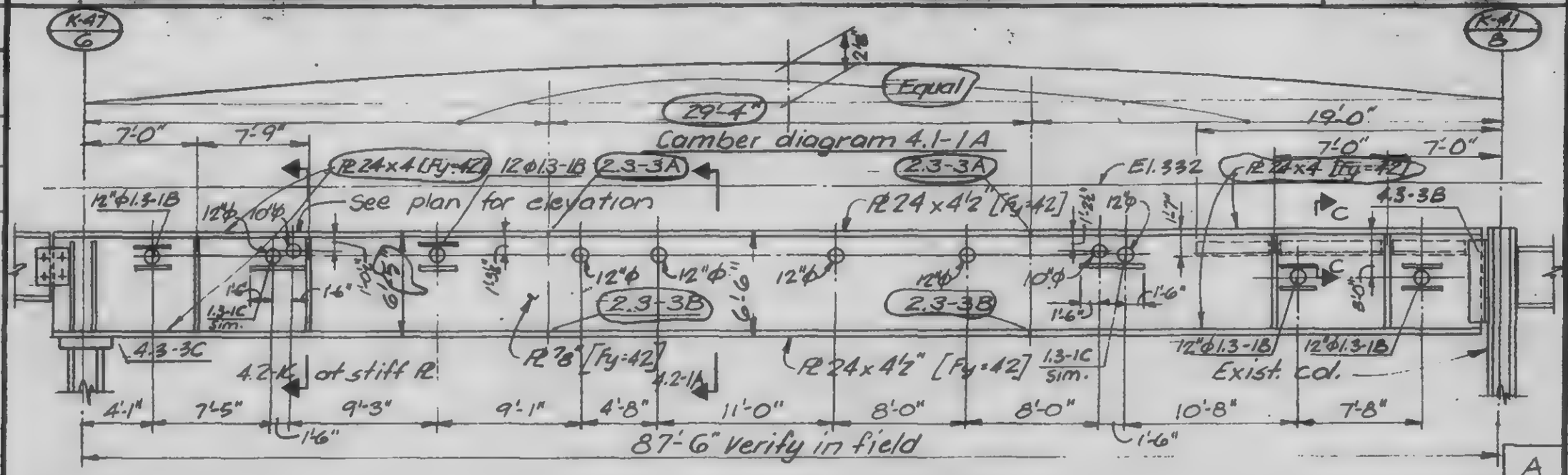

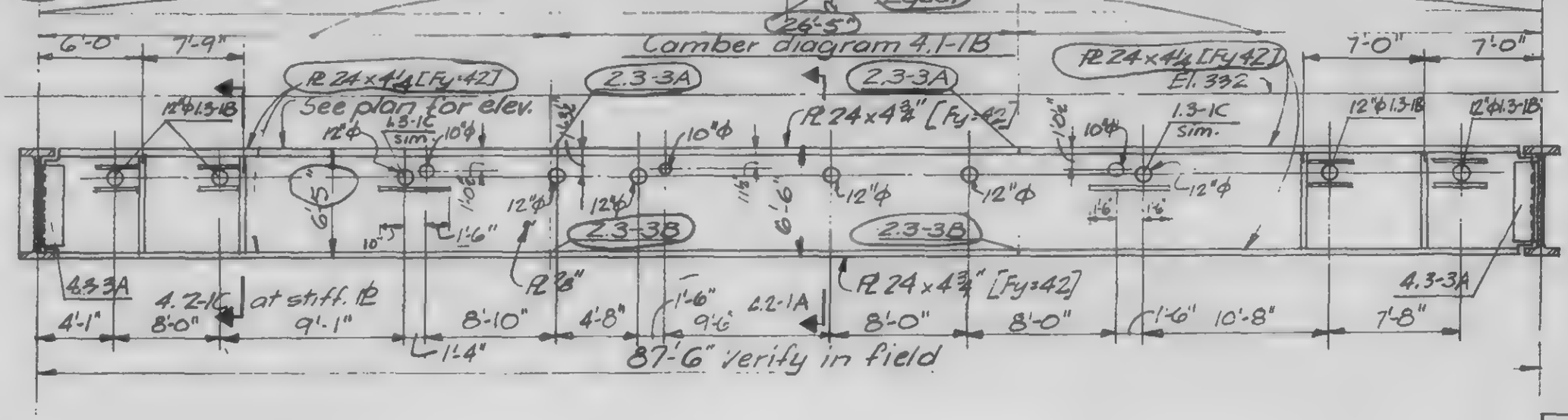

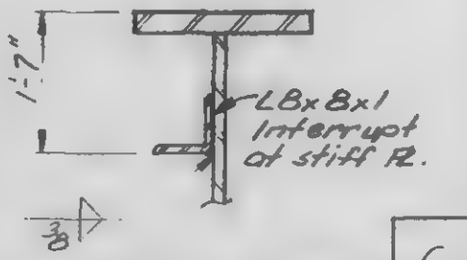

LICENSED PROFESSIONAL ENGINEER — LESLIE E. ROBERTSON — No. 34390 — UNIVERSITY OF THE STATE OF NEW YORK

DESIGNED WAB
DRAWN TR

13-K 4.1-1

SKILLING, HELLE[illegible]CHRISTIANSEN, ROBERTSON — Structural & Civil Engineers

PROJECT THE WORLD TRADE CENTER | TITLE BALLROOM GIRDER – ELEVATIONS | DATE 11-3-72

REVISIONS

RELEASE FOR CONSTRUCTION 11-20-72

6-4-73

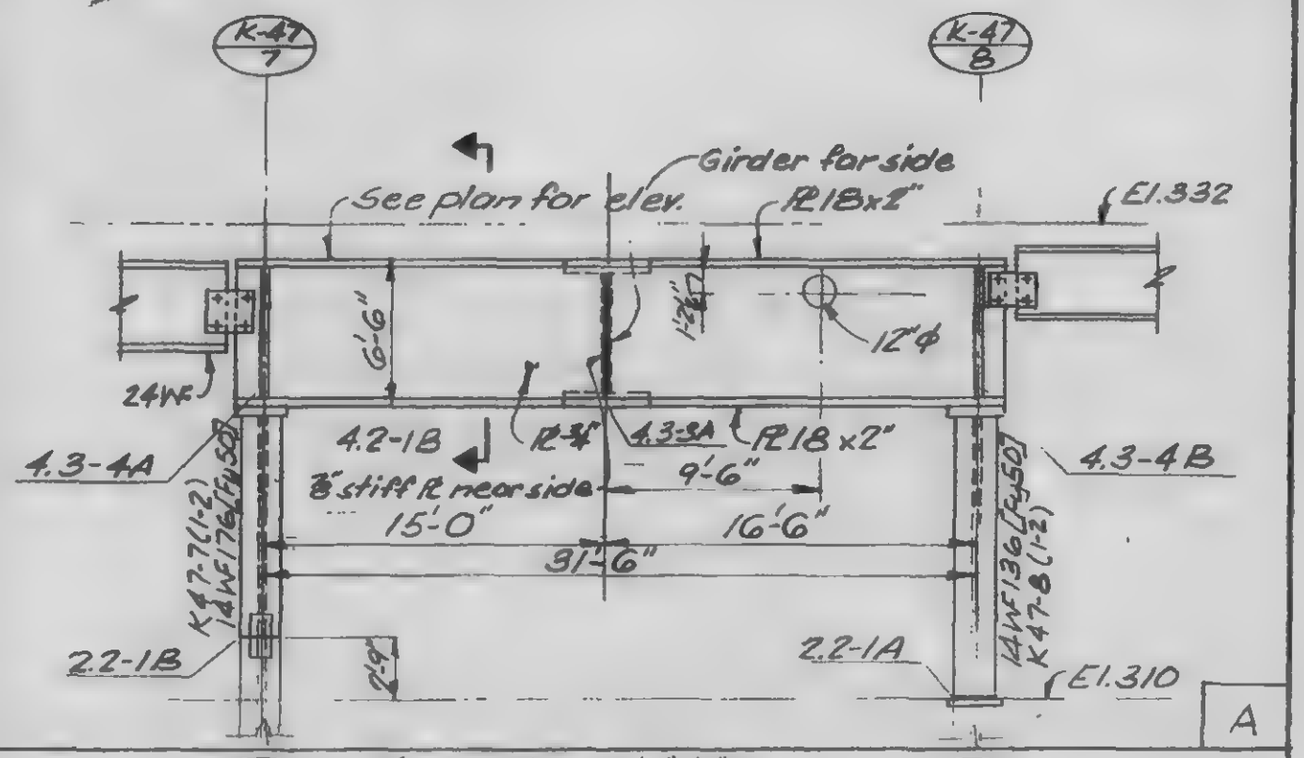

LICENSED PROFESSIONAL ENGINEER LESLIE E. ROBERTSON No 34360 UNIVERSITY OF THE STATE OF NEW YORK

DESIGNED WAB

DRAWN TR

REVIEWED

13-K-4.1-2

SKILLING, HELLE, CHRISTIANSEN, ROBERTSON — Structural & Civil Engineers

PROJECT: THE WORLD TRADE CENTER | TITLE: BALLROOM GIRDERS - TYPICAL DETAILS | DATE: 11-3-72

REVISIONS

RELEASE FOR CONSTRUCTION 11-20-72

6-4-73

A

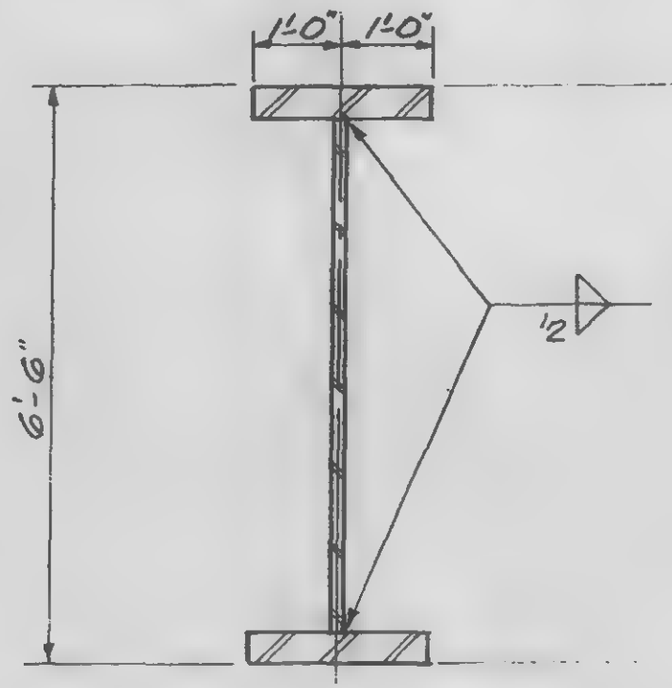

B

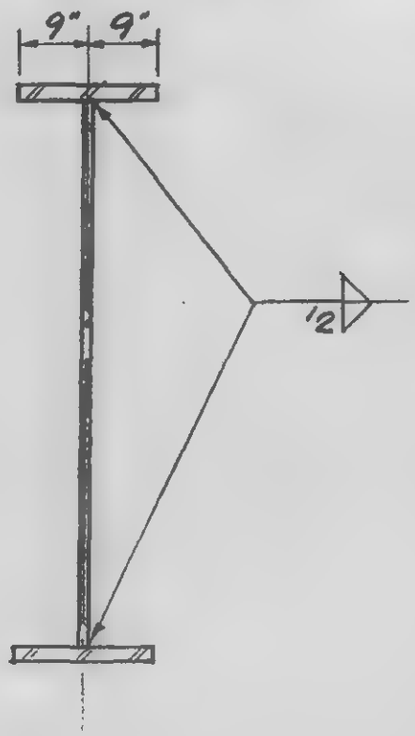

C

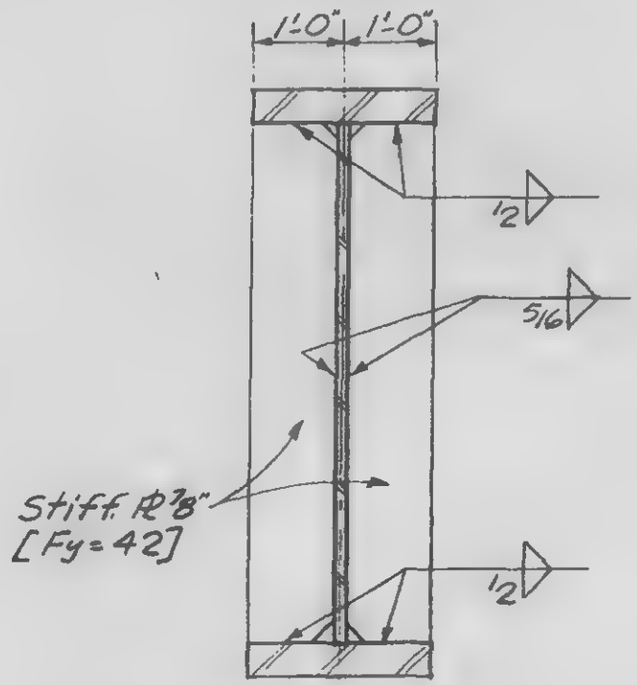

D

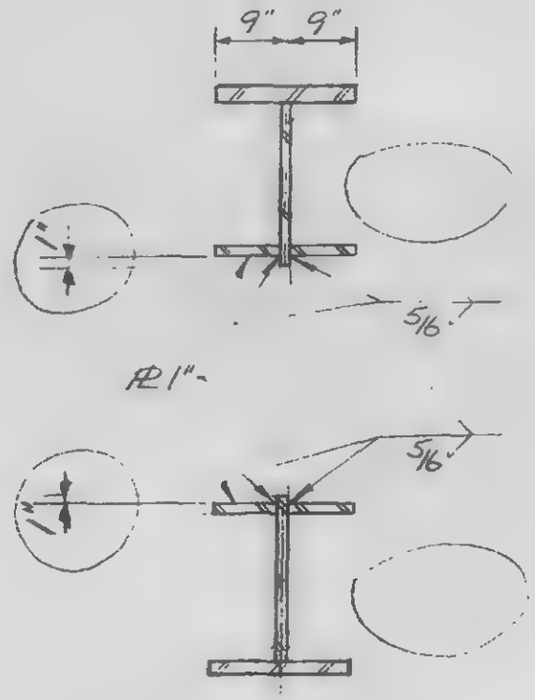

LICENSED PROFESSIONAL ENGINEER — LESLIE E. ROBERTSON — No. 34360 — UNIVERSITY OF THE STATE OF NEW YORK

DESIGNED

DRAWN A.L Franqui

REVIEWED

13-K4.2-1

SKILLING, HELLE, CHRISTIANSEN, ROBERTSON — Structural & Civil Engineers

PROJECT: THE WORLD TRADE CENTER — BALLROOM GIRDER — SLIDE CONNECTION — DATE: 11-3-72

REVISIONS

General Revision Released for construction 11-24-72

3-21-73

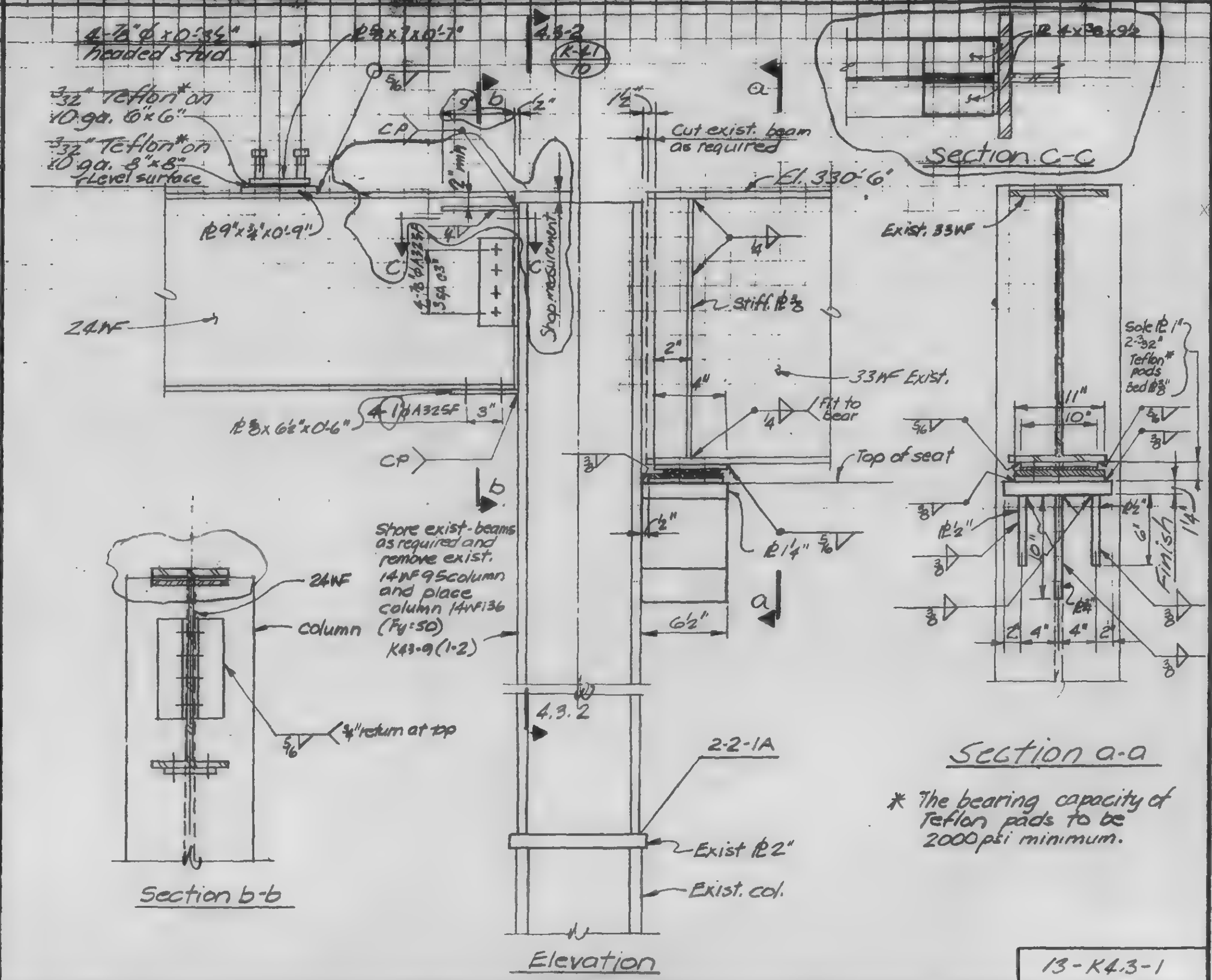

* The bearing capacity of Teflon pads to be 2000 psi minimum.

LICENSED PROFESSIONAL ENGINEER — LESLIE E. ROBERTSON — No. 34360 — UNIVERSITY OF THE STATE OF NEW YORK

DESIGNED

DRAWN

REVIEWED

13-K4.3-1

SKILLING, HELLE, CHRISTIANSEN, ROBERTSON — Structural & Civil Engineers

PROJECT: THE WORLD TRADE CENTER | TITLE: BALLROOM GIRDER - END CONNECTION | DATE: 11-3-72.

REVISIONS

final revision released for construction 11-24-72

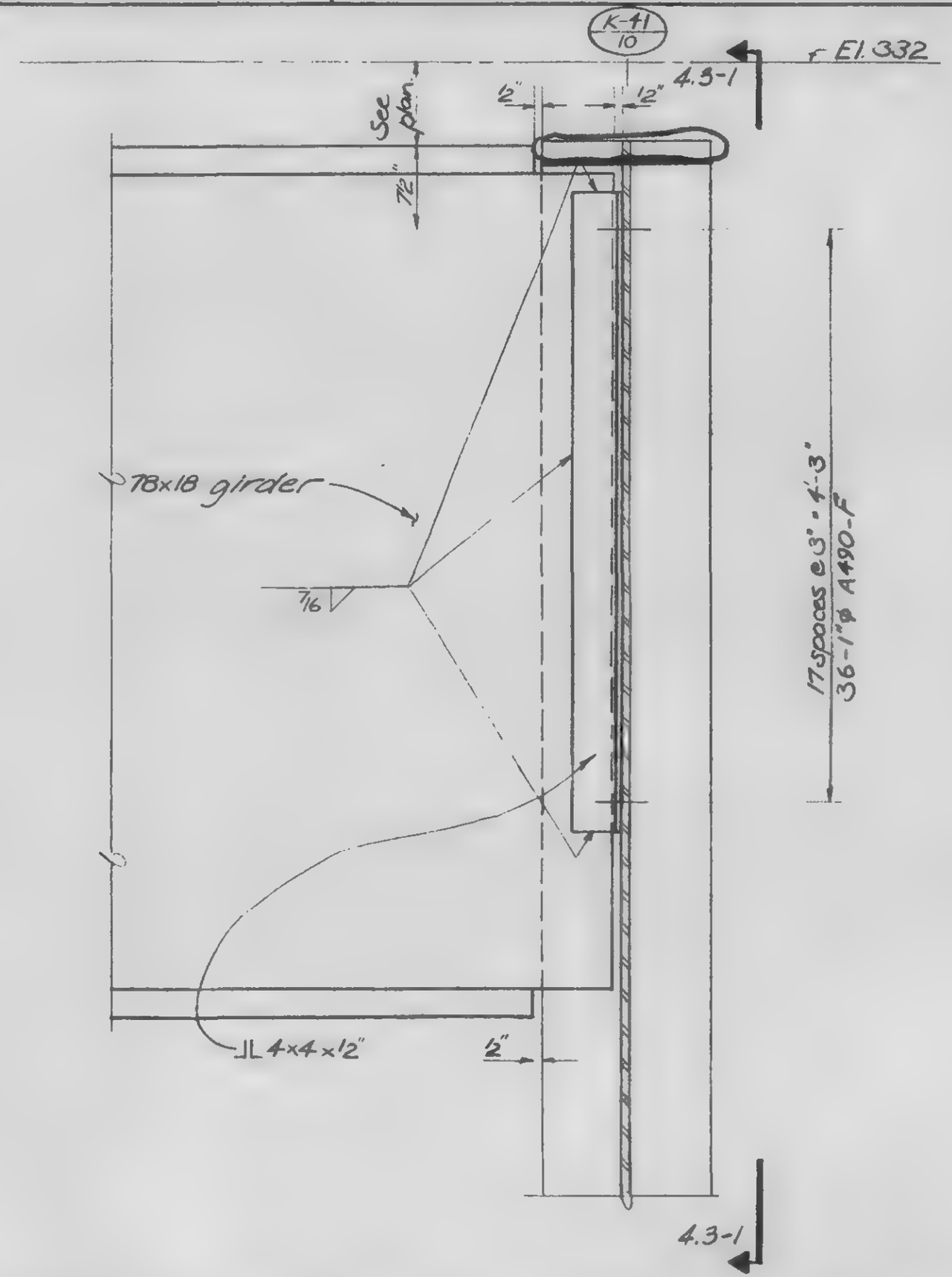

LICENSED PROFESSIONAL ENGINEER
LESLIE E. ROBERTSON
No 34360
UNIVERSITY OF THE STATE OF NEW YORK

DESIGNED

DRAWN

REVIEWED

13-K 4.3-2

SKILLING, HELLE, CHRISTIANSEN, ROBERTSON — Structural & Civil Engineers

PROJECT: THE WORLD TRADE CENTER | TITLE: BALLROOM GIRDER - END CONNECTION | DATE: 11-3-72

REVISIONS

General revision released for construction 11-24-72

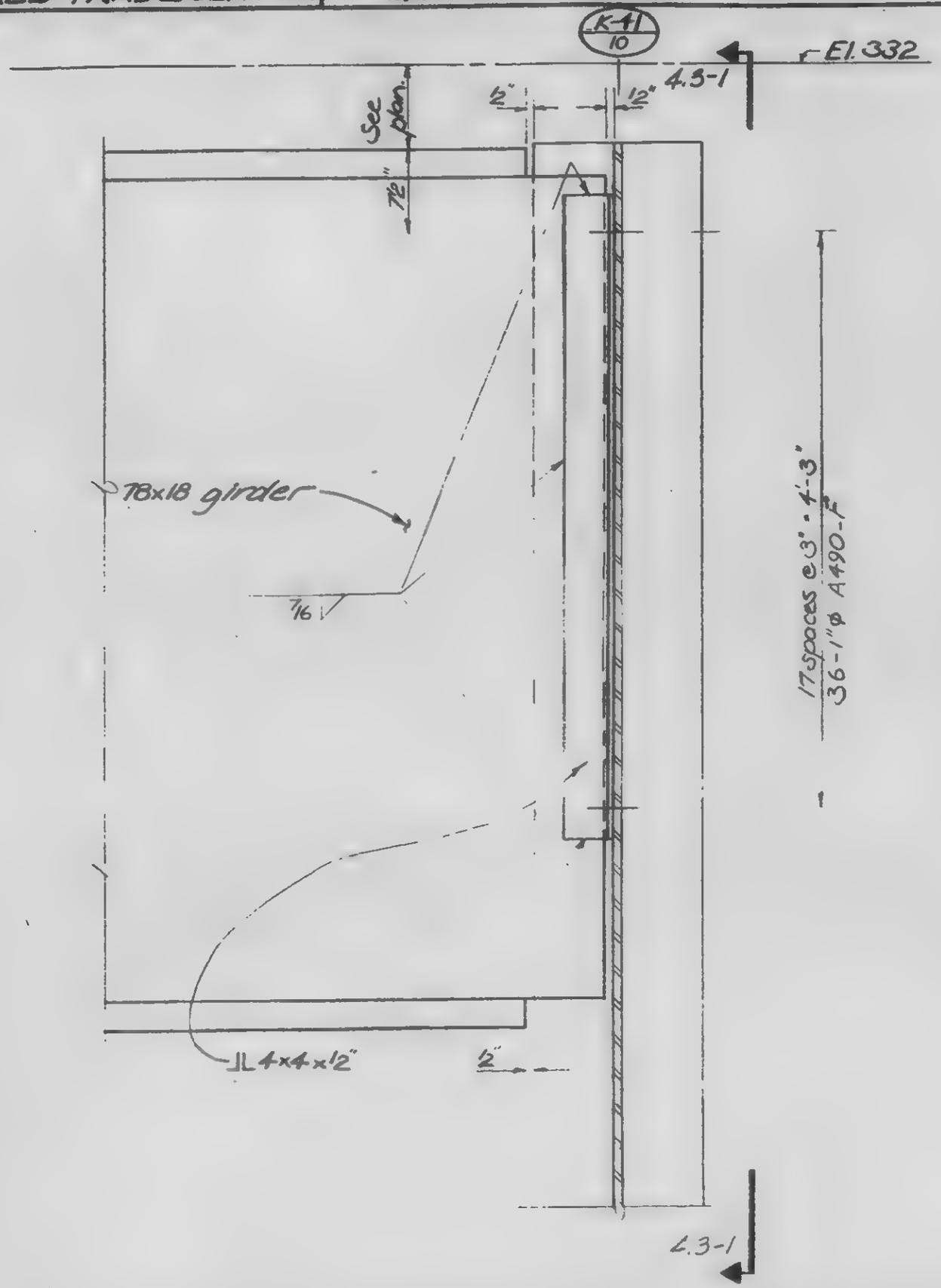

DESIGNED

DRAWN

REVIEWED

13-K 4.3-2

SKILLING, HELLE, CHRISTIANSEN, ROBERTSON — Structural & Civil Engineers

PROJECT: THE WORLD TRADE CENTER | TITLE: BALLROOM GIRDERS - END CONNECTIONS | DATE: 11-3-72

REVISIONS

RELEASE FOR CONSTRUCTION 11-20-72

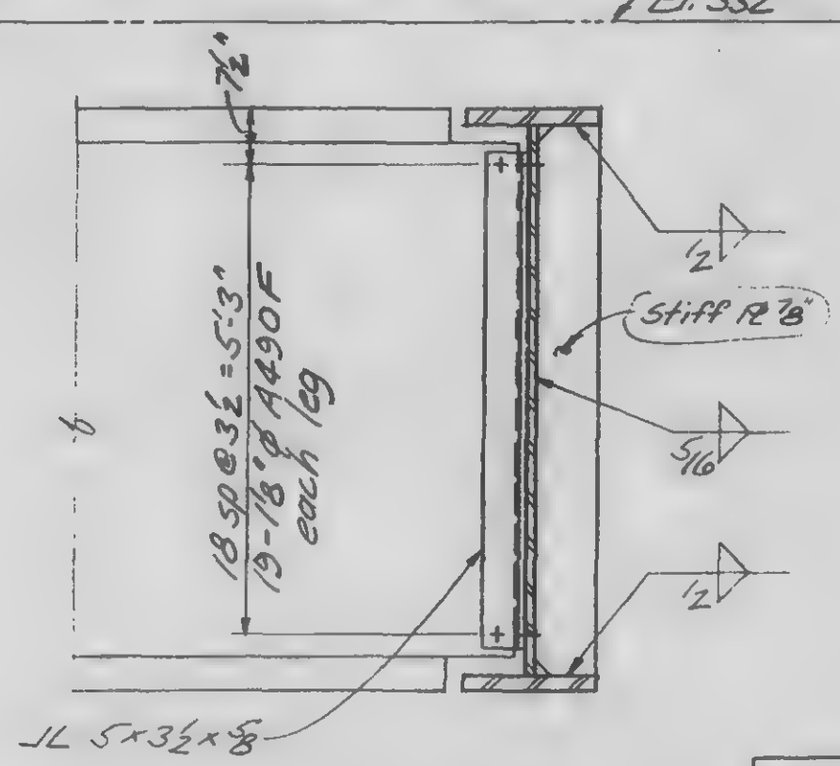

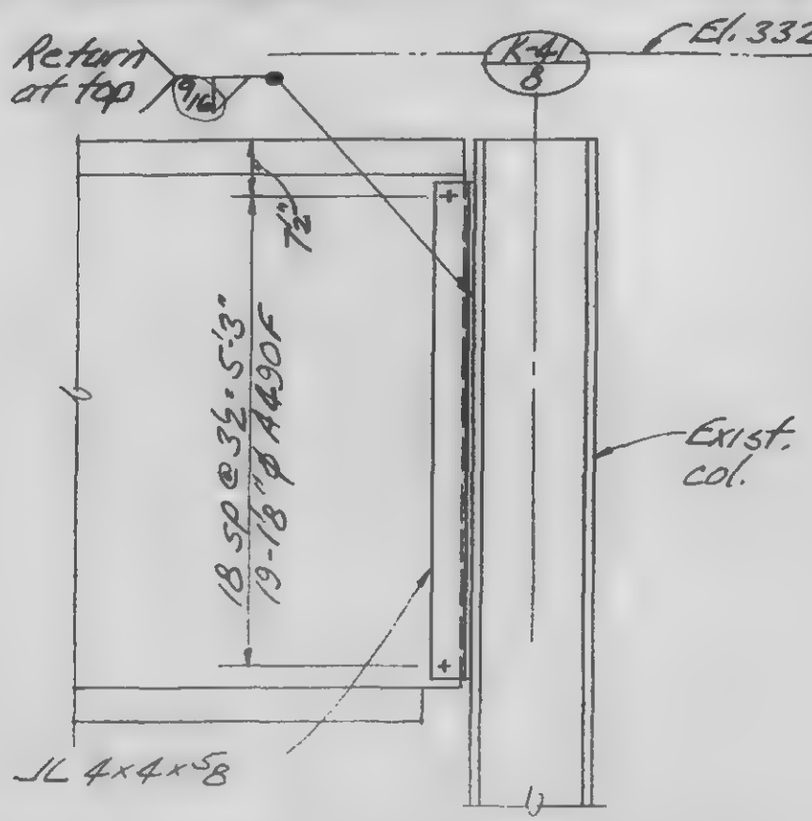

L | B

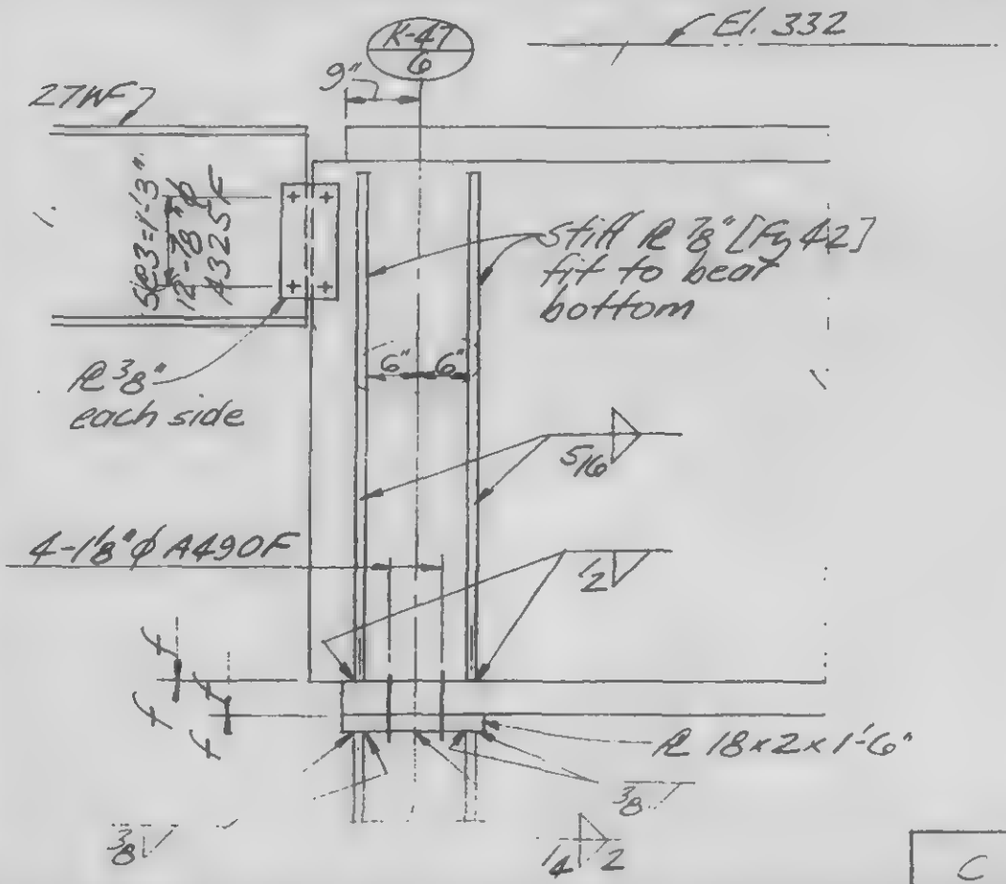

C

LICENSED PROFESSIONAL ENGINEER — LESLIE E. ROBERTSON — No 34360 — UNIVERSITY OF THE STATE OF NEW YORK

DESIGNED

DRAWN

REVIEWED

13-K4.3-3

SKILLING, HELLE, CHRISTIANSEN, ROBERTSON — Structural & Civil Engineers

PROJECT: THE WORLD TRADE CENTER

TITLE: BALLROOM GIRDER END CONNECTION

DATE: 11-3-72

REVISIONS

RELEASED FOR CONSTRUCTION 11-20-72

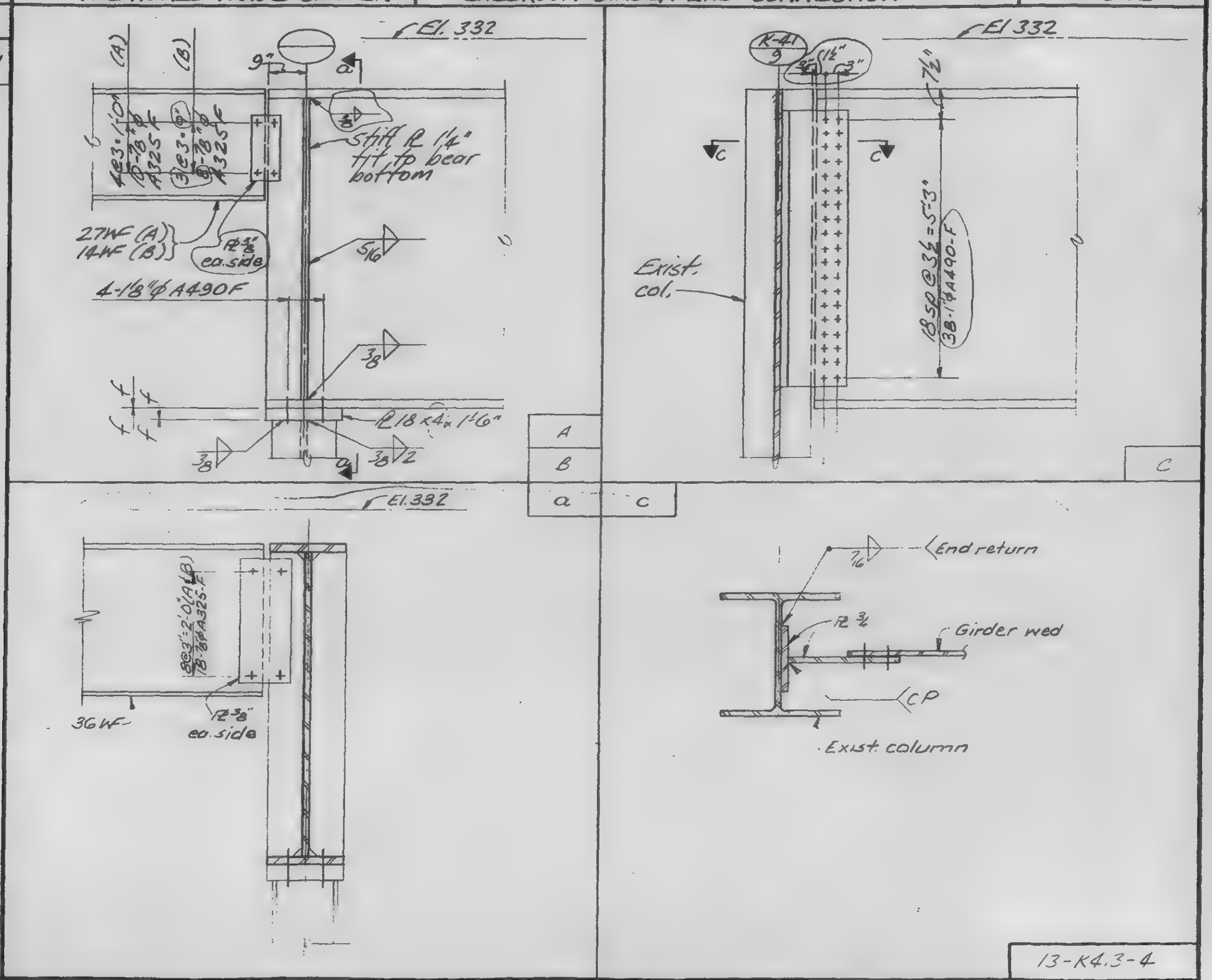

LICENSED PROFESSIONAL ENGINEER
LESLIE E. ROBERTSON
No 34360
UNIVERSITY OF THE STATE OF NEW YORK

DESIGNED

DRAWN

REVIEWED

13-K4.3-4

SKILLING, HELLE, CHRISTIANSEN, ROBERTSON — Structural & Civil Engineers

PROJECT THE WORLD TRADE CENTER

TITLE CONNECTIONS AT COLUMN

DATE 11-3-72

REVISIONS

Released for construction 11-24-72

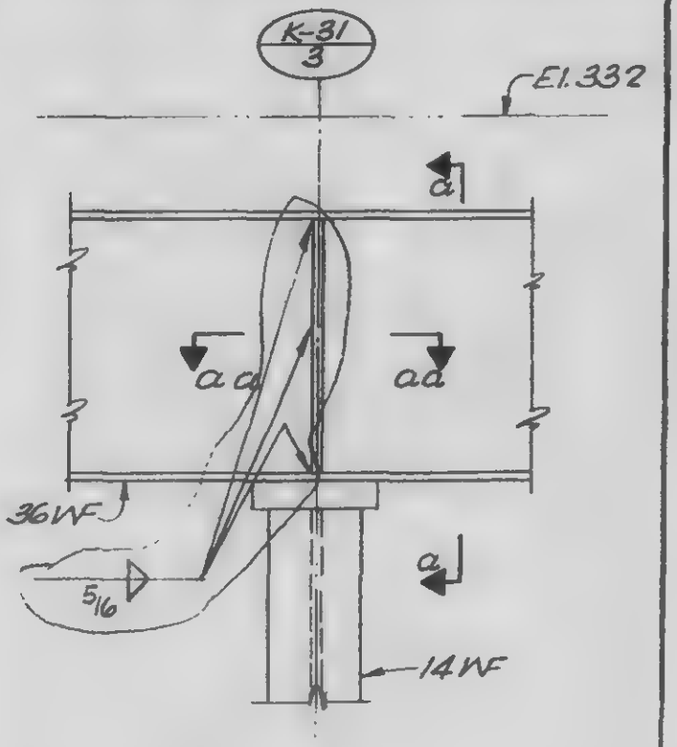

A

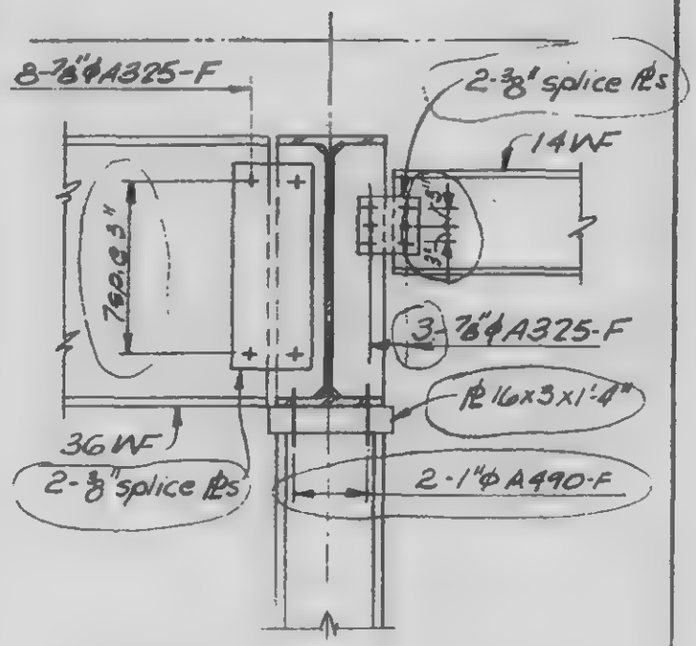

a a-a

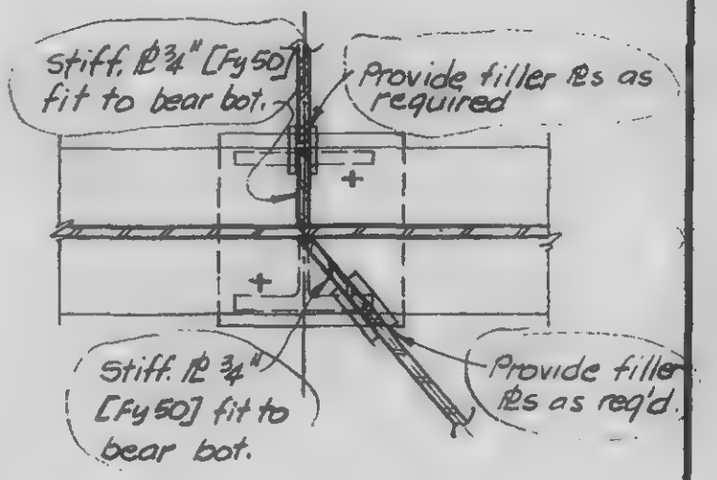

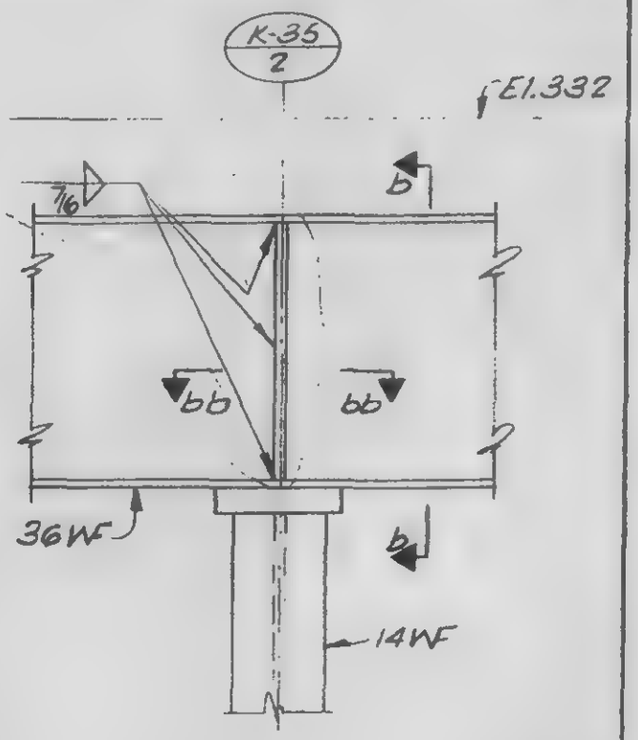

B

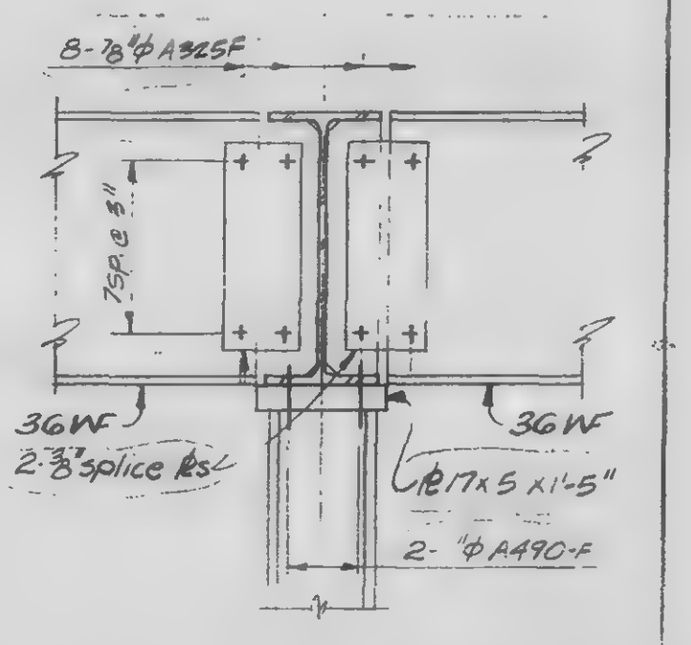

C CC

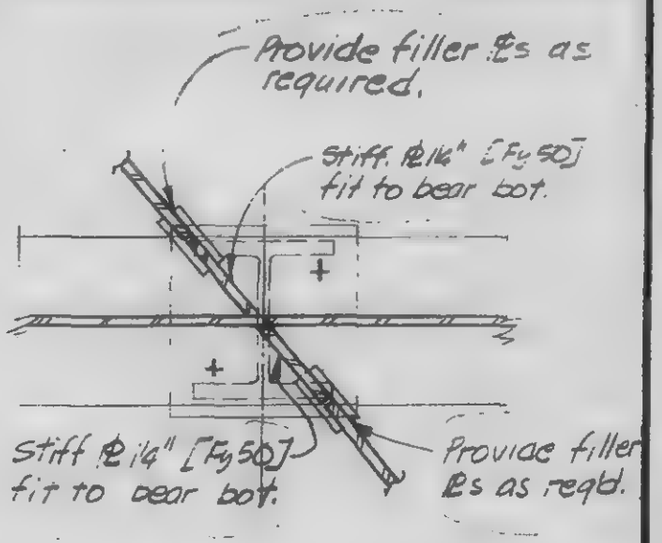

B

13-K5.1-1

LICENSED PROFESSIONAL ENGINEER — LESLIE E. ROBERTSON — No. 34380 — UNIVERSITY OF THE STATE OF NEW YORK

DESIGNED WAB

DRAWN TR

REVIEWED

SKILLING, HELLE, CHRISTIANSEN, ROBERTSON — Structural & Civil Engineers

PROJECT THE WORLD TRADE CENTER

TITLE CONNECTIONS AT COLUMN

DATE 11-3-72

REVISIONS

Released for construction 11-24-72

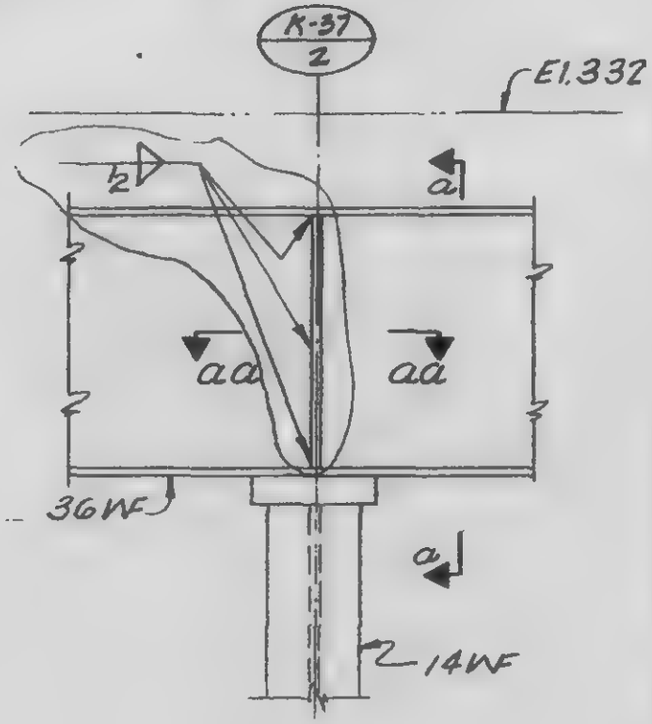

A

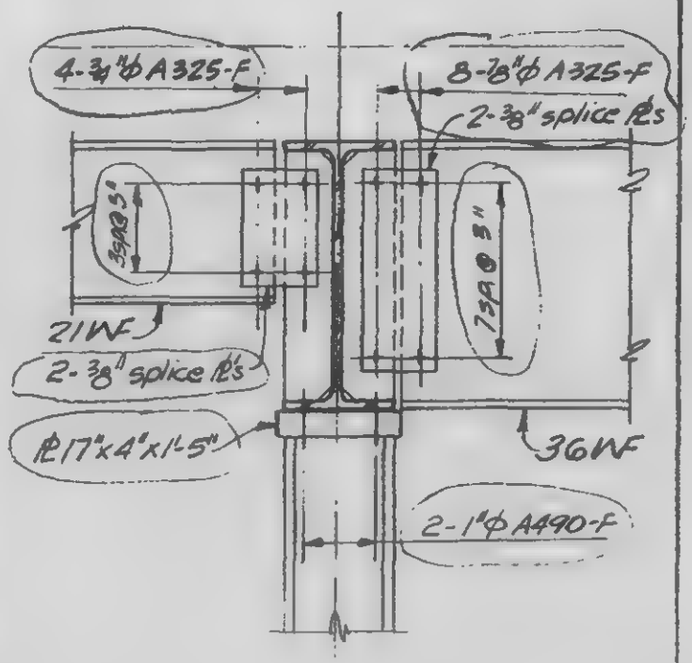

a | aa

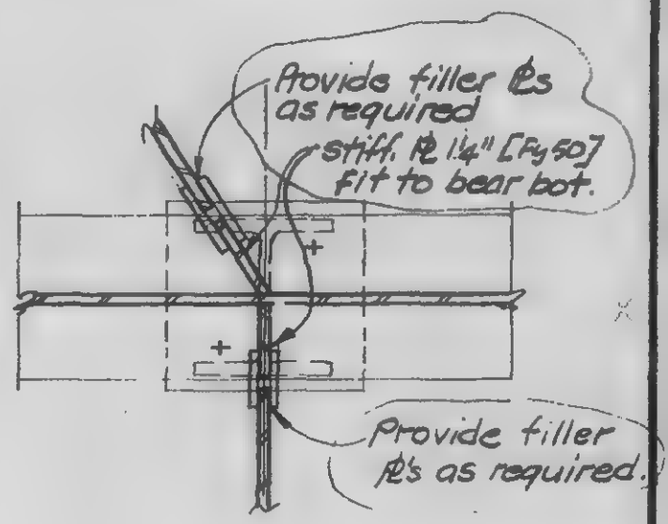

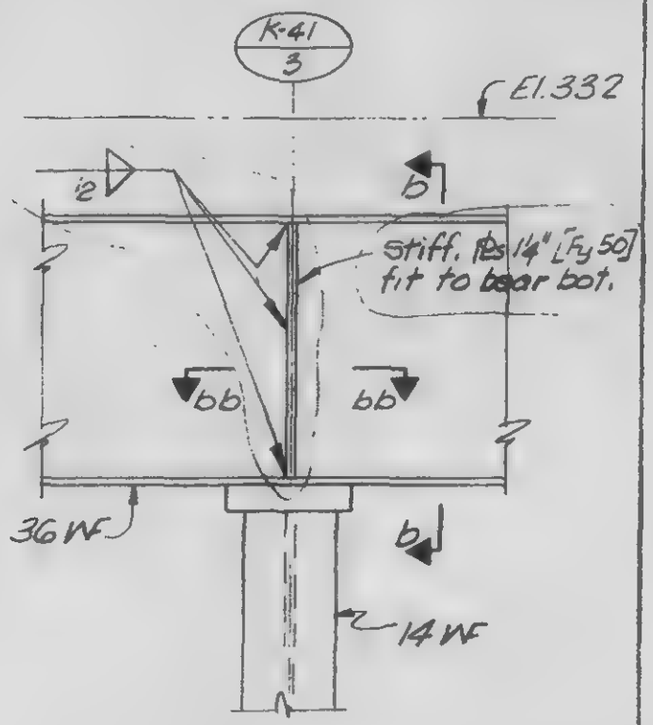

B

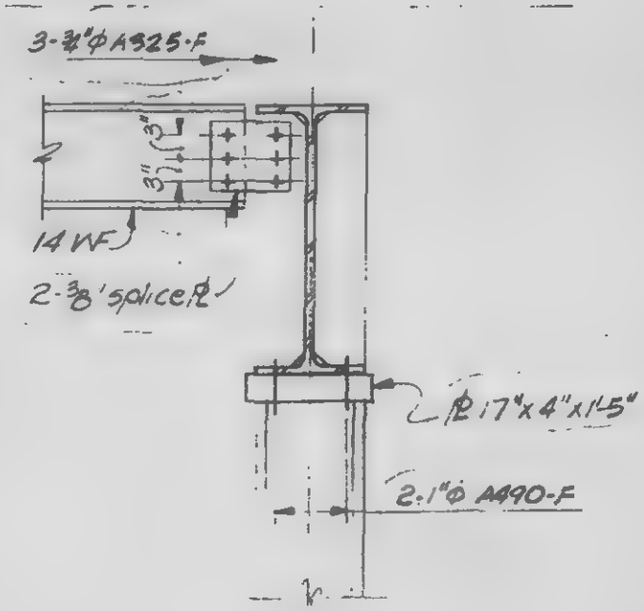

c | cc

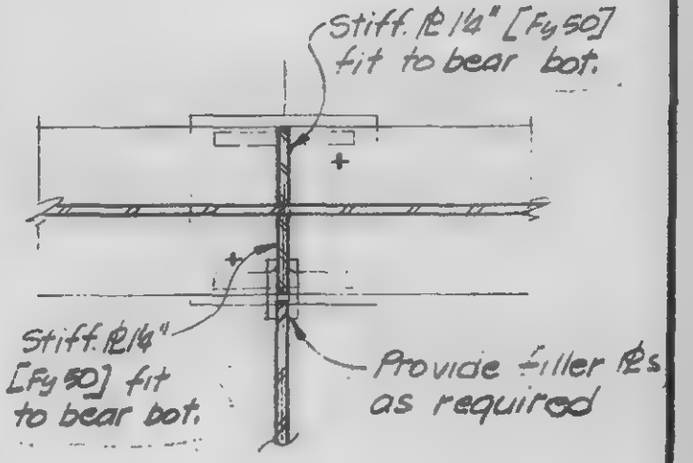

LICENSED PROFESSIONAL ENGINEER — LESLIE E. ROBERTSON — No. 34360 — UNIVERSITY OF THE STATE OF NEW YORK

DESIGNED WAB

DRAWN TR

CHECKED

13-K5.1-2

SKILLING, HELLE, CHRISTIANSEN, ROBERTSON — Structural & Civil Engineers

PROJECT: THE WORLD TRADE CENTER | TITLE: CONNECTION DETAIL AT CANTILEVER | DATE: 11-3-72

REVISIONS

Released for construction 11-24-72

4-20-73

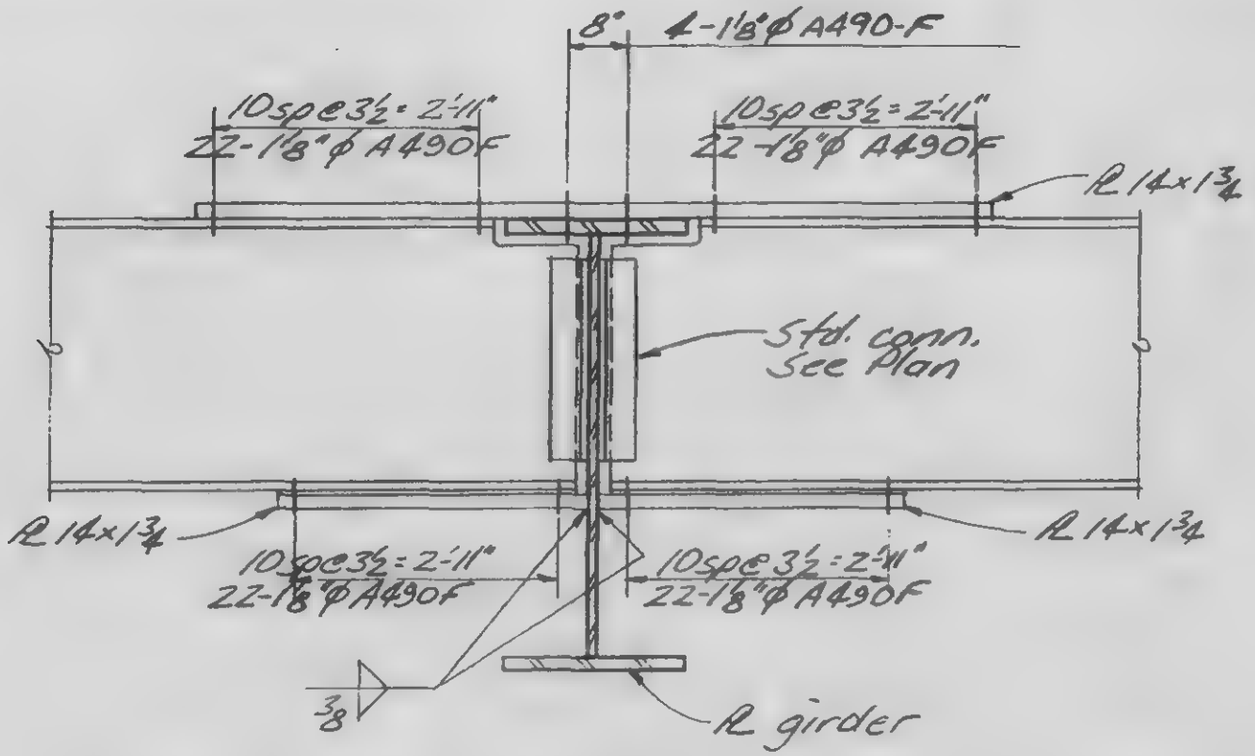

A

B

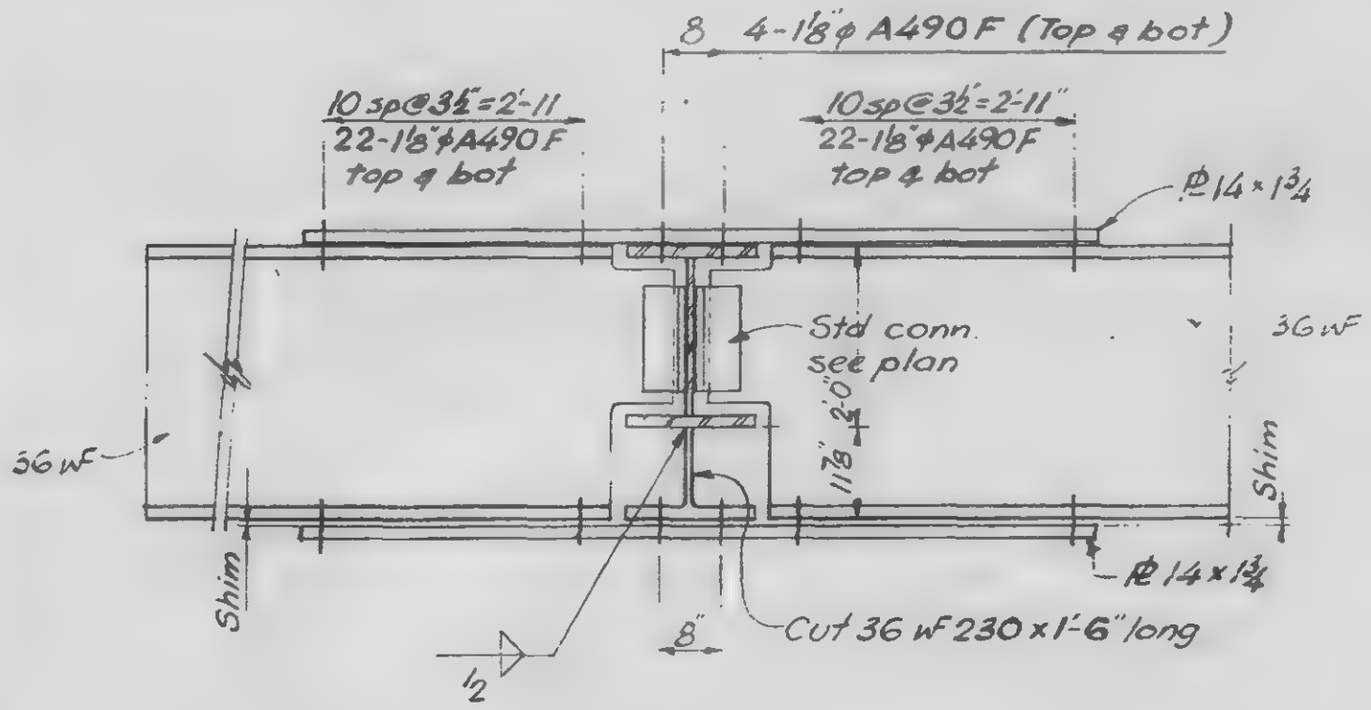

LICENSED PROFESSIONAL ENGINEER — LESLIE E. ROBERTSON — No. 34360 — UNIVERSITY OF THE STATE OF NEW YORK

DESIGNED: K. Chiang

DRAWN:

REVIEWED:

13-K5.2-1

SCALE

REVISIONS

Released for construction 1-24-72

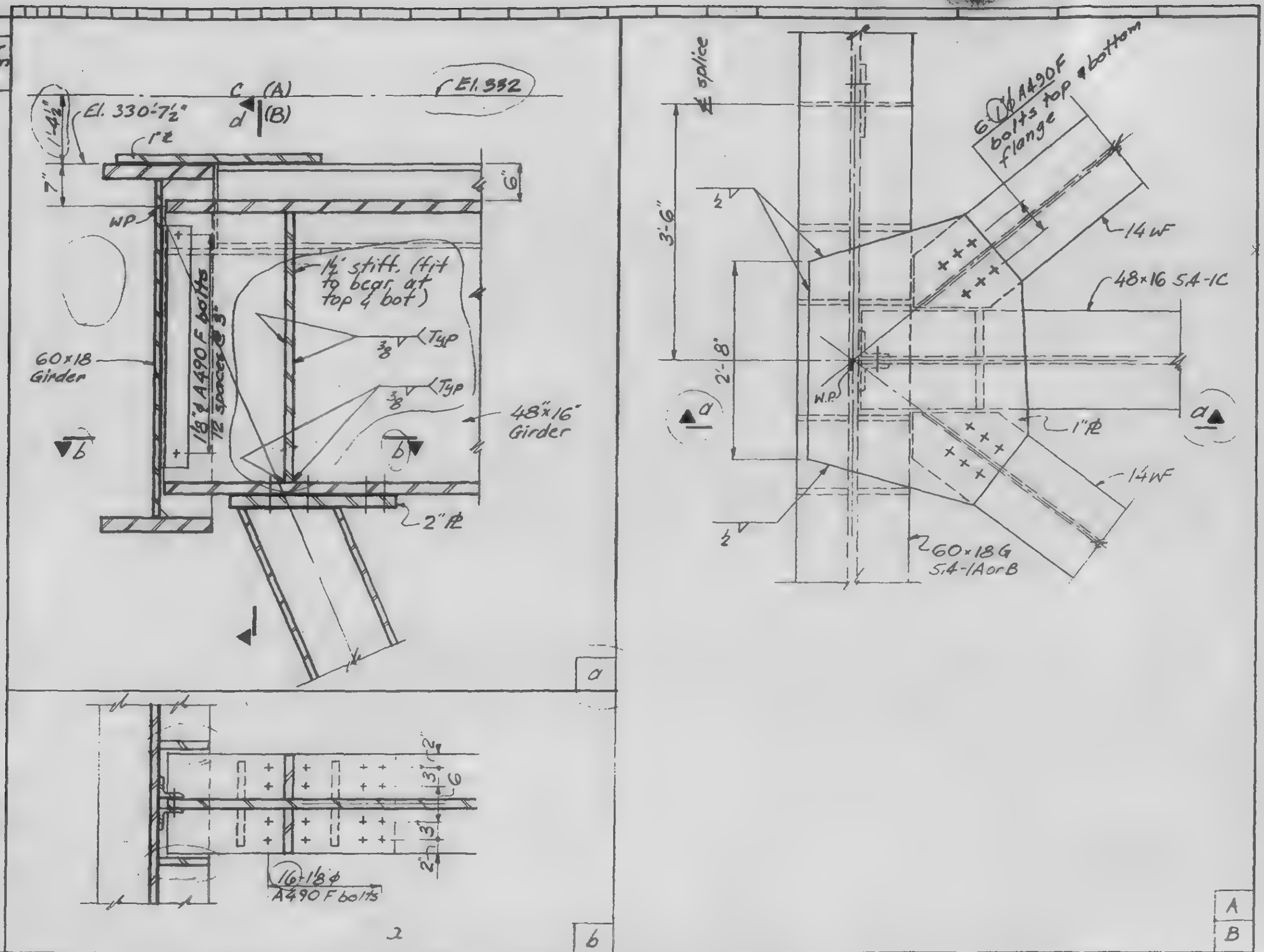

DESIGNED	PROJECT THE WORLD TRADE CENTER	TITLE CONNECTION DETAILS AT CANOPY	DATE 11-3-72
DRAWN JG	SKILLING, HELLE, CHRISTIANSEN, ROBERTSON	Structural & Civil Engineers	DWG NO 13-K5.3-1.1
REVIEWED			

SCALE

REVISIONS

Released for construction 11-24-72

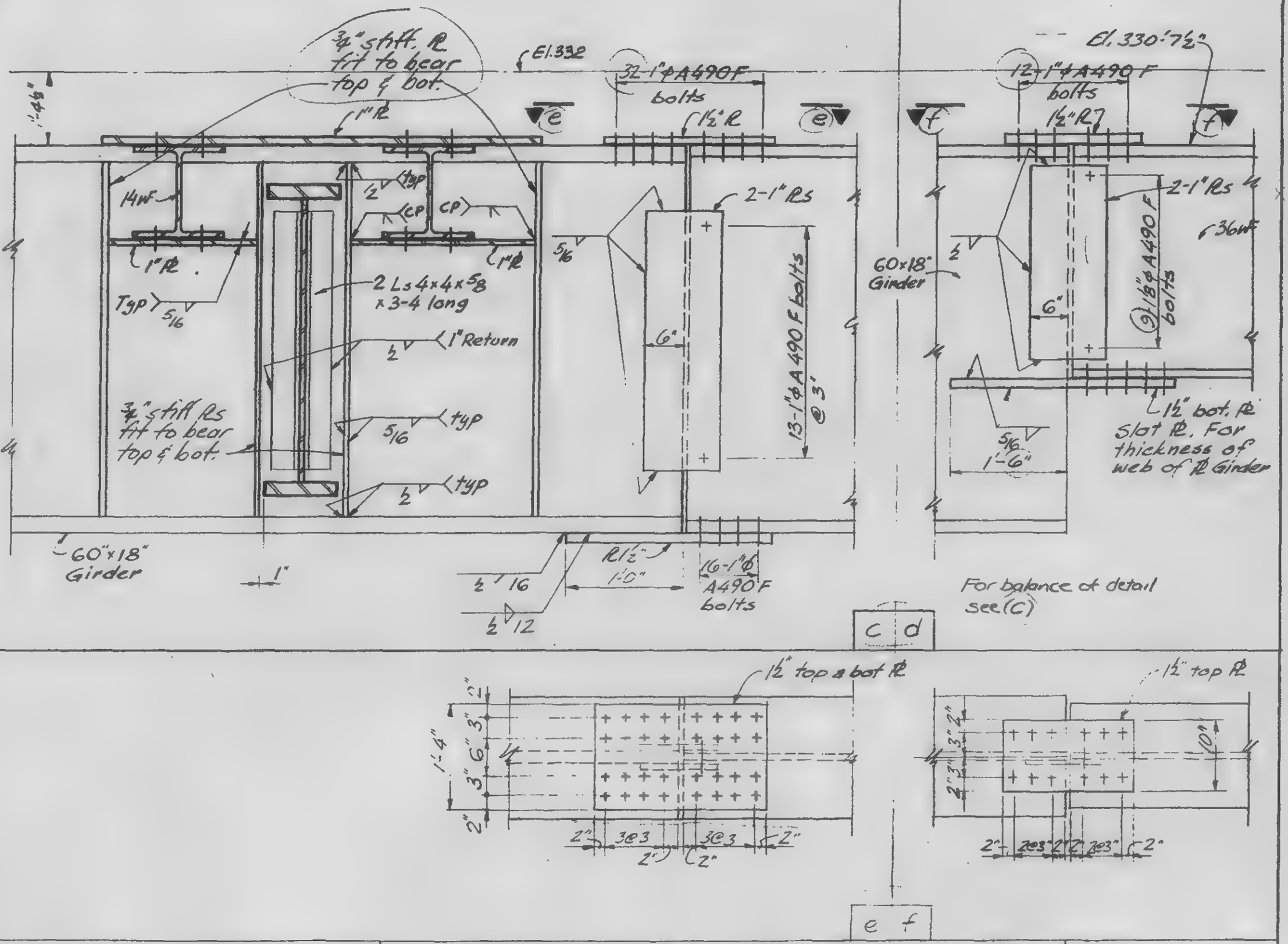

PROJECT THE WORLD TRADE CENTER

TITLE CONNECTION DETAILS AT CANOPY

DATE 11-3-72

DRAWN JG

SKILLING, HELLE, CHRISTIANSEN, ROBERTSON Structural & Civil Engineers

DWG NO. 13-K53-1.2

SPILLING
[illegible] LEVINSON
Structural & Civil Engineers

PROJECT WTC 220.CO

Repair Detail, Modification of Channels to Clear Exist. Beam

DAT. 6 February [illegible]

PREPARED BY

APPROVED

REVISIO

El 310
Zone K-3

1. Refer to Drawing 13-K5.3-1.3 for details not shown.
2. Refer to Levinson Shop Drawing No. V3231

14 WF 202

Remove this portion of channels. Reweld portion removed as shown.

Note 1 3/8 V S

A

14 WF 455 Column

Note 1 3/8 V S

A

Note 1--For each shear connector on the portion of channel which is removed and re-welded, use 3/8" fillet weld 3" long.

Existing Pl. Girder

Typical at two locations---
Columns K-45/2 and K-47/2

Note 1 3/8 V S

Note 1 3/8 V S Note 1

Note 1 3/8 V S

Note 1 3/8 V S Note 1

SECTION A-A

Engineers

T CANOPY

DATE 2-5-73

1'-7"

1'-4¾"

Exist 14 WF col.

New 14 WF col.

(H)

(G)

½

2 Stiff Pls 15"x2"x1'-10" (Fy=42)

Typ both channels

⅜

Exist. Pl Girder

13-K5.3-1.3

LICENSED PROFESSIONAL ENGINEER LESLIE E. ROBERTSON No 34[illegible] UNIVERSITY OF THE STATE

DESIGNED

SCALE

REVISIONS

Released for construction 11-24-72

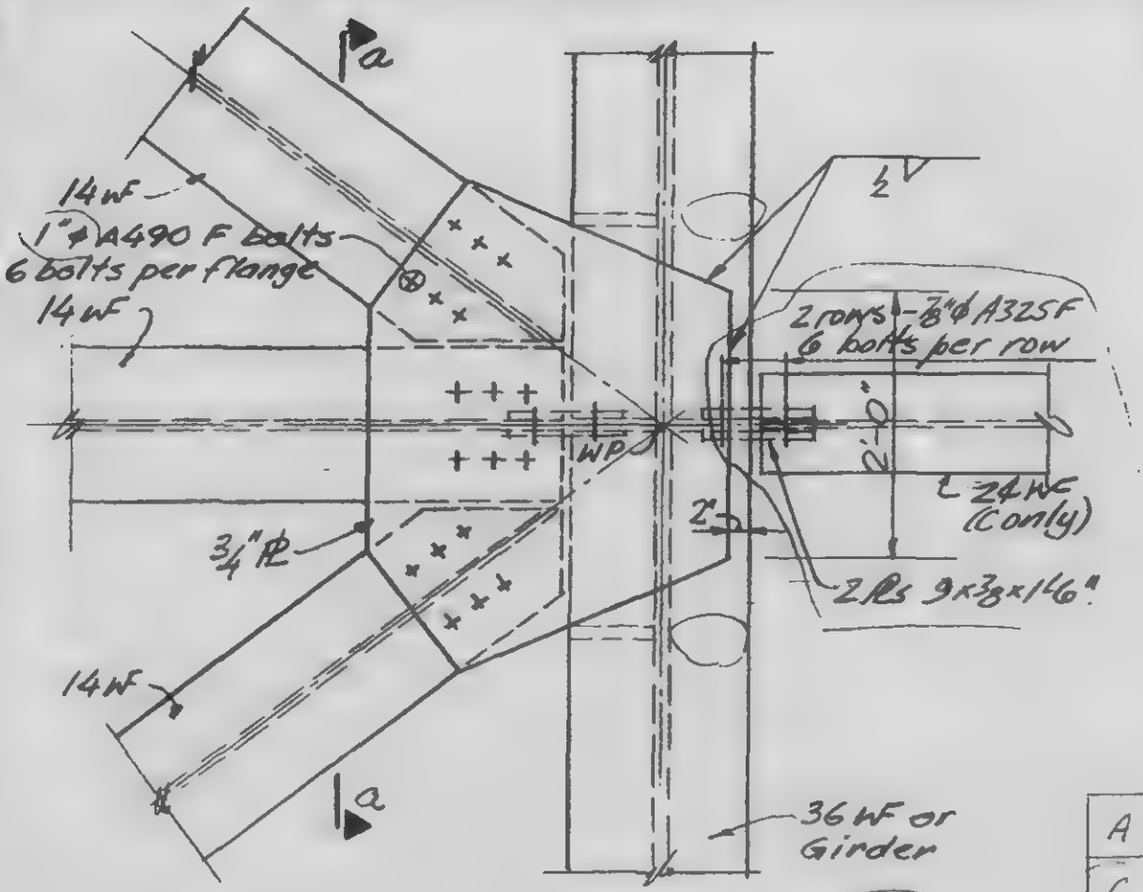

A

C

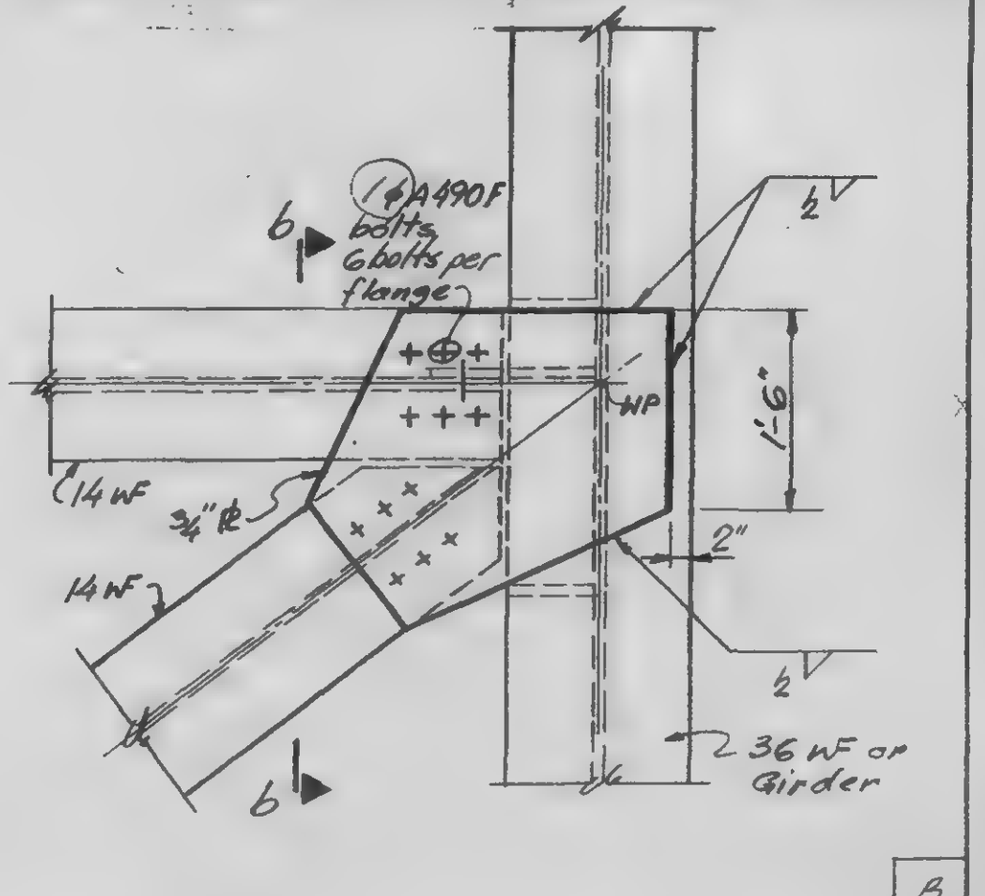

B

EL 332

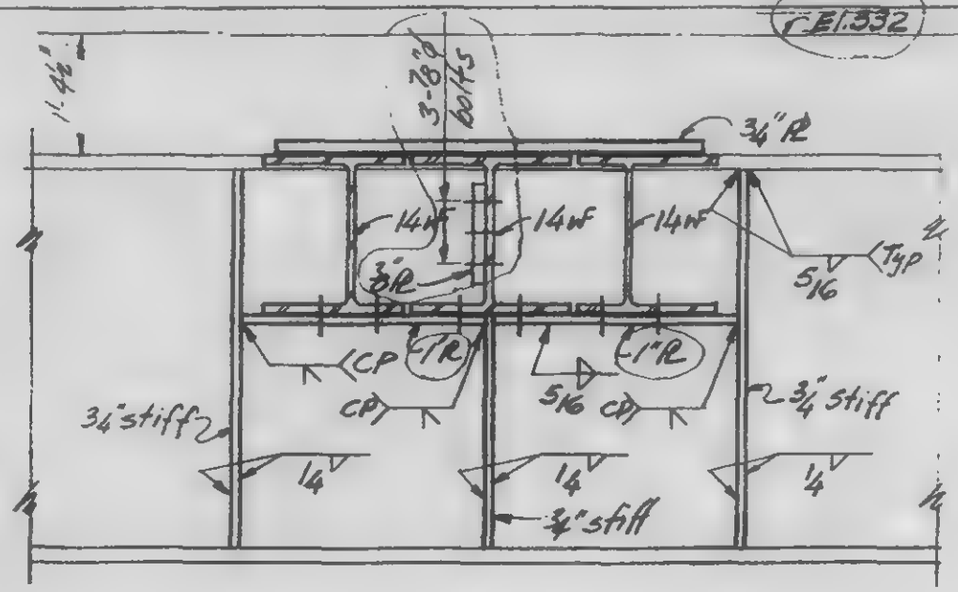

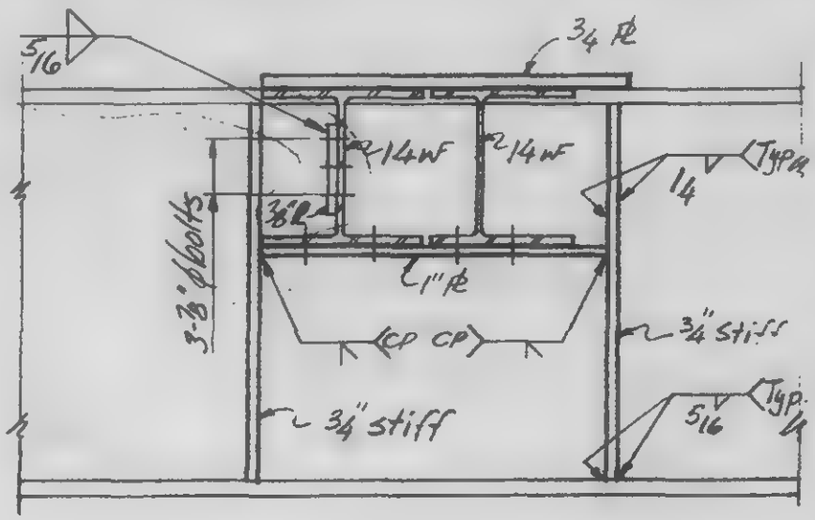

a

6

PROJECT THE WORLD TRADE CENTER

TITLE CONNECTION DETAILS AT CANOPY

DATE 11-3-72

DESIGNED

DRAWN JG

REVIEWED

SKILLING, HELLE, CHRISTIANSEN, ROBERTSON

Structural & Civil Engineers

DWG. NO 13-K5.3-2

SKILLING, HELLE, CHRISTIANSEN, ROBERTSON — Structural & Civil Engineers

PROJECT: THE WORLD TRADE CENTER | TITLE: CONNECTION DETAILS AT CANOPY | DATE: 11-24-72

REVISIONS

Released for construction 11-24-72

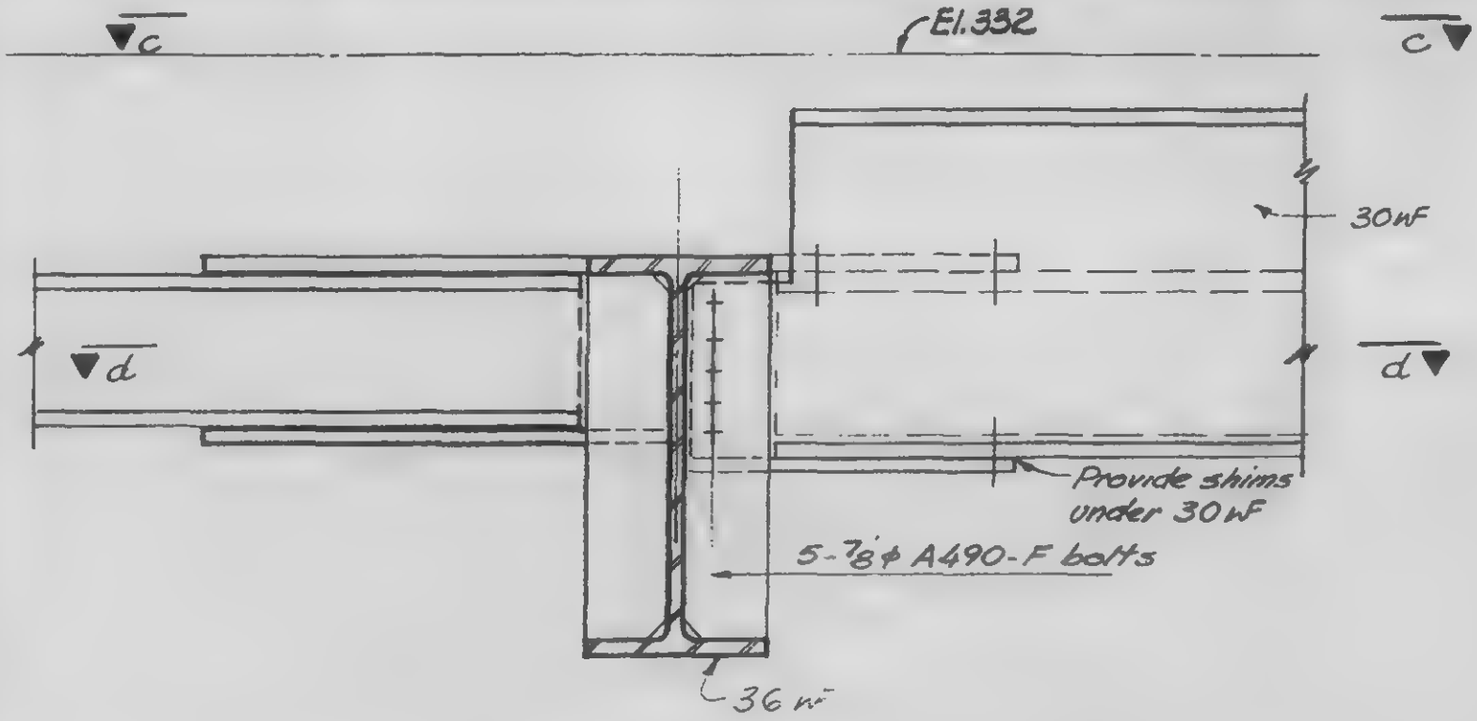

a

LICENSED PROFESSIONAL ENGINEER
LESLIE E. ROBERTSON
No. 34360
UNIVERSITY OF THE STATE OF NEW YORK

DESIGNED

DRAWN

REVIEWED

13-K5.3-2.1

SKILLING, HELLE, CHRISTIANSEN, ROBERTSON — Structural & Civil Engineers

PROJECT THE WORLD TRADE CENTER | TITLE CONNECTION DETAIL AT CANOPY | DATE 11-24-72

REVISIONS

Released for construction 11-24-72

4-20-73

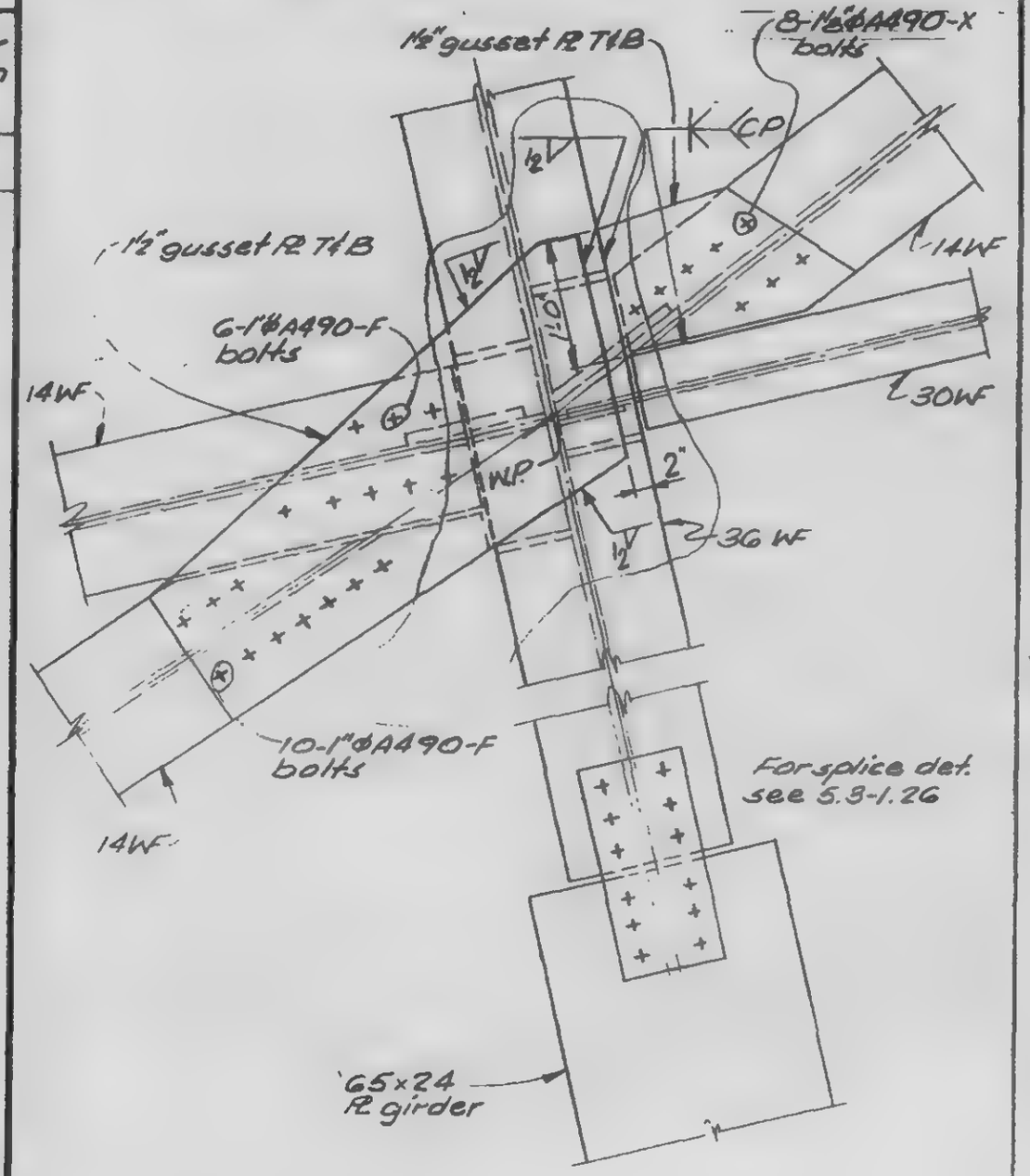

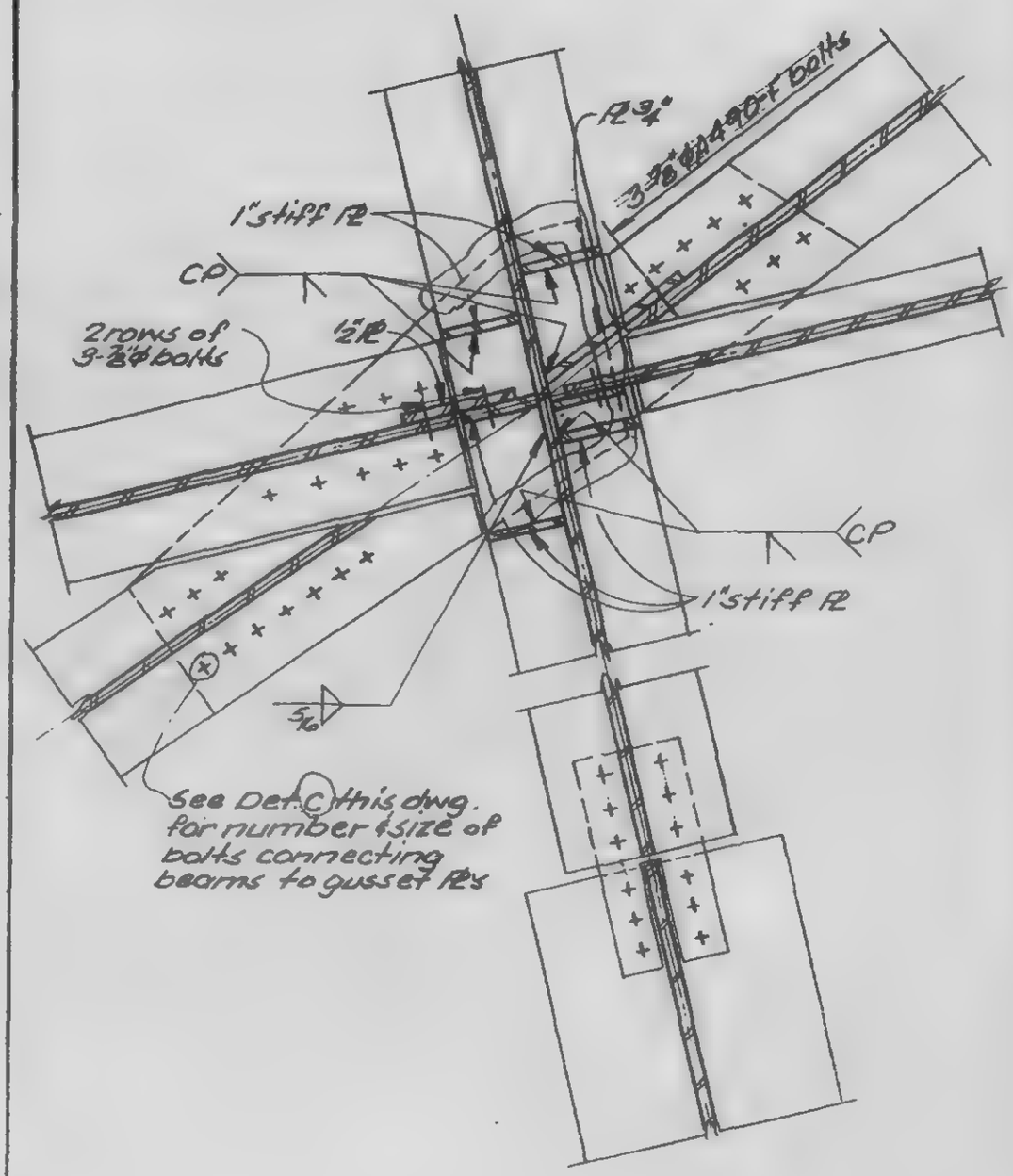

LICENSED PROFESSIONAL ENGINEER — LESLIE E. ROBERTSON — No. 34360 — UNIVERSITY OF THE STATE OF NEW YORK

DRAWN T.R.

c | d

13-K5.3-3.2

SKILLING, HELLE, CHRISTIANSEN, ROBERTSON — Structural & Civil Engineers

PROJECT: THE WORLD TRADE CENTER | TITLE: CONNECTION DETAILS AT CANOPY | DATE: 11-24-72

REVISIONS

Released for construction 11-24-72

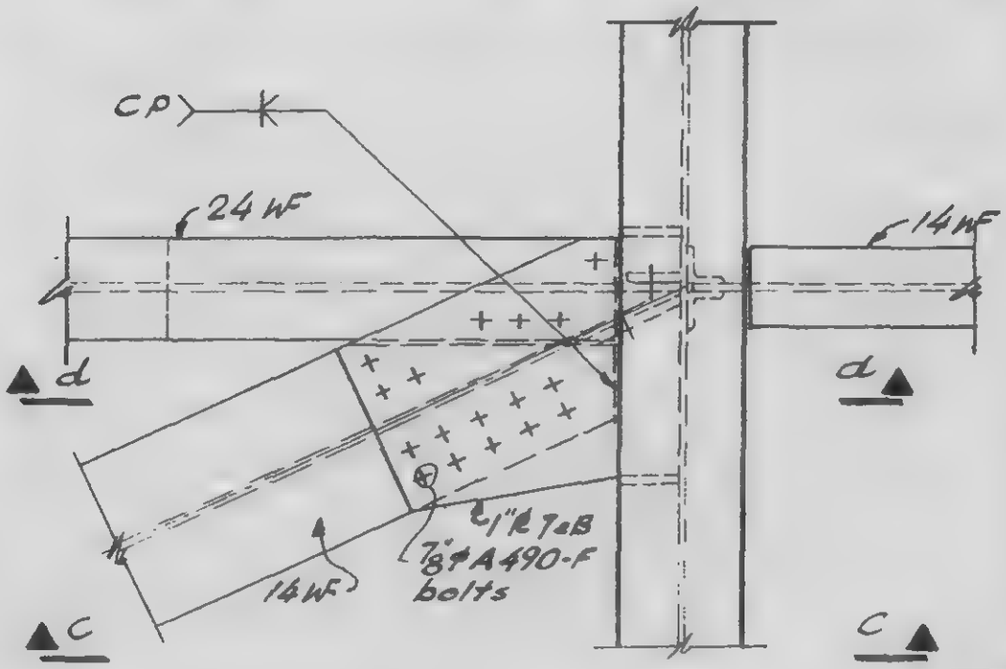

a c

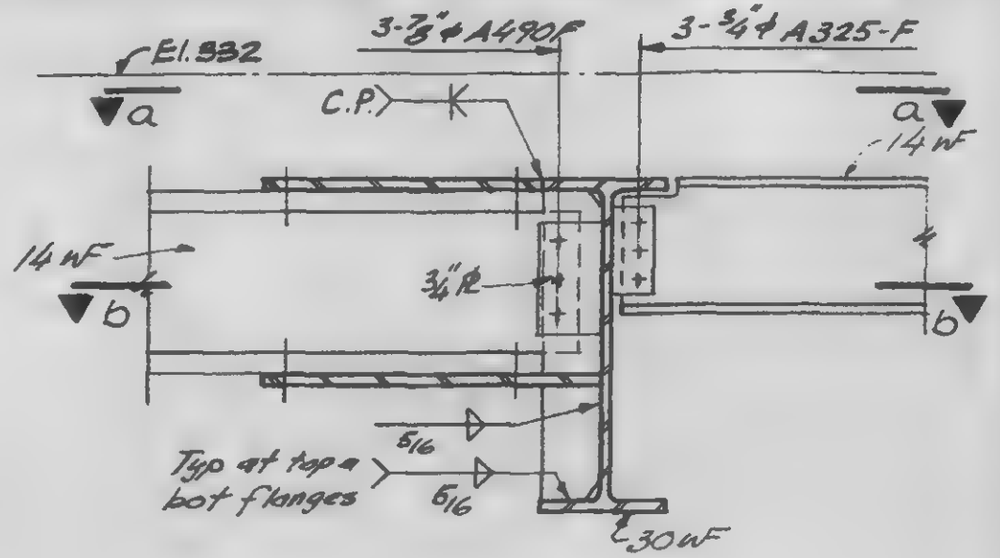

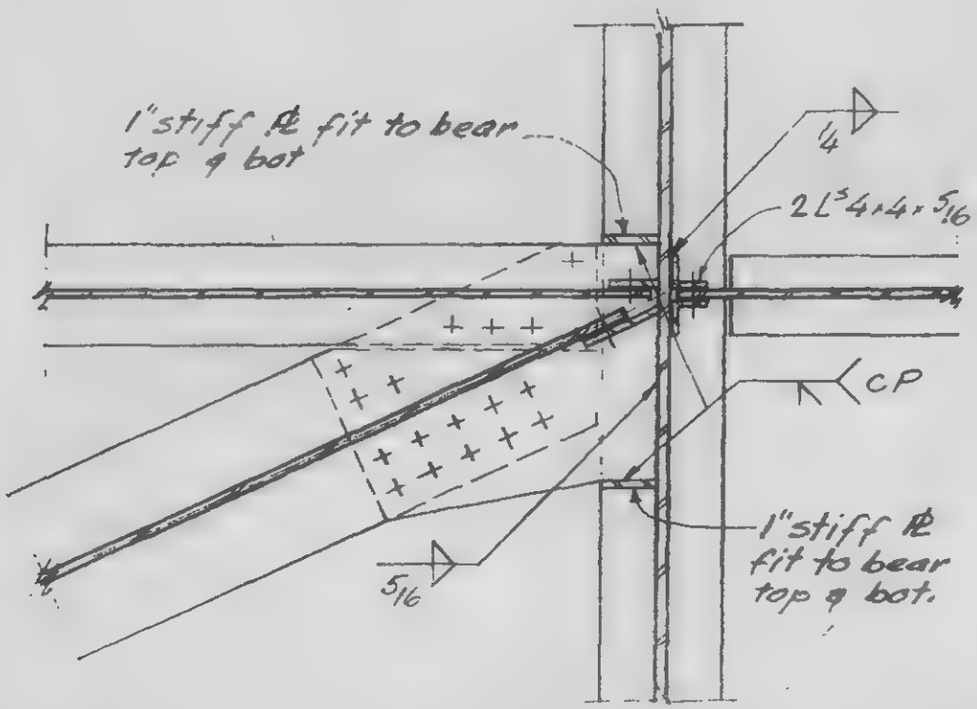

c d

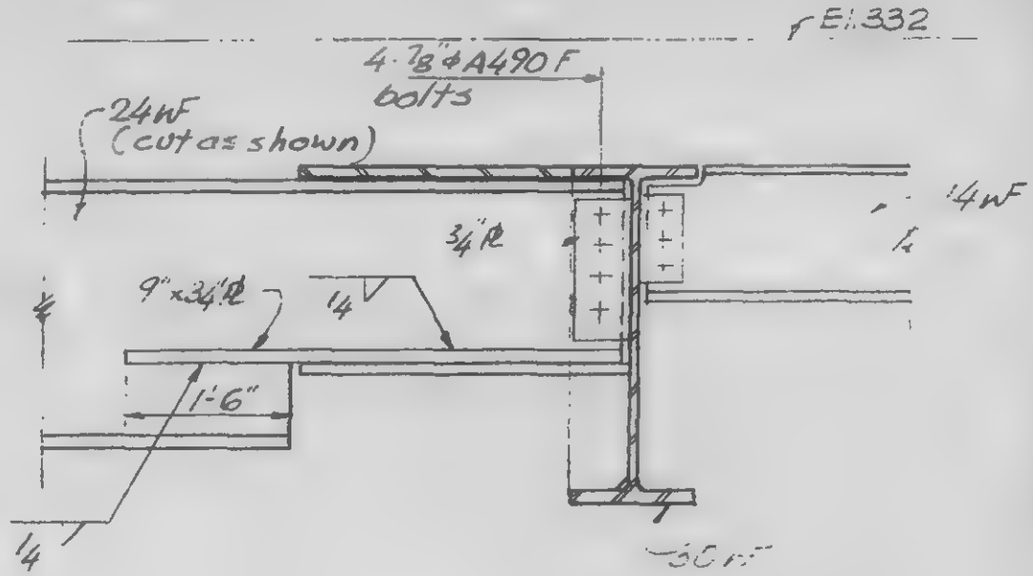

DESIGNED

DRAWN

REVIEWED

LICENSED PROFESSIONAL ENGINEER — LESLIE E. ROBERTSON — No 34360 — UNIVERSITY OF THE STATE OF NEW YORK

13-K5.3-4

SKILLING, HELLE, CHRISTIANSEN, ROBERTSON — Structural & Civil

PROJECT: THE WORLD TRADE CENTER | TITLE: CONNECTION DETAILS AT CANOPY | DATE: 11-24-72

REVISIONS

Released for construction 11-24-72

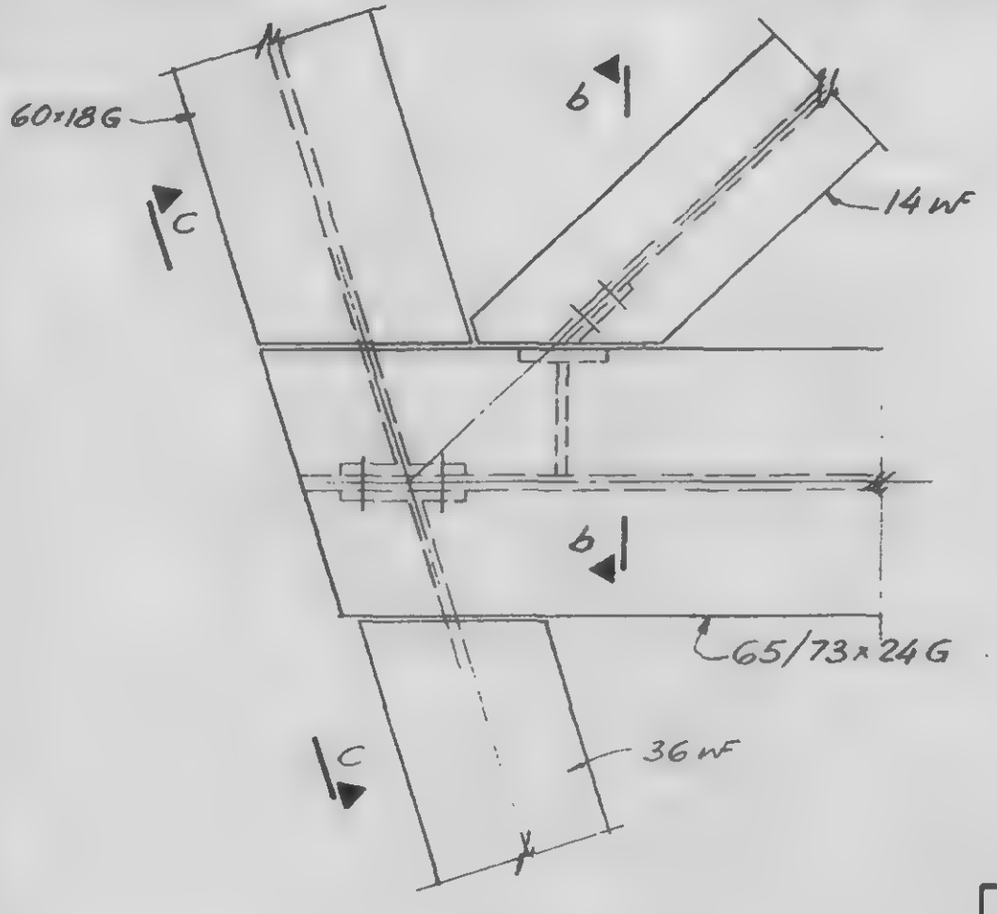

a

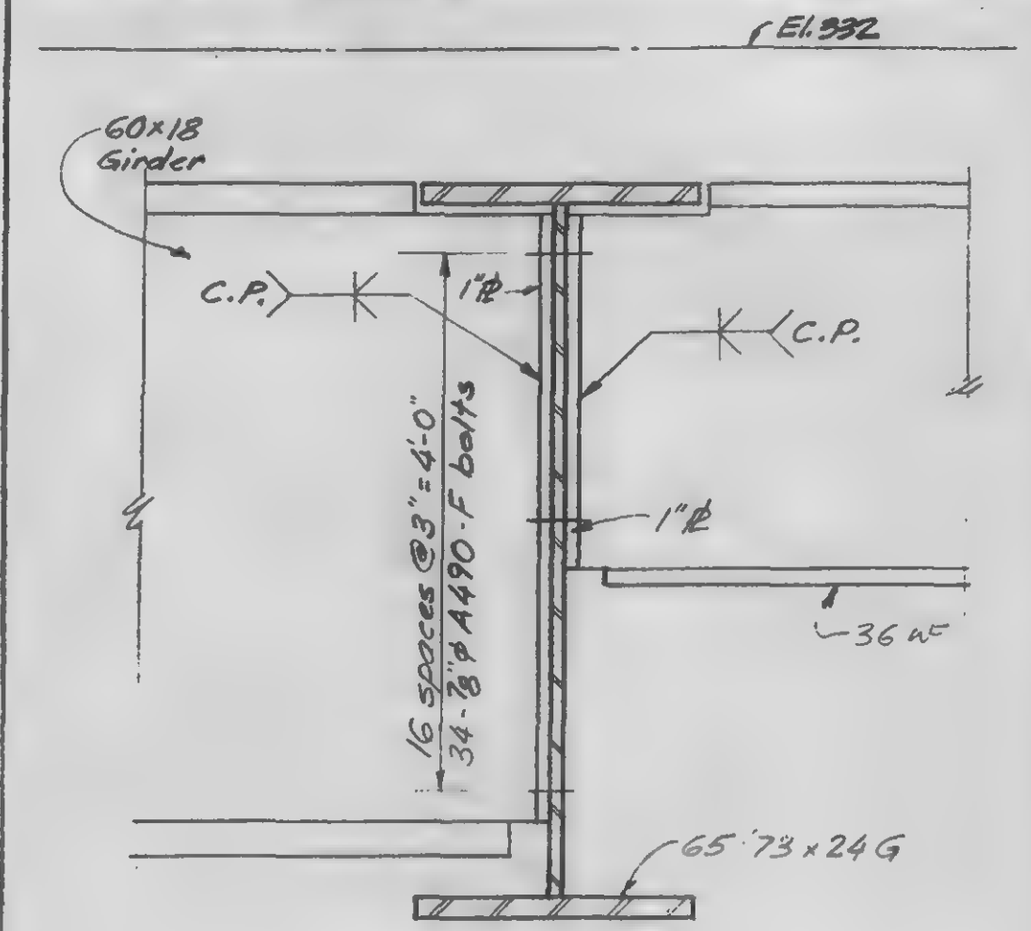

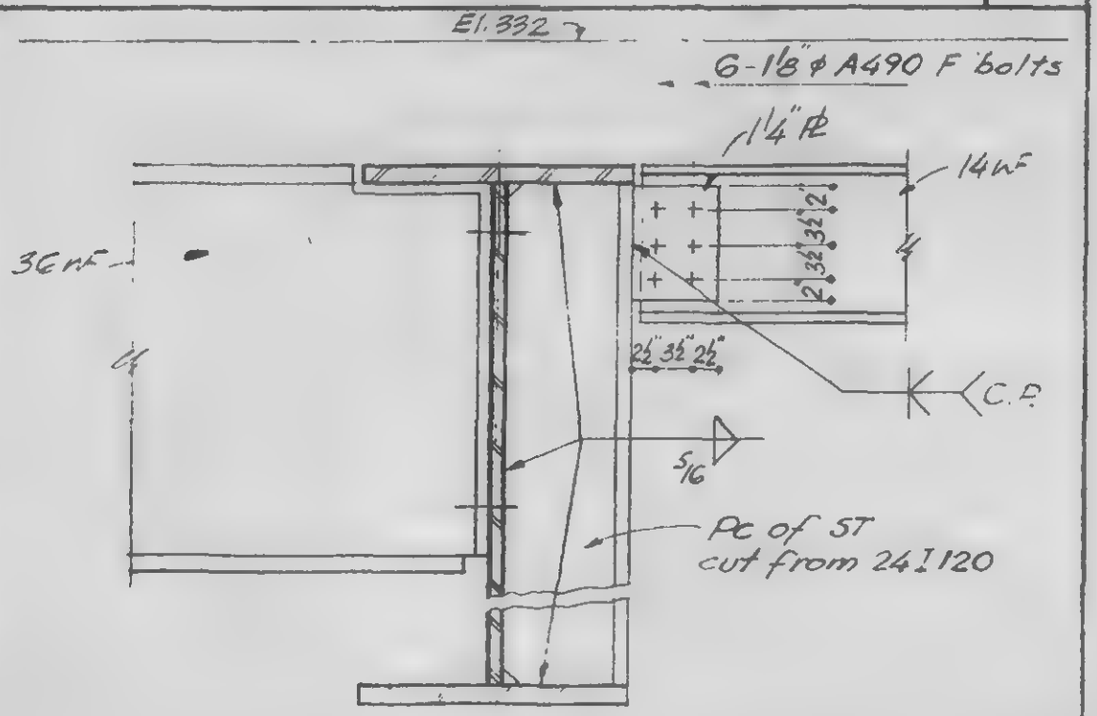

b | c

LICENSED PROFESSIONAL ENGINEER — LESLIE E. ROBERTSON — No 34380 — UNIVERSITY OF THE STATE OF NEW YORK

DESIGNED

DRAWN

REVIEWED

13-K5.3-5

SKILLING, HELLE, CHRISTIANSEN, ROBERTSON — Structural & Civil Engineers

PROJECT THE WORLD TRADE CENTER | TITLE CONNECTION DETAILS AT CANOPY | DATE 11-24-72

REVISIONS

Released for construction 11-24-72

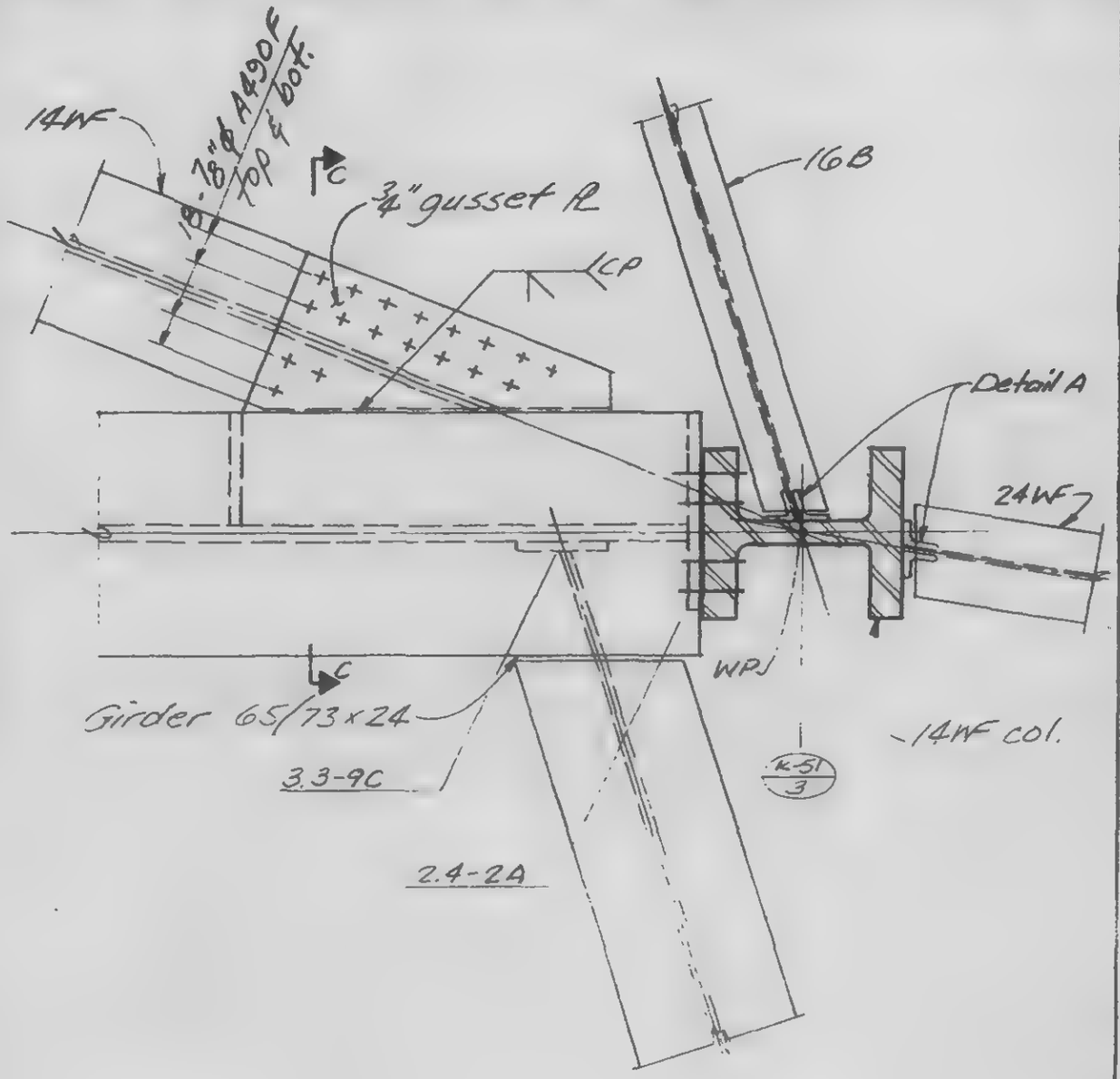

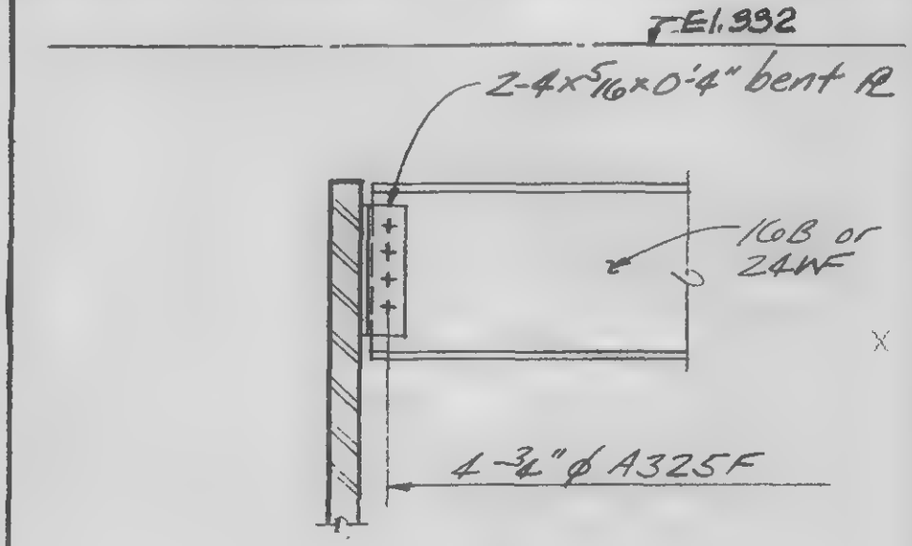

Detail A

b

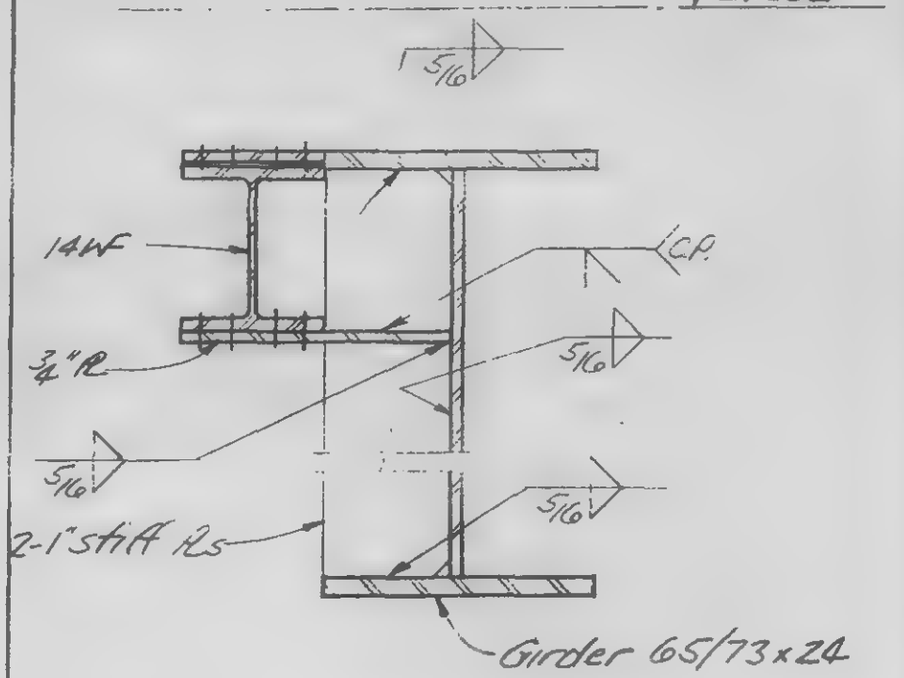

LICENSED PROFESSIONAL ENGINEER — LESLIE E. ROBERTSON — No 34360 — UNIVERSITY OF THE STATE OF NEW YORK

DESIGNED

DRAWN

REVIEWED

a c

13-K5.3-6

SKILLING, HELLE, CHRISTIANSEN, ROBERTSON — Structural & Civil Engineers

PROJECT THE WORLD TRADE CENTER | TITLE CONNECTION DETAILS AT CANOPY | DATE 11-24-72

REVISIONS

Released for construction 11-24-72

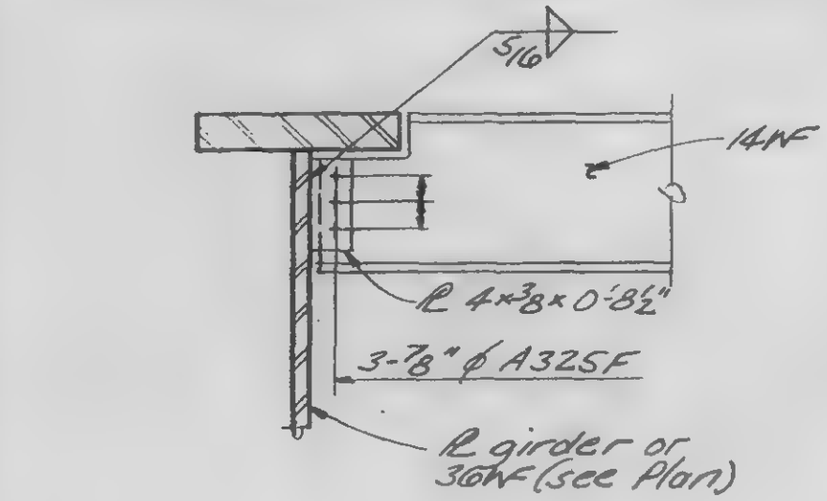

A

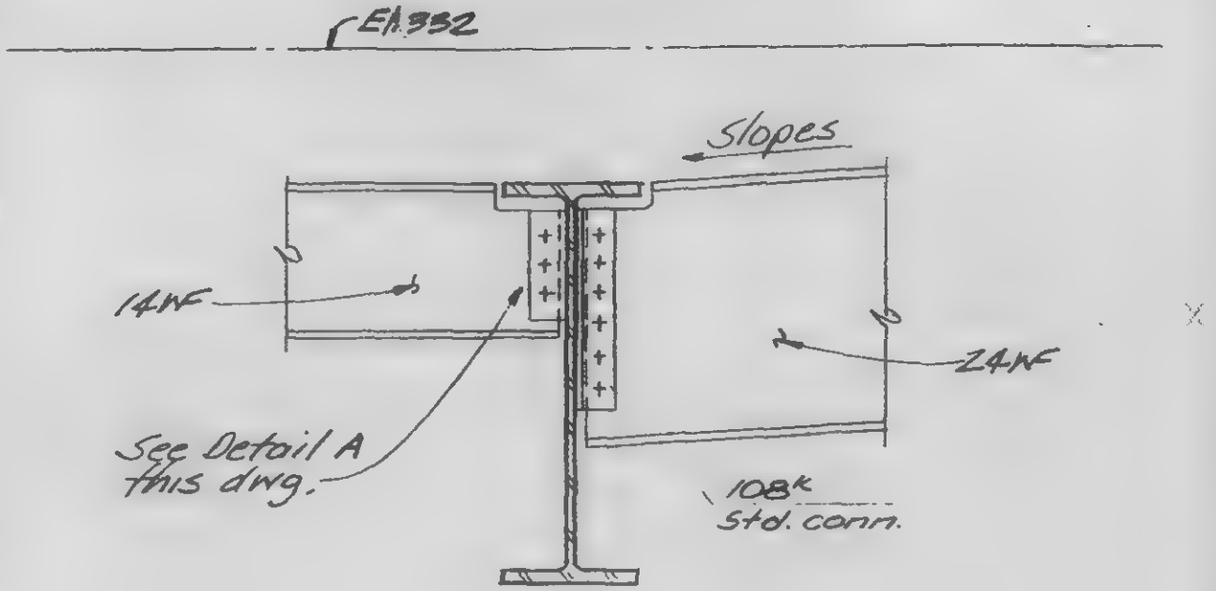

B

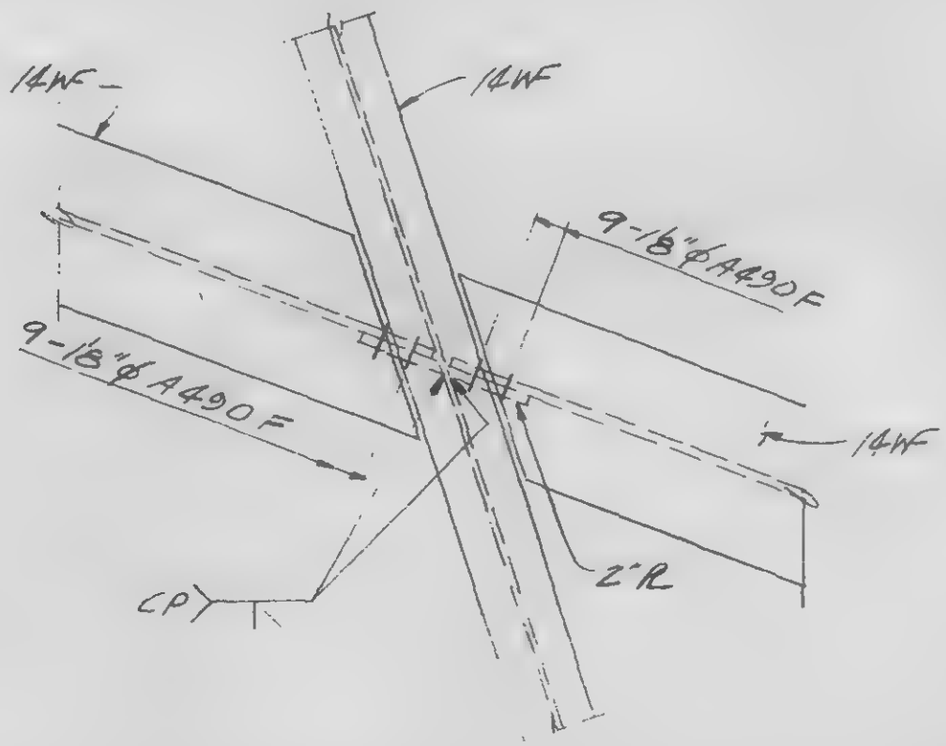

C

LICENSED PROFESSIONAL ENGINEER
LESLIE E. ROBERTSON
No 34360
UNIVERSITY OF THE STATE OF NEW YORK

DESIGNED

DRAWN

REVIEWED

13-K5.3-7

SKILLING, HELLE, CHRISTIANSEN, ROBERTSON — Structural & Civil Engineers

PROJECT THE WORLD TRADE CENTER | TITLE GIRDER DETAILS AT CANOPY | DATE 11-3-72

REVISIONS

released for construction 11-24-72

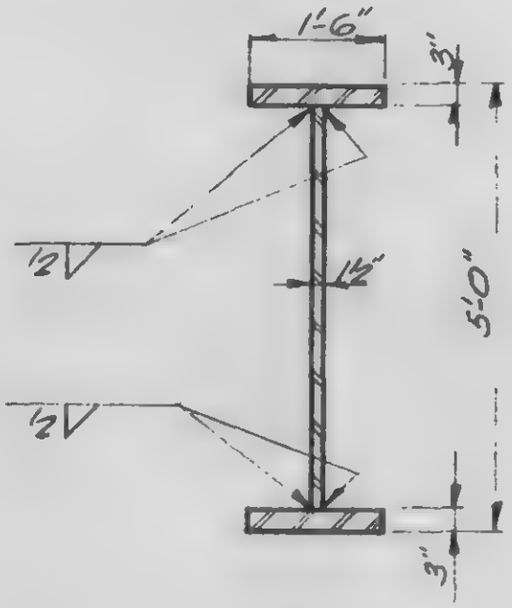

A

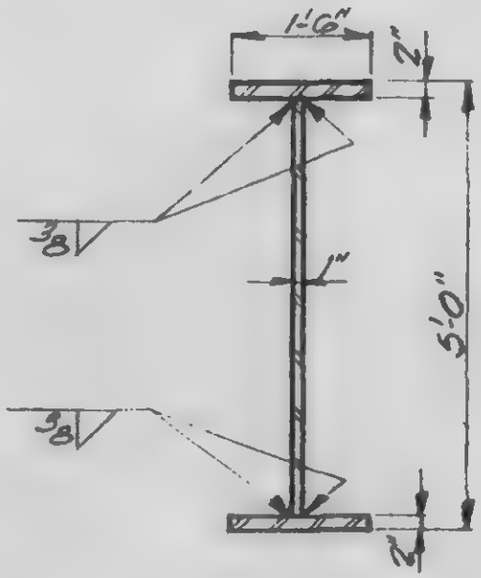

B

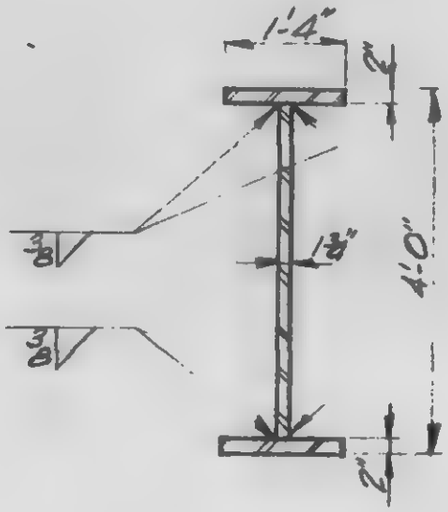

5.4-1

C

13-K5.4-1

LICENSED PROFESSIONAL ENGINEER LESLIE E. ROBERTSON No. 34360 UNIVERSITY OF THE STATE OF NEW YORK

SIGNED

DRAWN TR

REVIEWED

SKILLING, HELLE, CHRISTIANSEN, ROBERTSON — Structural & Civil Engineers

PROJECT THE WORLD TRADE CENTER | TITLE CONNECTIONS FOR FUTURE CONOPY | DATE 11-3-72

REVISIONS

Released for construction 11-24-72

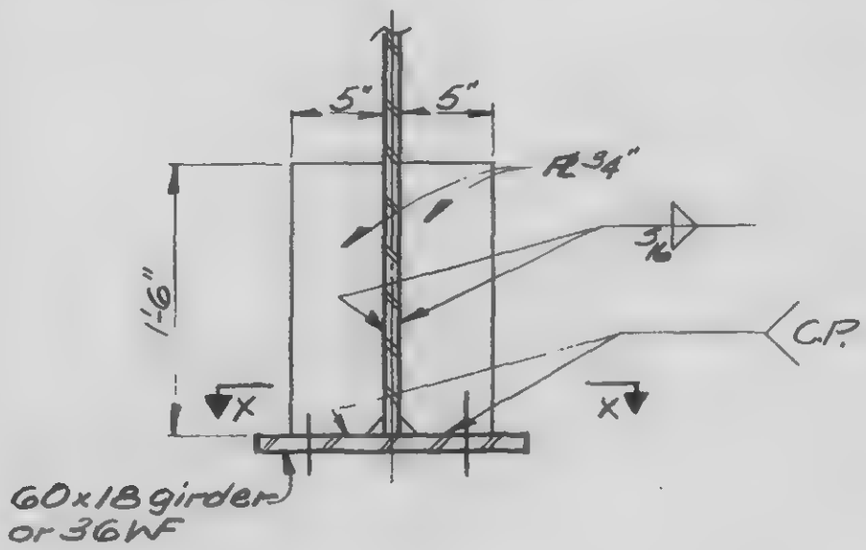

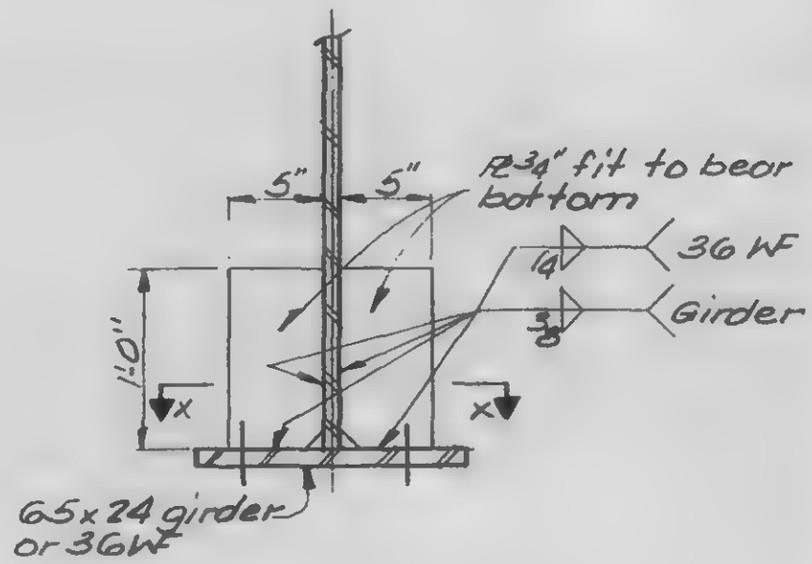

A B

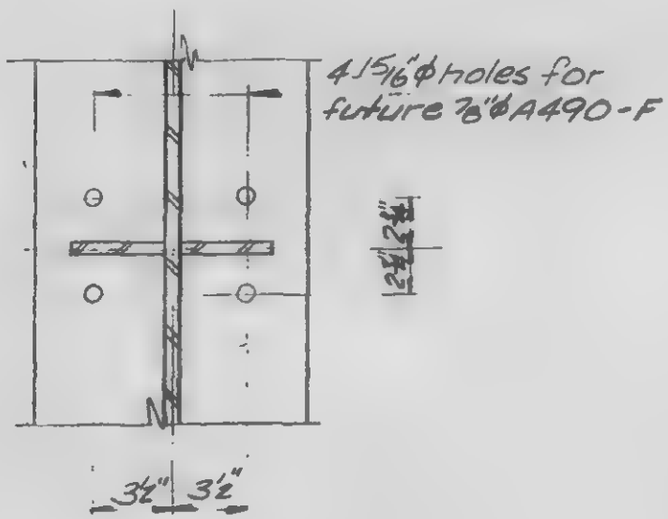

LICENSED PROFESSIONAL ENGINEER LESLIE E. ROBERTSON No 34360 UNIVERSITY OF THE STATE OF NEW YORK

DESIGNED

DRAWN TR

REVIEWED

1

13-K5.5-1

SKILLING, HELLE, CHRISTIANSEN, ROBERTSON — Structural & Civil Engineers

PROJECT THE WORLD TRADE CENTER | TITLE SLIDE CONNECTIONS TOWER B | DATE 11-3-72

REVISIONS

Released for construction 11-20-72

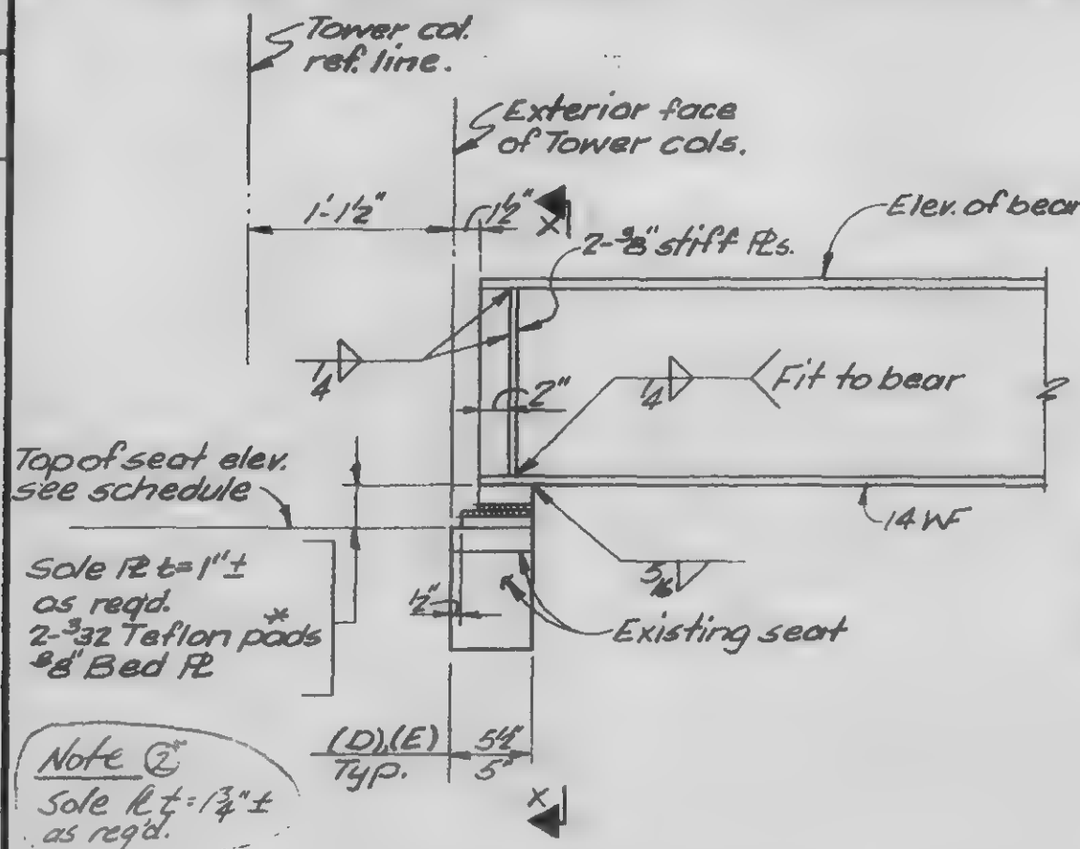

* Teflon pads to have a bearing capacity of 2000 psi.

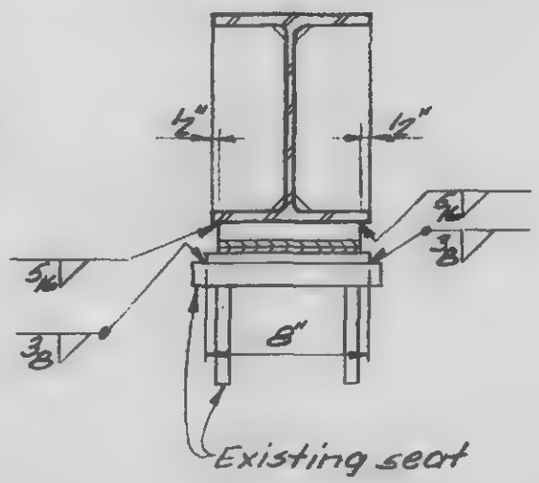

Section X-X

D
E
F
G
H
J
K
M

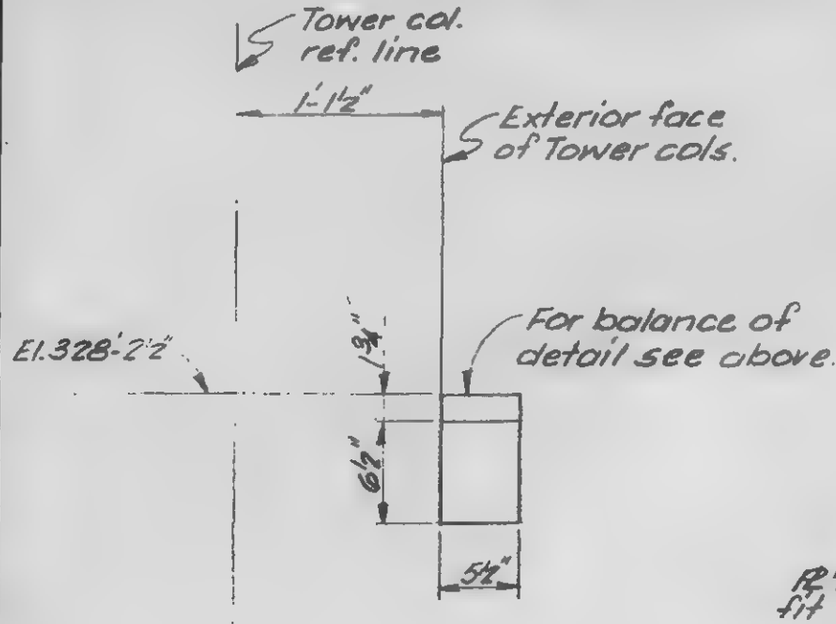

Note ①
Remove exist. seat and replace with new seat.

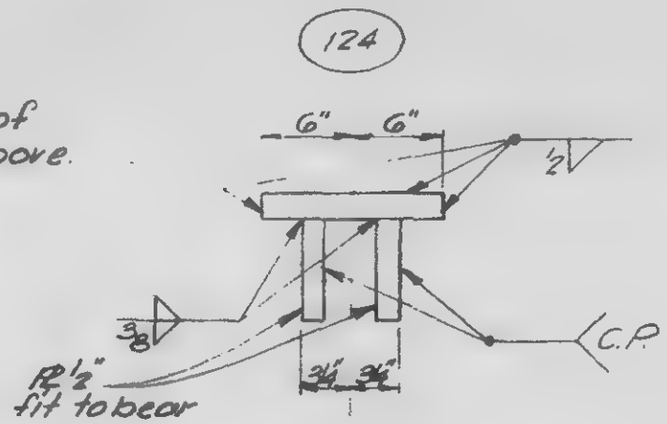

Schedule

Detail Number	Elevation Top of Seat
② D	329'-3⅝"
① E	328'-2½"
F	324'-1"
G	322'-8½"
H	318'-7"
J	317'-2½"
K	313'-1"
M	311'-8½"

LICENSED PROFESSIONAL ENGINEER LESLIE E. ROBERTSON No. 34360 UNIVERSITY OF THE STATE OF NEW YORK

DESIGNED

DRAWN TR

REVIEWED

E

13-KG.1-1

SKILLING, HELLE, CHRISTIANSEN, ROBERTSON — Structural Engineers

PROJECT THE WORLD TRADE CENTER | TITLE SLIDE CONNECTIONS - TOWER B | DATE 11-3-72

REVISIONS

RELEASED FOR CONSTRUCTION 11-20-72

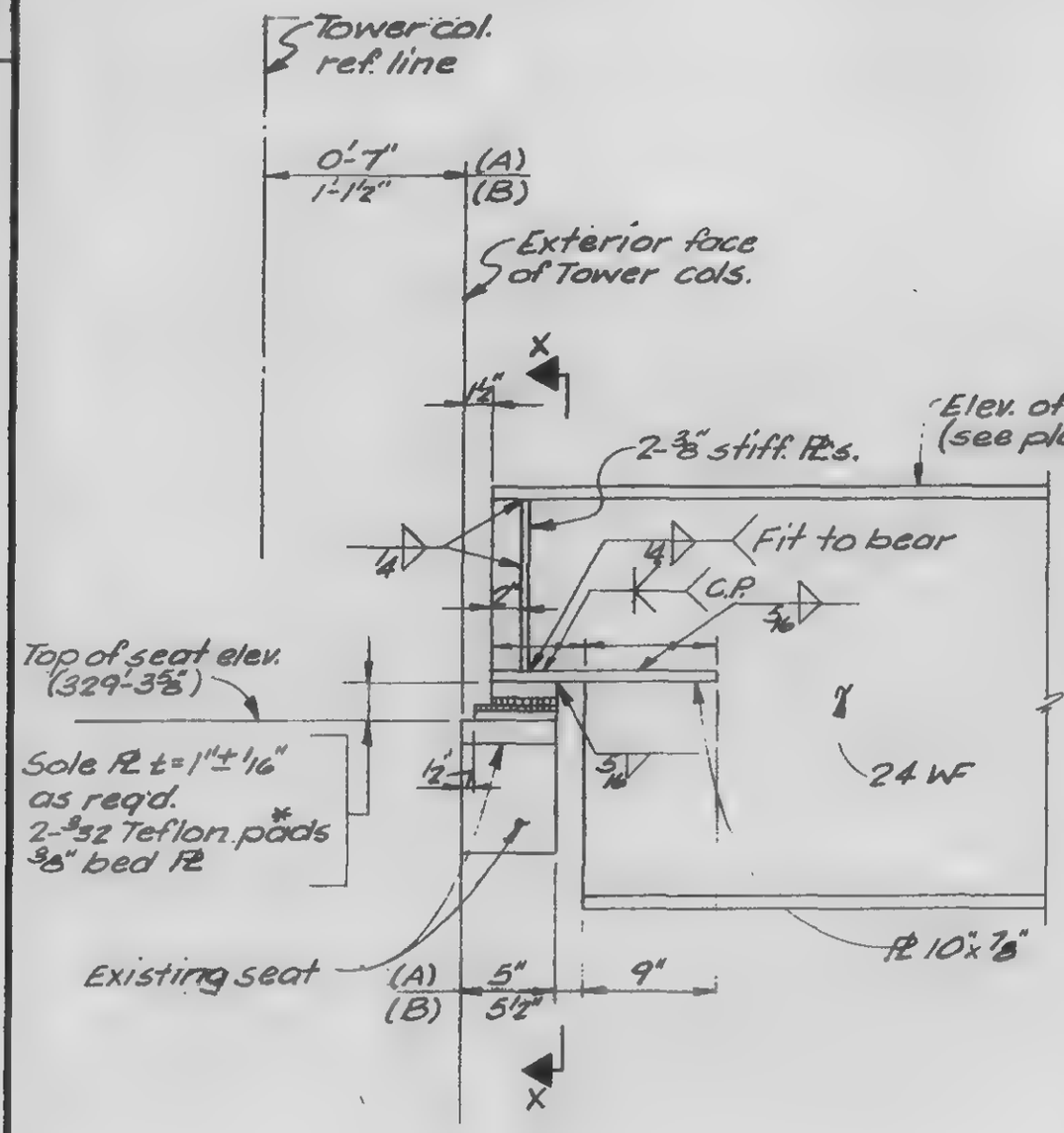

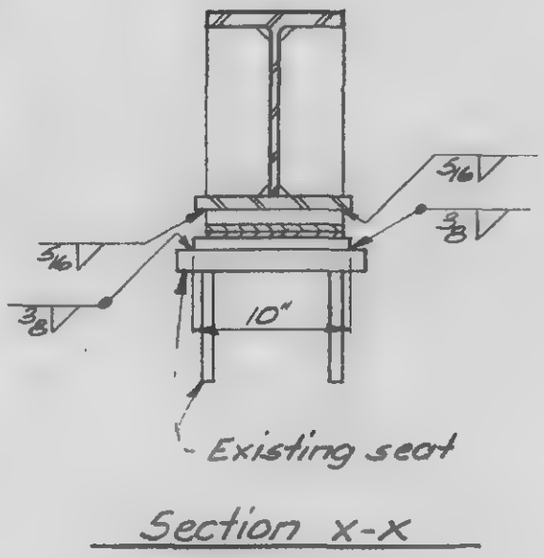

Section X-X

* Teflon pads to have a bearing capacity of 2000 psi.

LICENSED PROFESSIONAL ENGINEER — LESLIE E. ROBERTSON — No. 34360 — UNIVERSITY OF THE STATE OF NEW YORK

DESIGNED

DRAWN TR

REVIEWED

A

B

13-KG.1-2

SKILLING, HELLE, CHRISTIANSEN, ROBERTSON — Structural & Civil Engineers

PROJECT: THE WORLD TRADE CENTER | TITLE: SLIDE CONNECTION Tower B | DATE: 11-3-72

REVISIONS
RELEASED FOR CONSTRUCTION 11-20-72

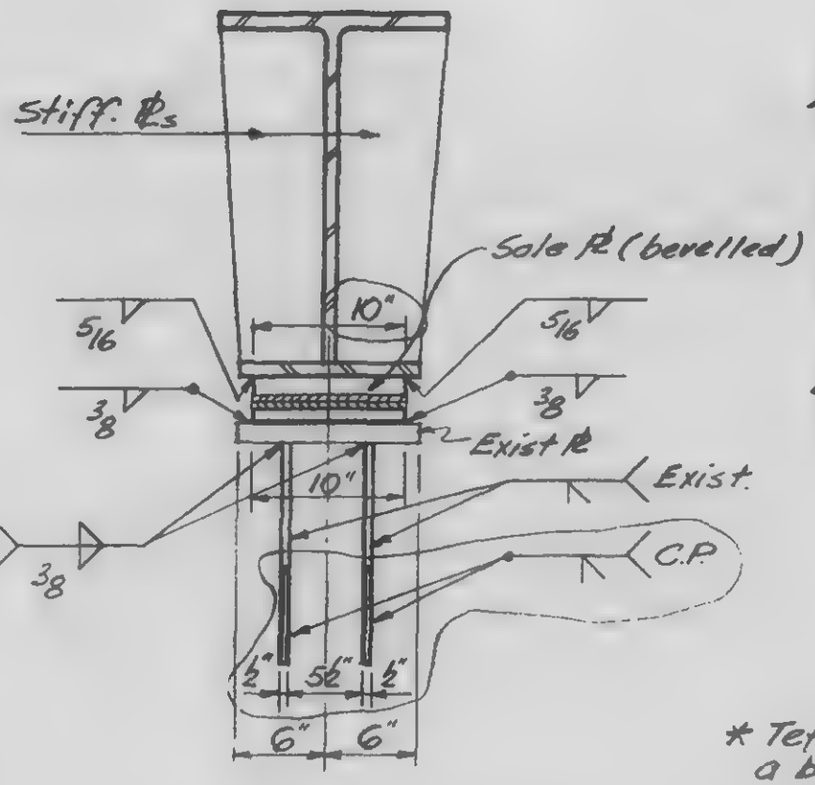

Section a-a

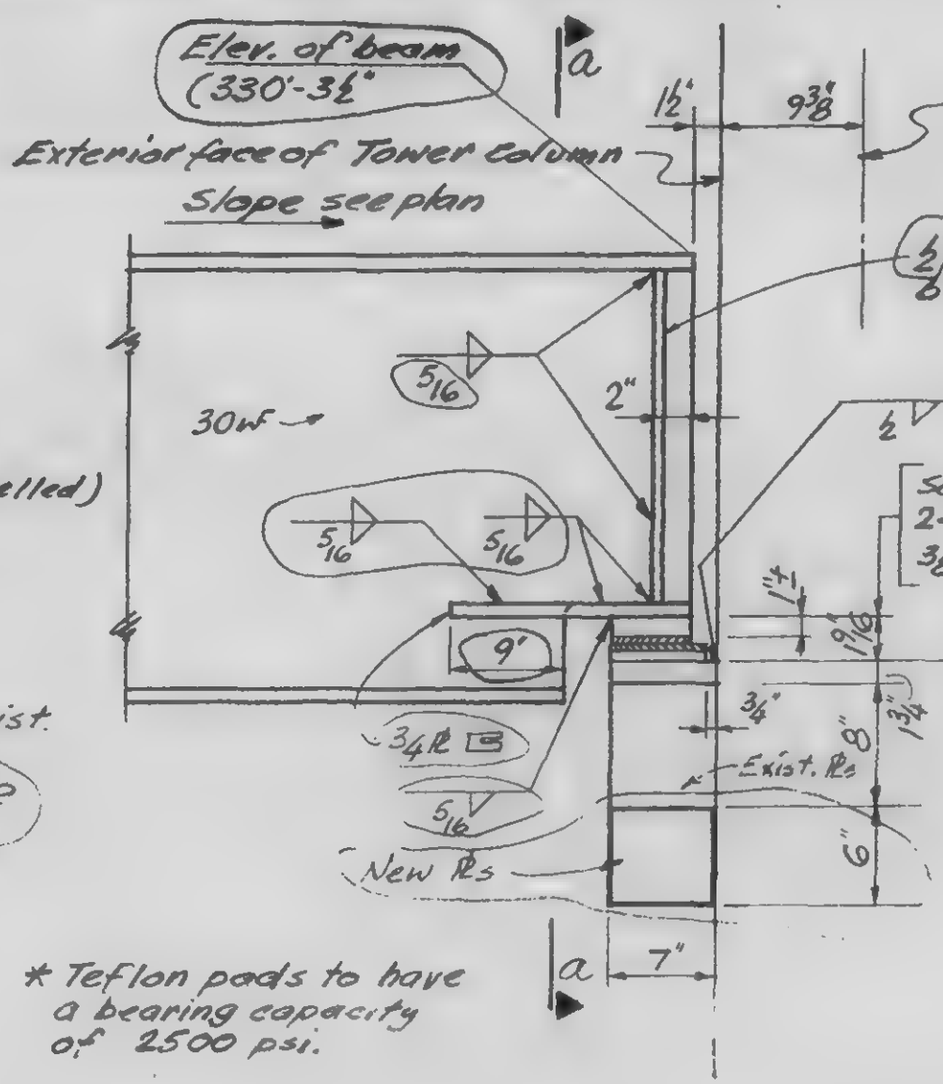

* Teflon pads to have a bearing capacity of 2500 psi.

Elevation

LICENSED PROFESSIONAL ENGINEER — LESLIE E. ROBERTSON — No. 34360 — UNIVERSITY OF THE STATE OF NEW YORK

DESIGNED
DRAWN
REVIEWED

13-K6.1-3

SKILLING, HELLE, CHRISTIANSEN, ROBERTSON — Structural & Civil Engineers

PROJECT: THE WORLD TRADE CENTER | TITLE: SLIDE CONNECTIONS | DATE: 11-20-72

REVISIONS

RELEASED FOR CONSTRUCTION 11-20-72

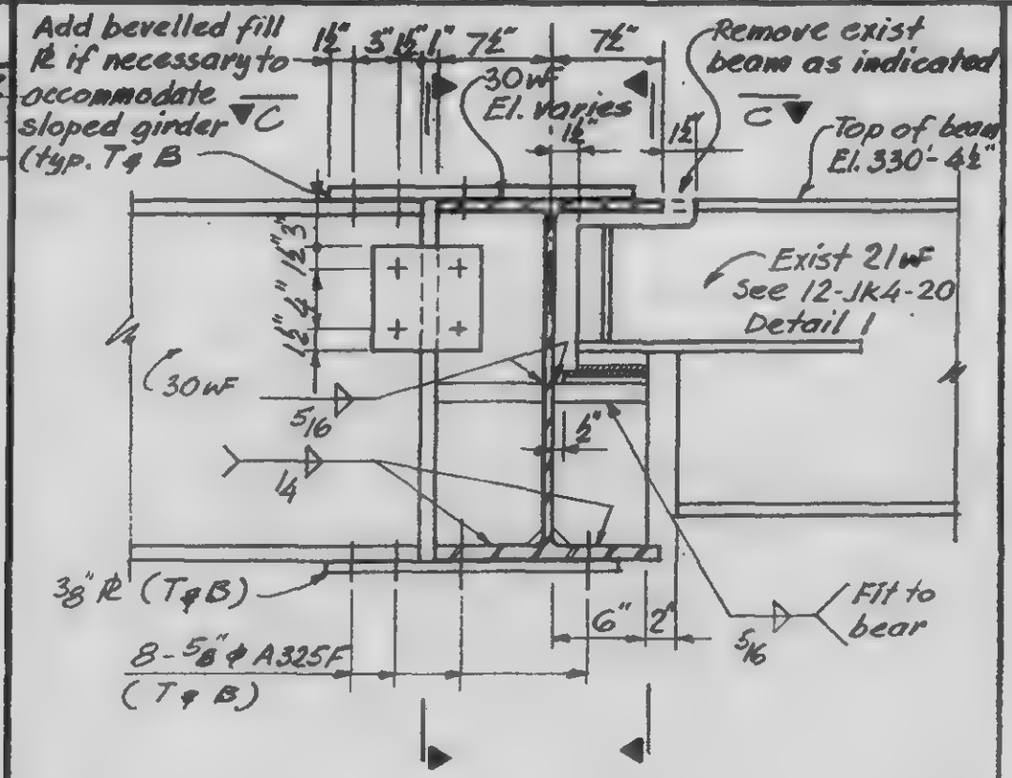

A

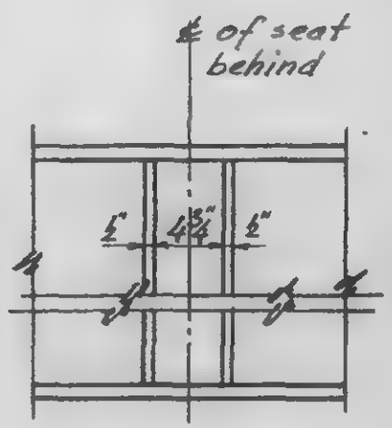

d

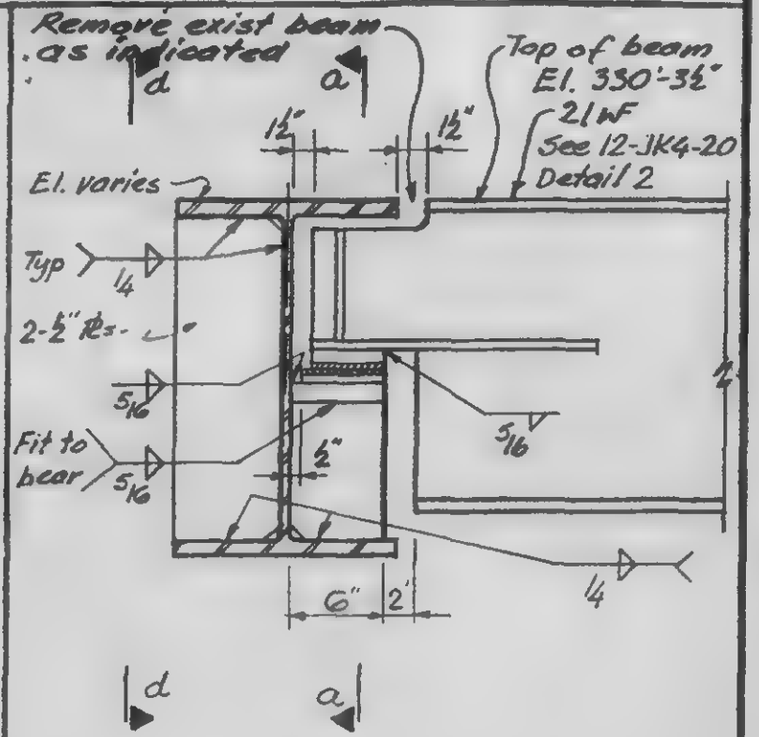

B

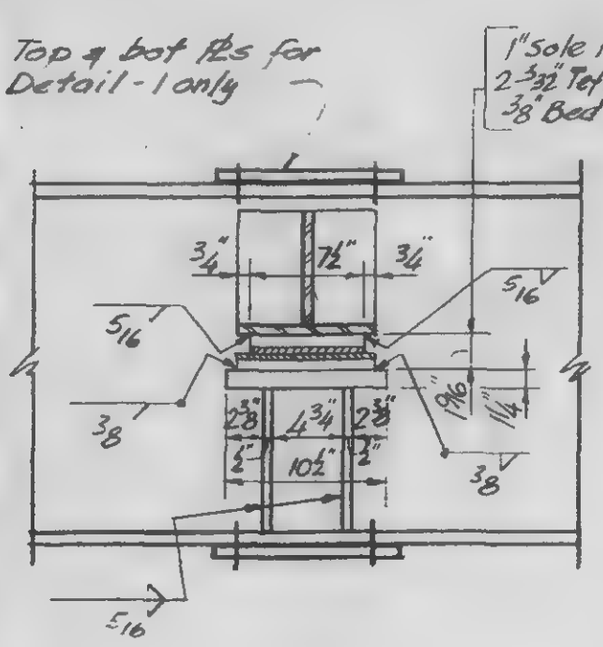

*Teflon pads to have a bearing capacity of 2000 psi

a

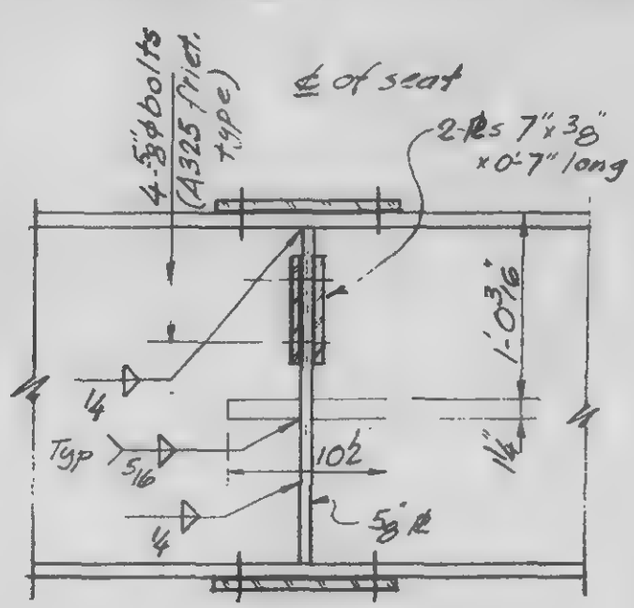

b c

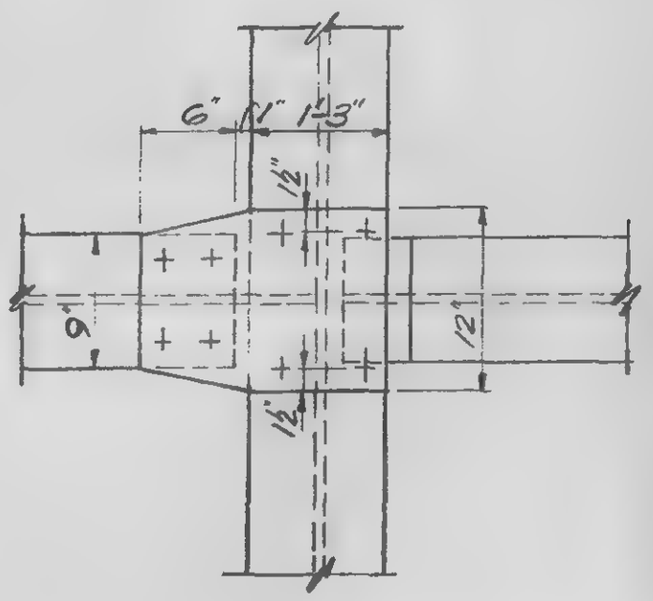

13-K6.1-4

LICENSED PROFESSIONAL ENGINEER — LESLIE E. ROBERTSON — No 34360 — UNIVERSITY OF THE STATE OF NEW YORK

DESIGNED

DRAWN

REVIEWED

SKILLING, HELLE, CHRISTIANSEN, ROBERTSON — Structural & Civil Engineers

PROJECT: THE WORLD TRADE CENTER | TITLE: SLIDE CONNECTION | DATE: 4-20-73

REVISIONS

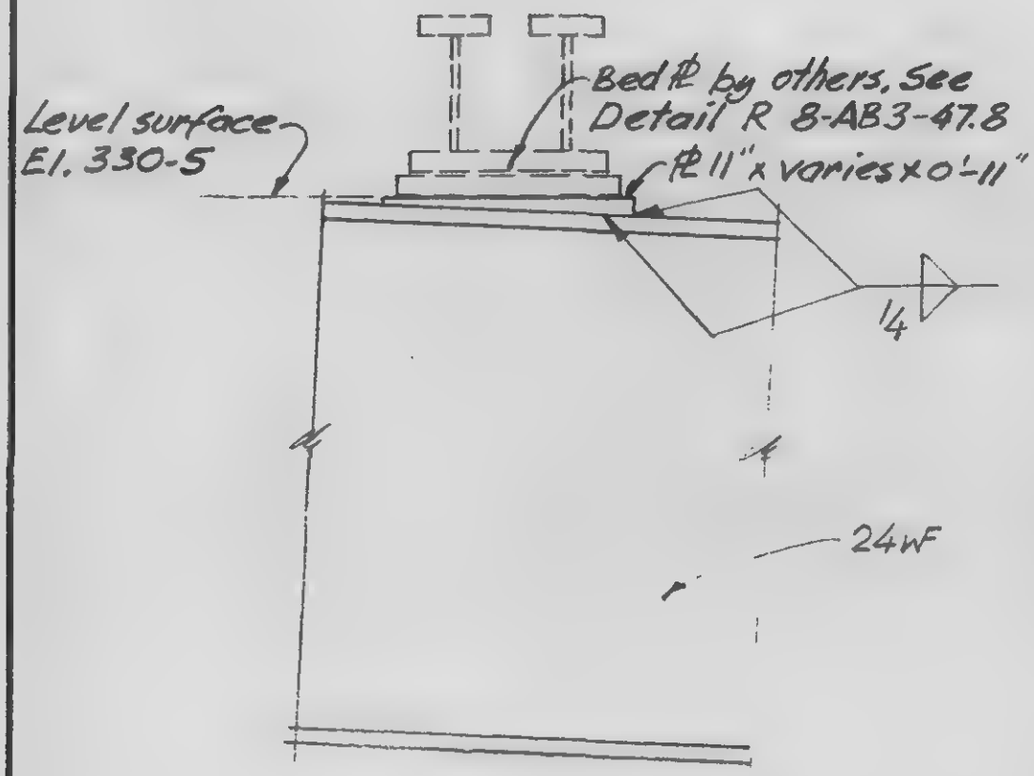

LICENSED PROFESSIONAL ENGINEER
LESLIE E. ROBERTSON
No. 34360
UNIVERSITY OF THE STATE OF NEW YORK

DESIGNED

DRAWN

REVIEWED

A

13-K6.1-5

SKILLING, HELLE, CHRISTIANSEN, ROBERTSON — Structural & Civil Engineers

PROJECT THE WORLD TRADE CENTER | TITLE BEAM CONNECTION DETAIL AT STAIR | DATE 11-3-72

REVISIONS

Released for construction 11-20-72

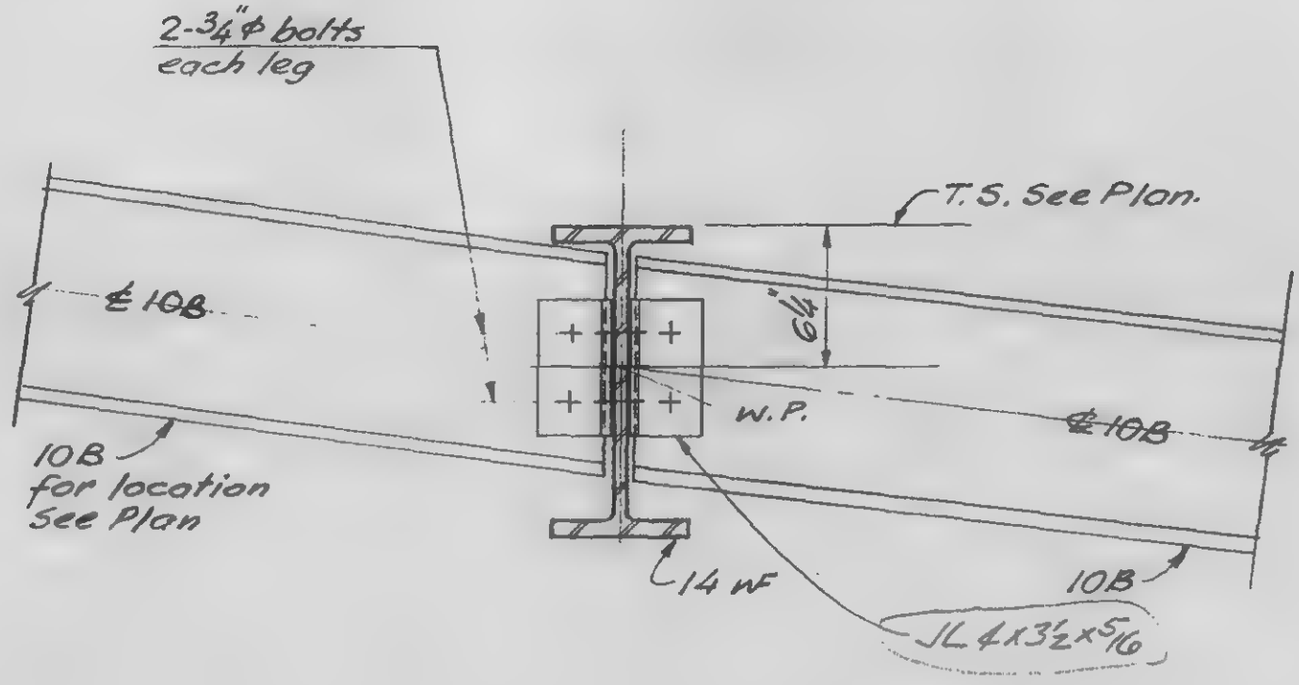

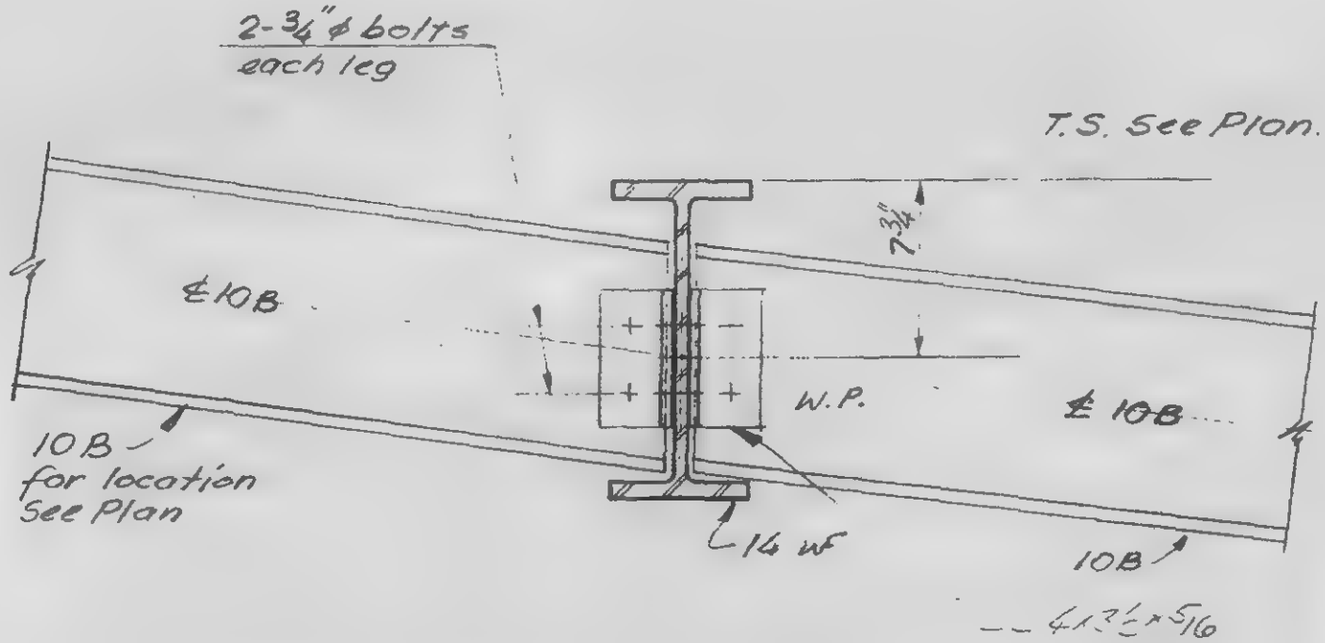

LICENSED PROFESSIONAL ENGINEER LESLIE E. ROBERTSON No 24300 UNIVERSITY OF THE STATE OF NEW YORK

DESIGNED

DRAWN

A

B

13-KG.2-1

SKILLING, HELLE, CHRISTIANSEN, ROBERTSON — Structural & Civil Engineers

PROJECT: THE WORLD TRADE CENTER | TITLE: DETAIL OF HANGERS AT STAIR | DATE: 11-3-72

REVISIONS

Released for construction 11-20-72

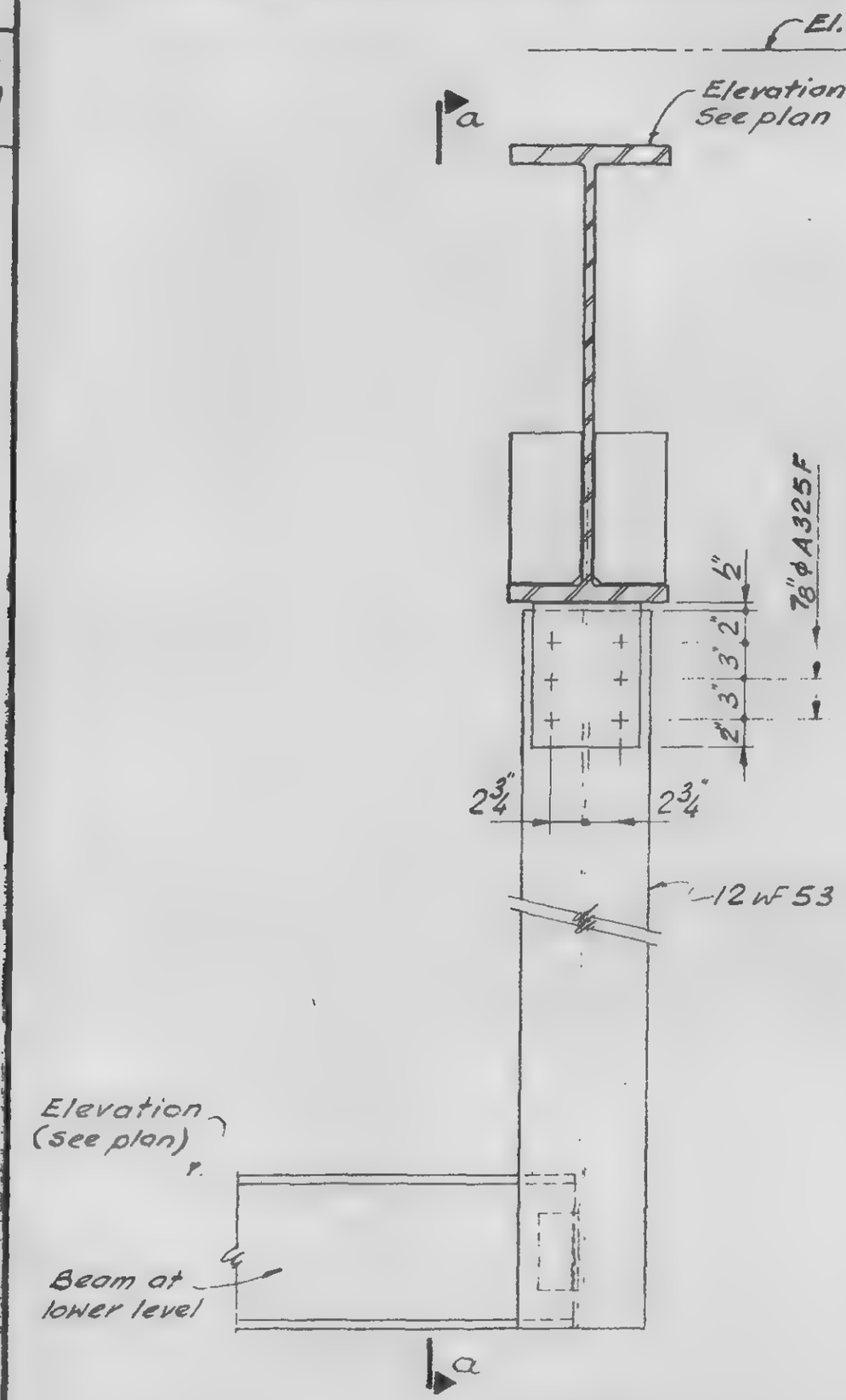

Elevation

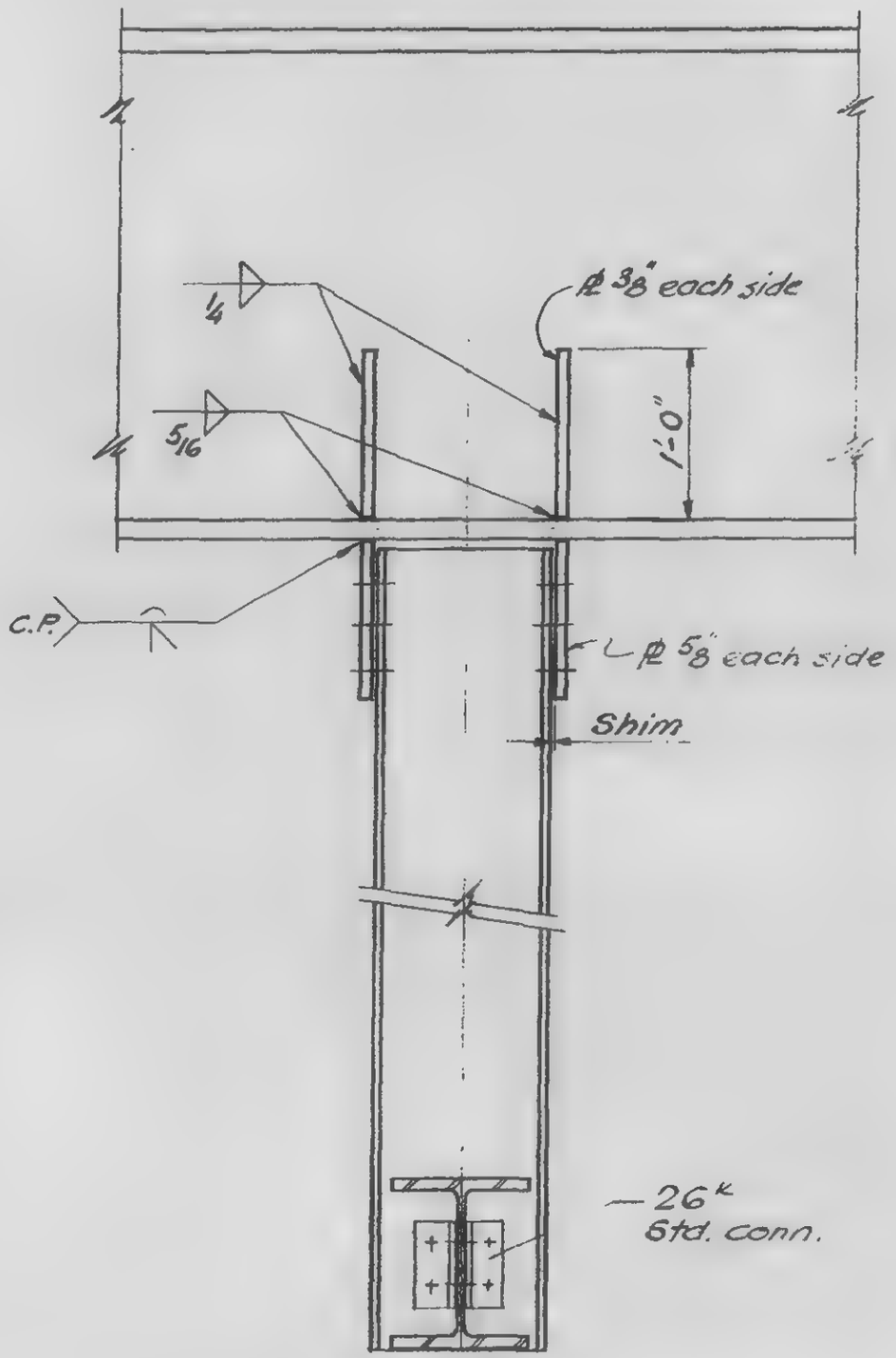

Section a-a

LICENSED PROFESSIONAL ENGINEER — LESLIE E. ROBERTSON — No. 34360 — UNIVERSITY OF THE STATE OF NEW YORK

DESIGNED

DRAWN John Guccius

REVIEWED

13-KG.2-2

SKILLING, HELLE, CHRISTIANSEN, ROBERTSON — Structural & Civil Engineers

PROJECT: THE WORLD TRADE CENTER | TITLE: DETAILS TO EXISTING AT STAIR | DATE: 11-3-72

REVISIONS

Relegsed for construction 11-20-72

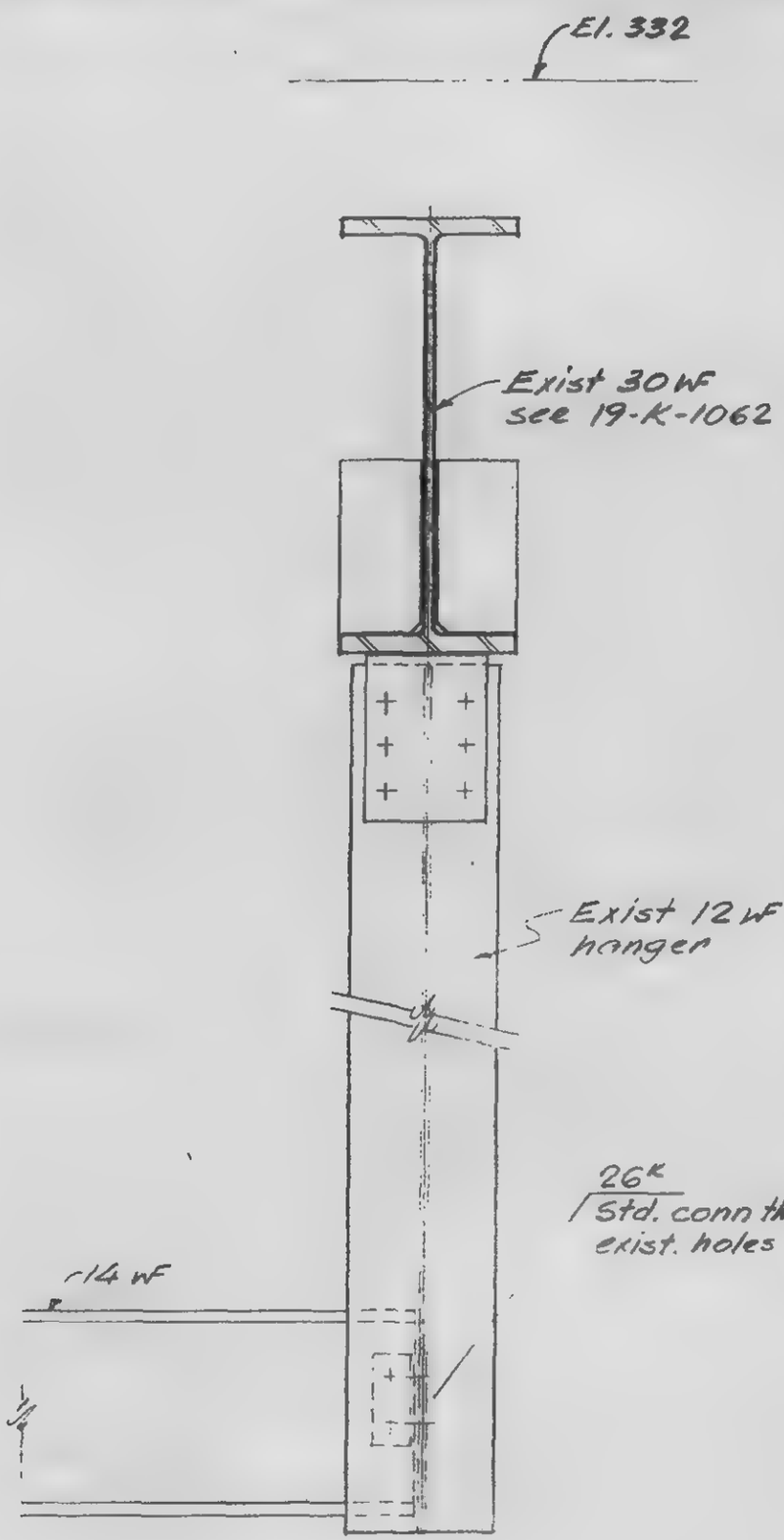

A

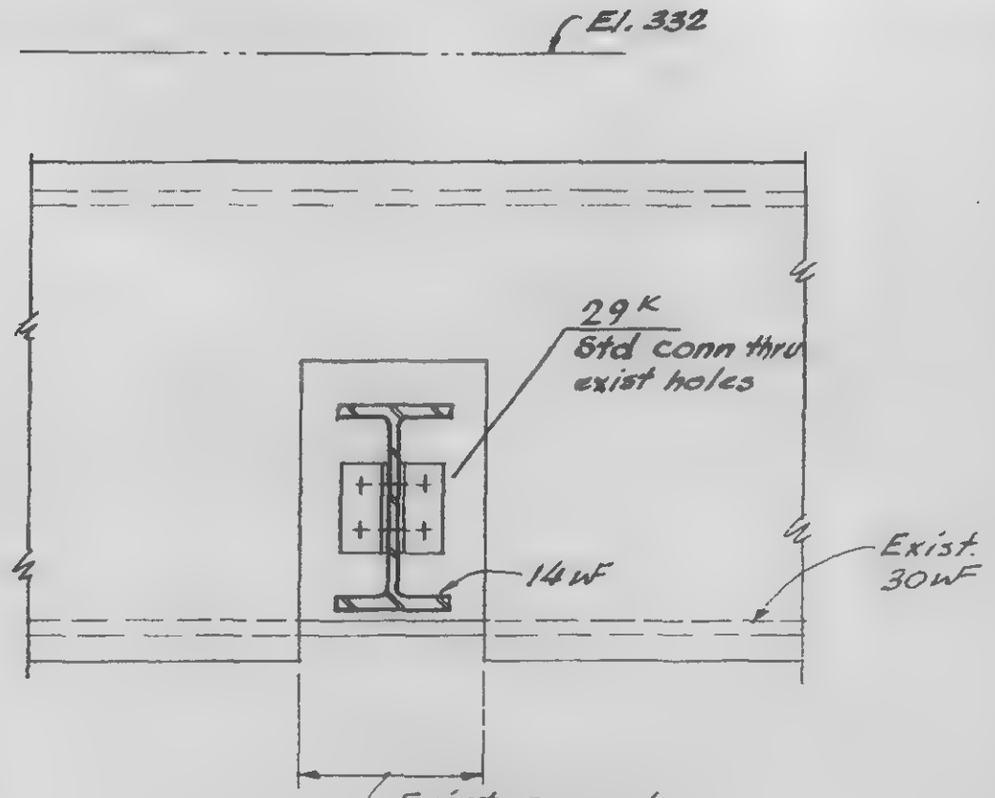

B

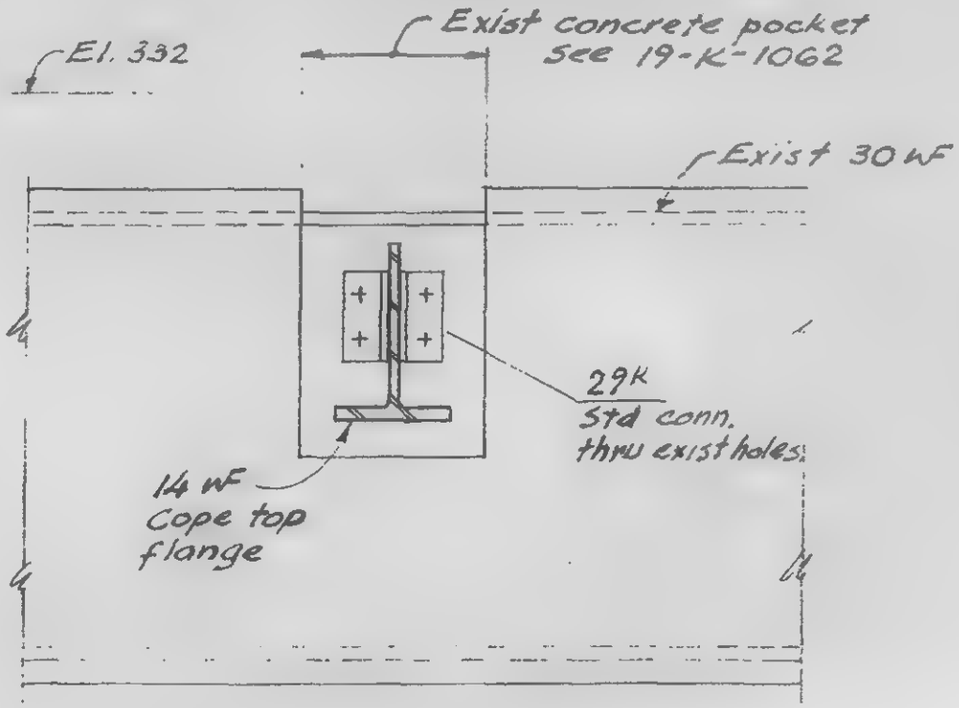

C

LICENSED PROFESSIONAL ENGINEER — LESLIE E. ROBERTSON — No. 34360 — UNIVERSITY OF THE STATE OF NEW YORK

DESIGNED

DRAWN

REVIEWED

13-K6.2-3

SKILLING, HELLE, CHRISTIANSEN, ROBERTSON — Structural & Civil Engineers

PROJECT: THE WORLD TRADE CENTER | TITLE: DETAIL TO EXISTING AT STAR | DATE: 11-3-72

REVISIONS

Released for construction 11-20-72

2-5-73

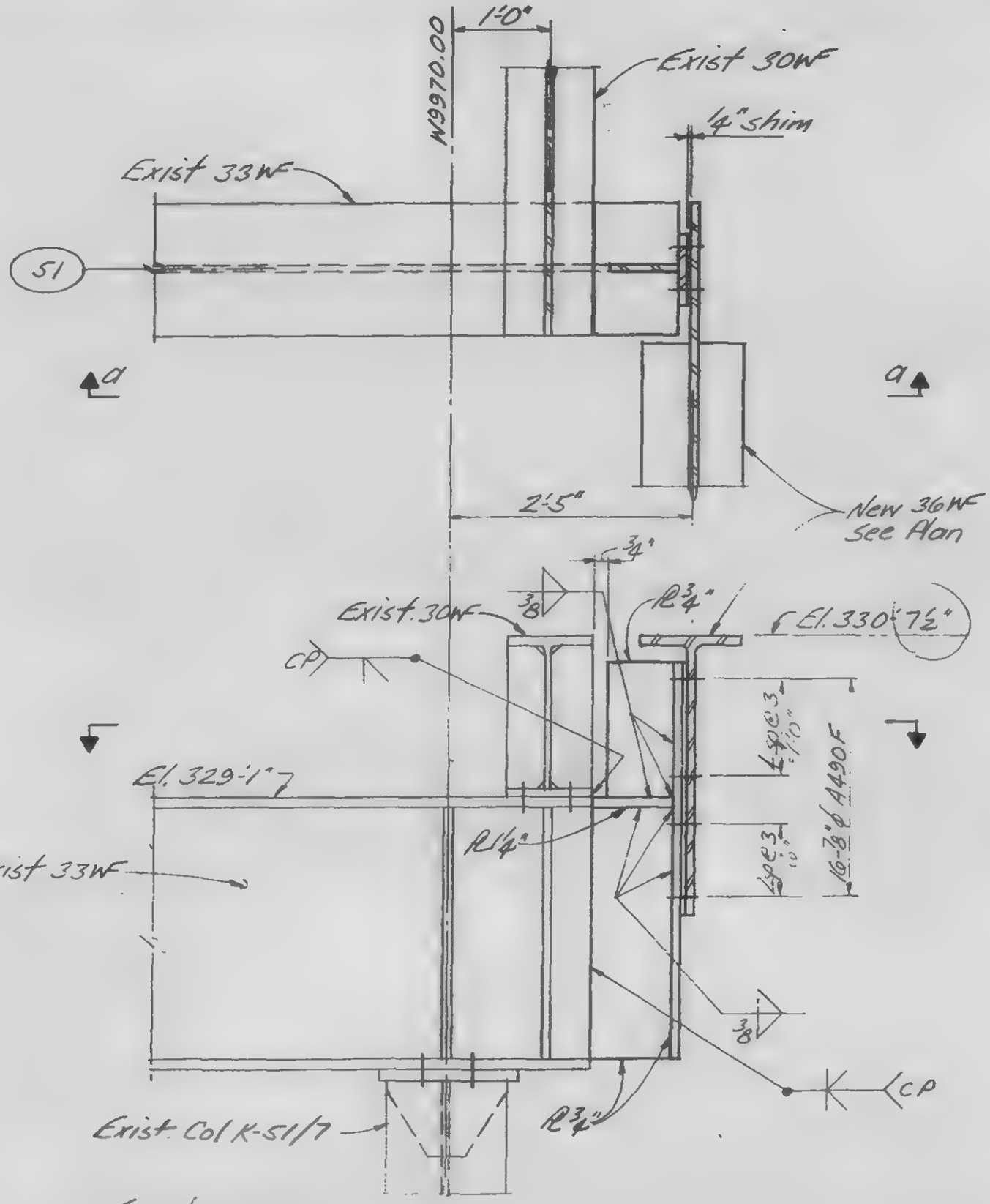

Section a-a

LICENSED PROFESSIONAL ENGINEER — LESLIE E. ROBERTSON — No. 34360 — UNIVERSITY OF THE STATE OF NEW YORK

DESIGNED

DRAWN

REVIEWED

13-K6.2-4

SKILLING, HELLE, CHRISTIANSEN, ROBERTSON — Structural & Civil Engineers

PROJECT: THE WORLD TRADE CENTER

TITLE: BEAM CONNECTIONS AT EXISTING

DATE: 11-3-72

REVISIONS

Release for construction 11-20-72

2-5-73

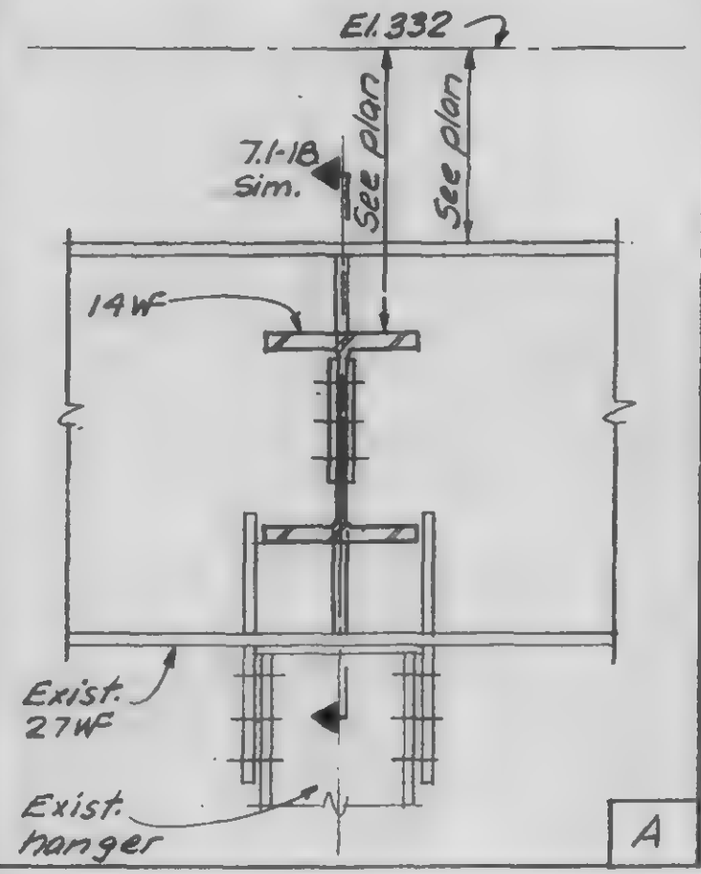

A

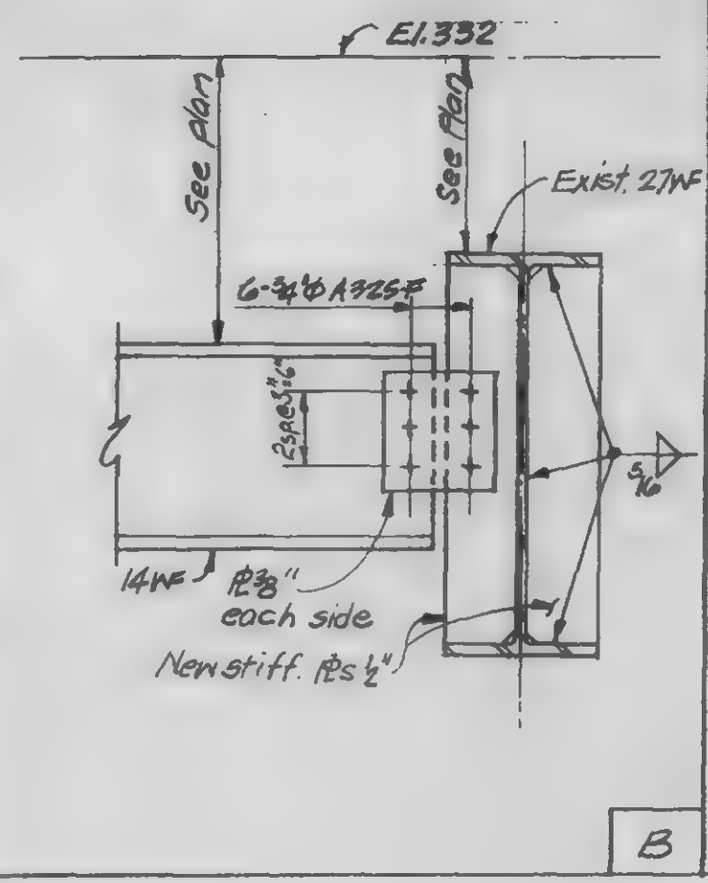

B

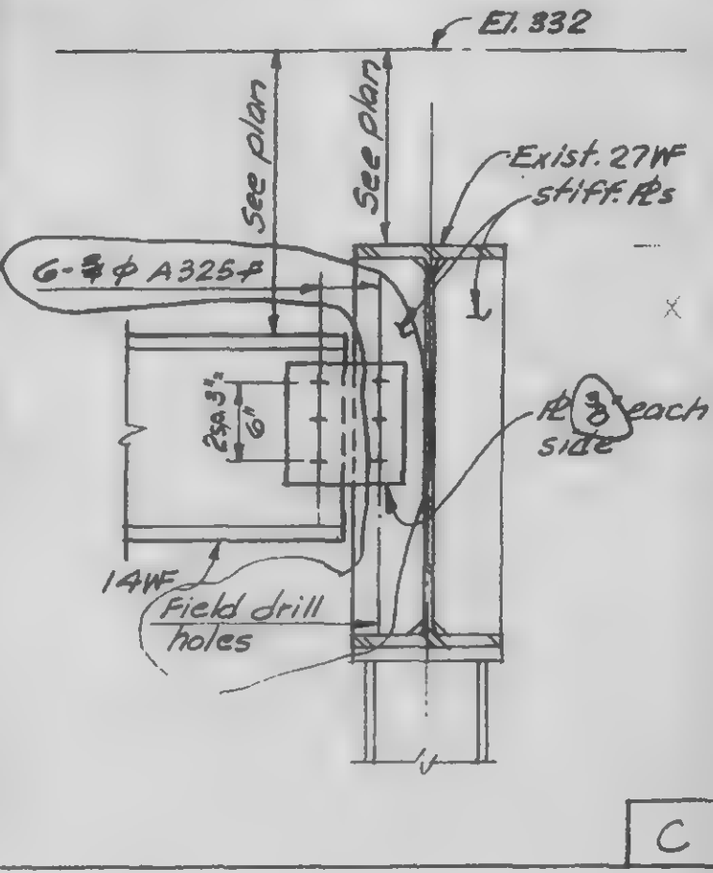

C

LICENSED PROFESSIONAL ENGINEER — LESLIE E. ROBERTSON — No. 34360 — UNIVERSITY OF THE STATE OF NEW YORK

DESIGNED

DRAWN A.L. Frangui

REVIEWED

13-K7.1-1

SKILLING, HELLE, CHRISTIANSEN, ROBERTSON — Structural & Civil Engineers

PROJECT THE WORLD TRADE CENTER | TITLE BEAM END NOTCHES & CONNECTIONS | DATE 11-3-72

REVISIONS

Released for construction 11-20-72

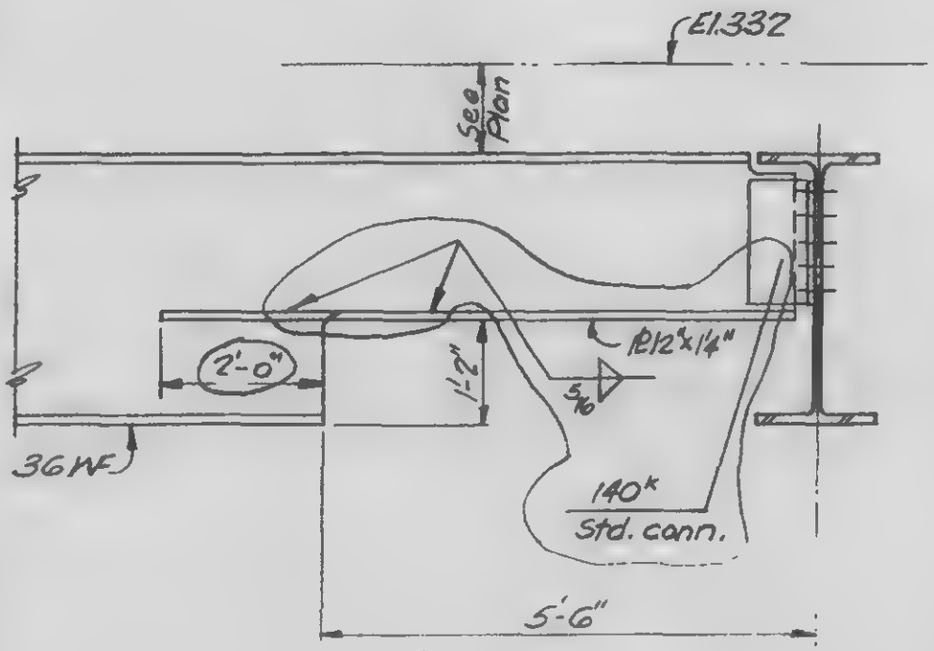

A

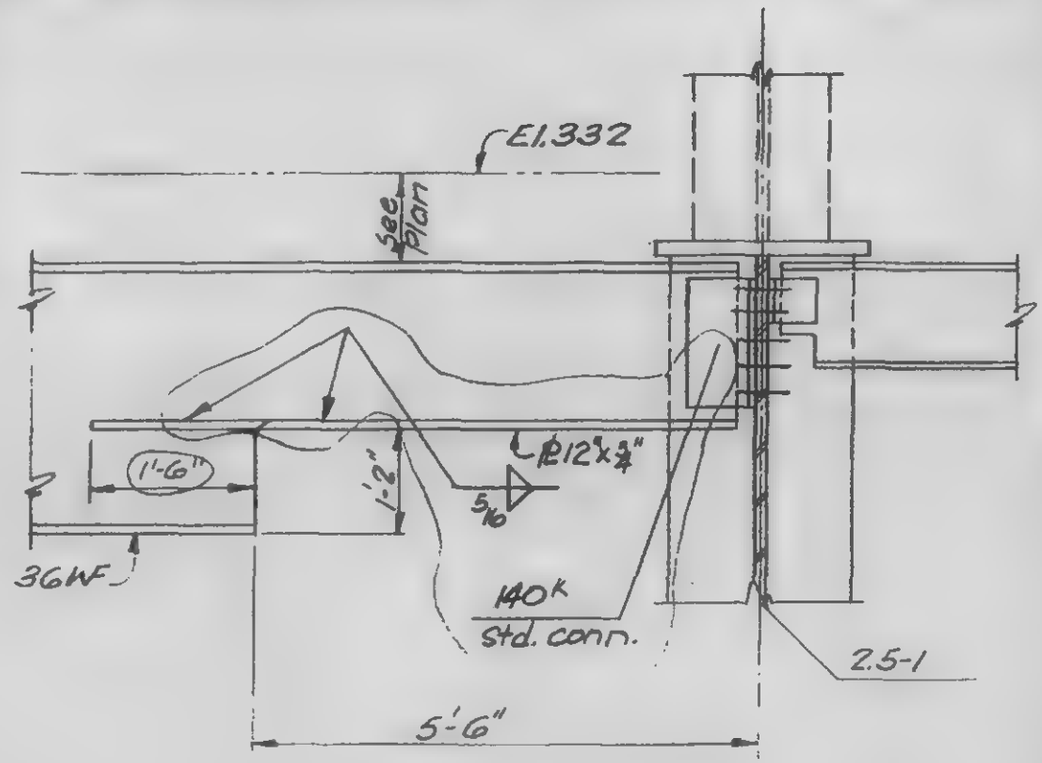

B

LICENSED PROFESSIONAL ENGINEER
LESLIE E. ROBERTSON
No 34300
UNIVERSITY OF THE STATE OF NEW YORK

DESIGNED WAB

DRAWN TR

13-K7.2-1

SKILLING, HELLE, CHRISTIANSEN, ROBERTSON — Structural & Civil Engineers

PROJECT: THE WORLD TRADE CENTER | TITLE: BEAM NOTCH IN EXISTING BEAM | DATE: 11-3-12

REVISIONS

Released for construction 11-20-12

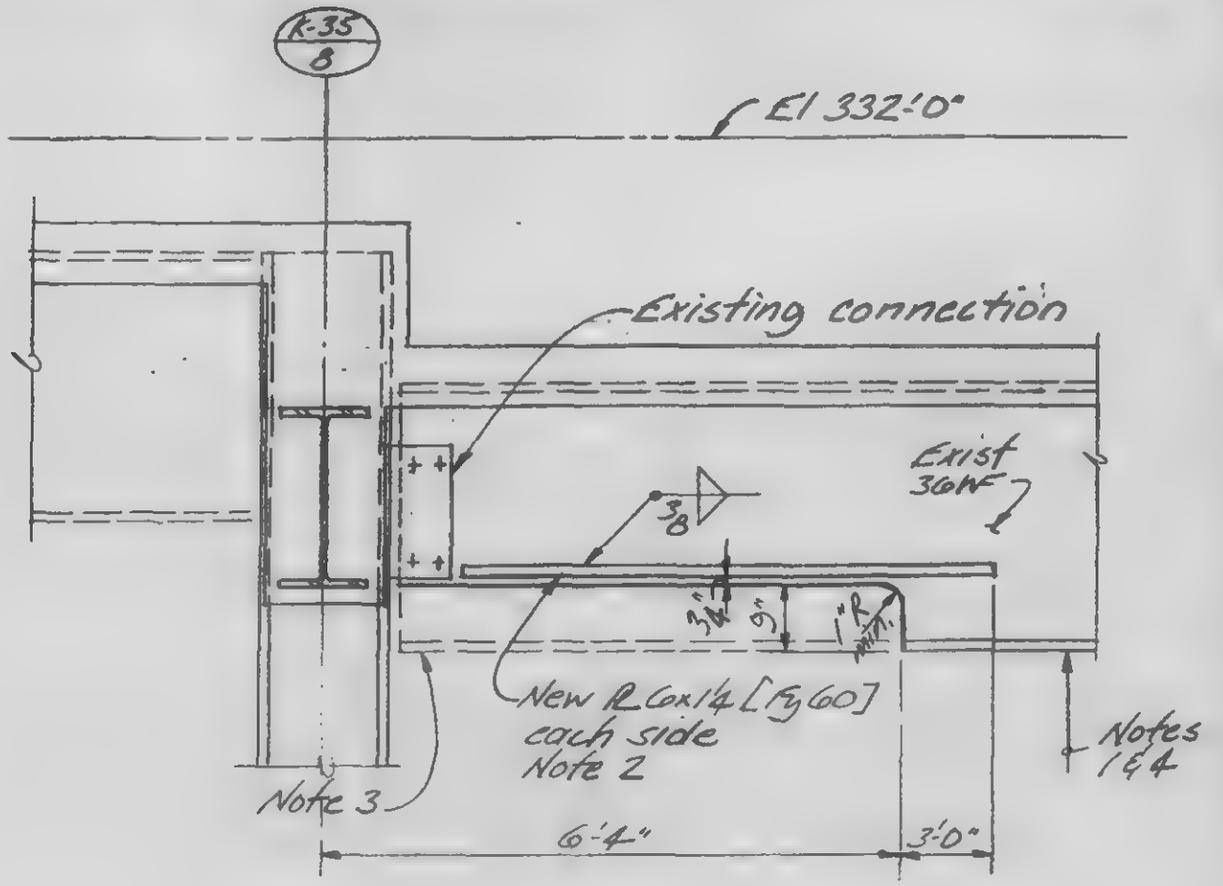

Section A-A

Proceedure

1. Shore
2. Install new PLs
3. Remove portion of beam indicated
4. Remove shore

LICENSED PROFESSIONAL ENGINEER — LESLIE E. ROBERTSON — No. 24360 — UNIVERSITY OF THE STATE OF NEW YORK

DESIGNED

DRAWN

REVIEWED

A

13 K7.3-1

SKILLING, HELLE, CHRISTIANSEN, ROBERTSON — Structural & Civil Engineers

PROJECT: THE WORLD TRADE CENTER

TITLE: HANGER DETAILS ABOVE MECHANICAL PLATFORM

DATE: 11-3-72

REVISIONS

Released for construction 11-2492

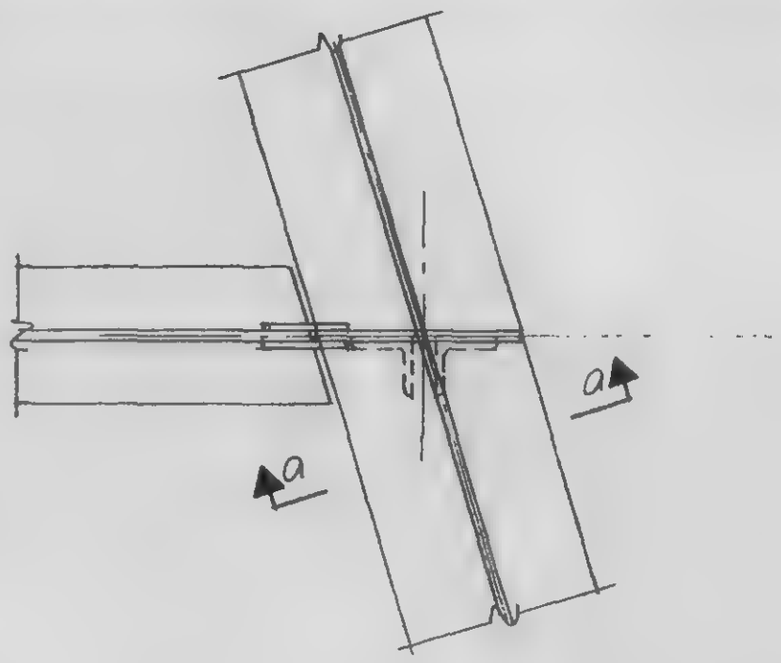

A

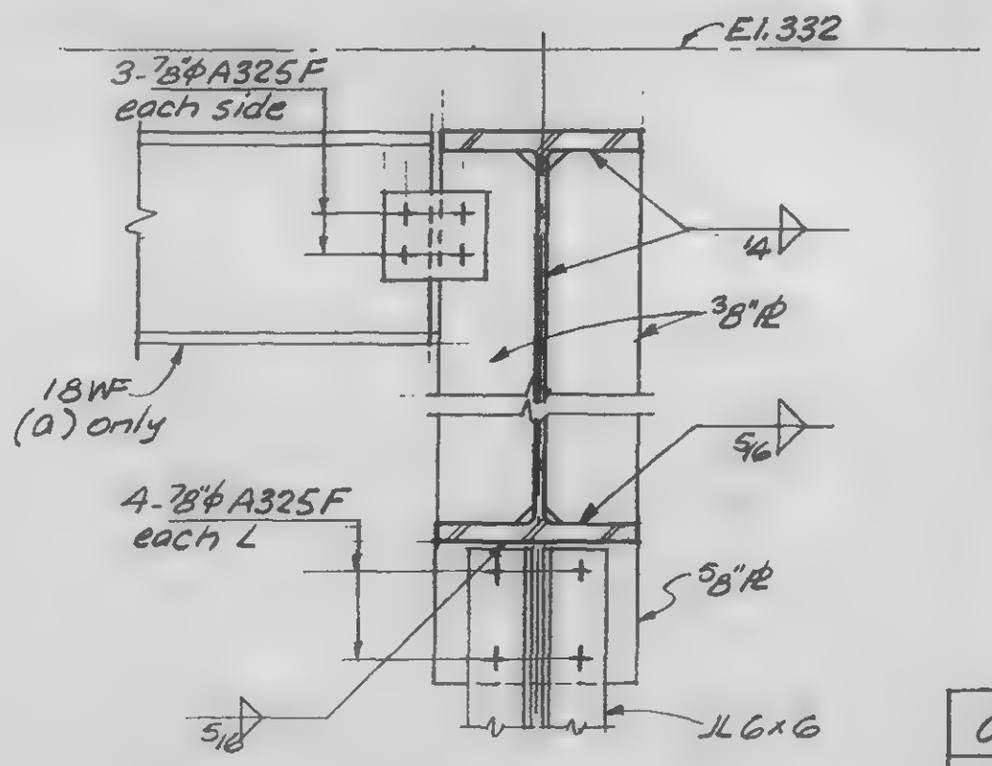

a

b

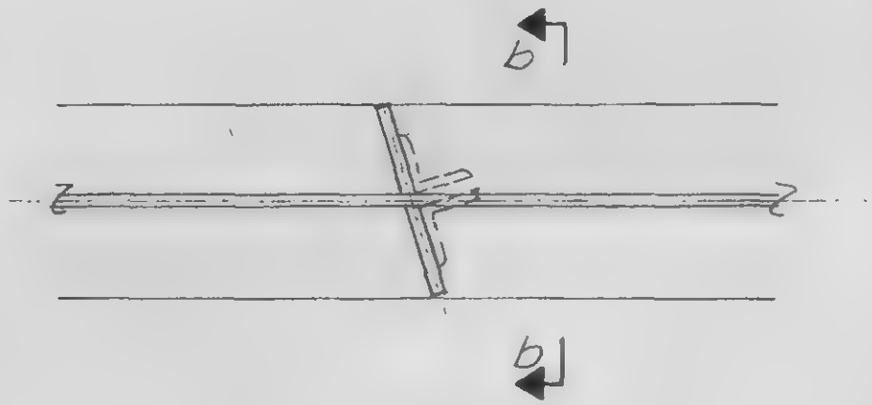

B

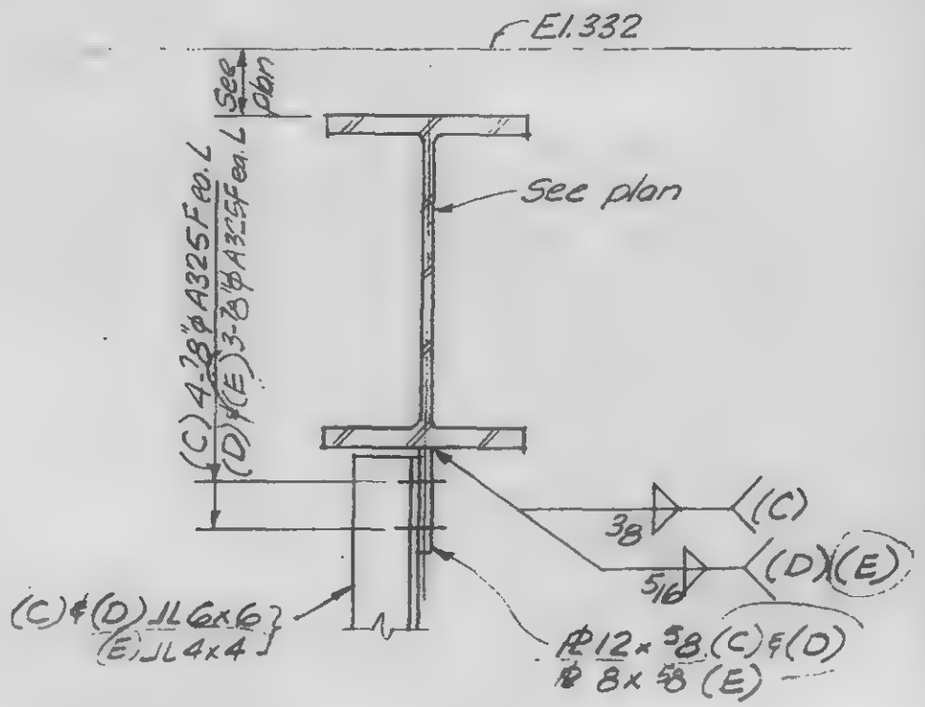

C

D

E

LICENSED PROFESSIONAL ENGINEER — LESLIE E. ROBERTSON — No. 34360 — UNIVERSITY OF THE STATE OF NEW YORK

DESIGNED

DRAWN A.L. Franqui

REVIEWED

13-K8.1-1

SKILLING, HELLE, CHRISTIANSEN, ROBERTSON — Structural & Civil Engineers

PROJECT: THE WORLD TRADE CENTER | TITLE: HANGER DETAILS ABOVE MECHANICAL PLATFORM | DATE: 11-3-72

REVISIONS

Released for construction 11-24-72

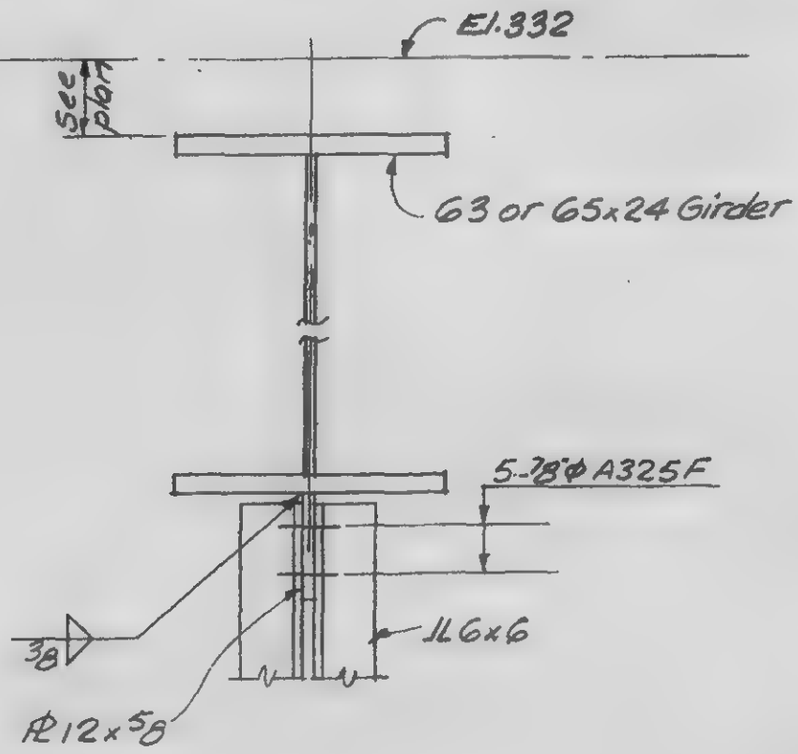

A

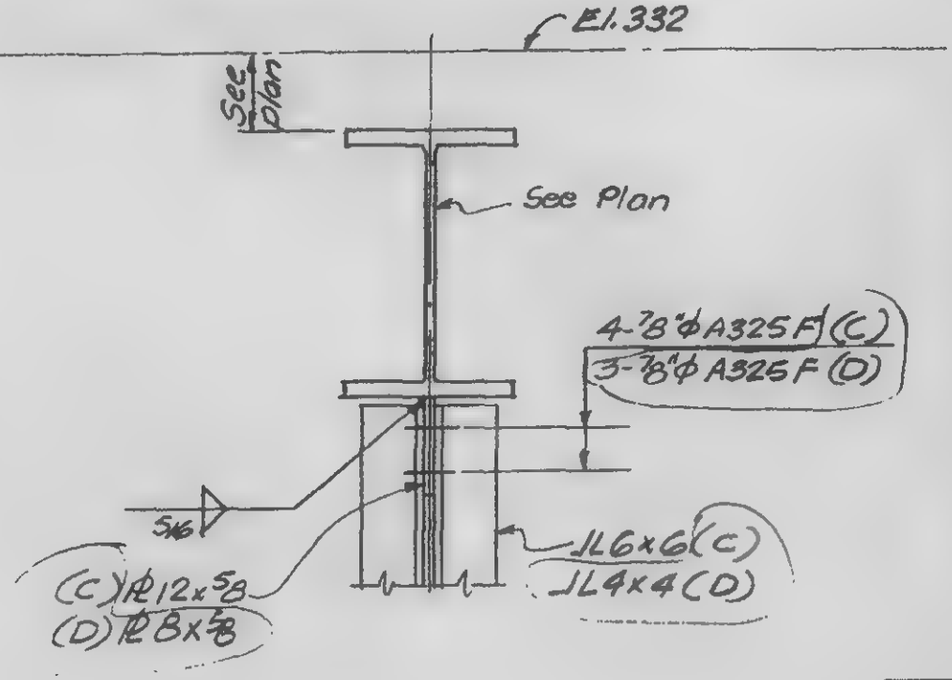

C

D

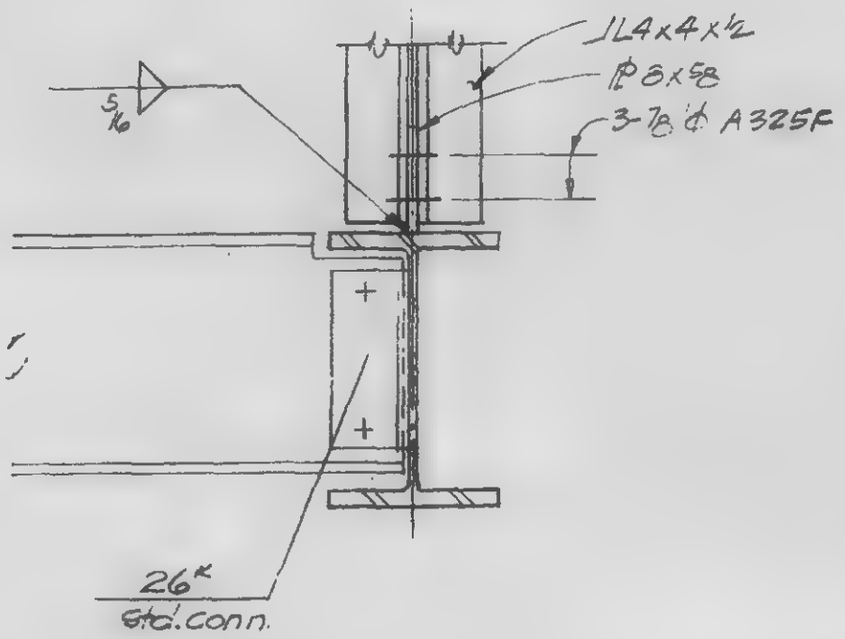

E

LICENSED PROFESSIONAL ENGINEER — LESLIE E. ROBERTSON — No. 34360 — UNIVERSITY OF THE STATE OF NEW YORK

DRAWN: A.L. Franqui

REVIEWED

13-K8.1-2

SKILLING, HELLE, CHRISTIANSEN, ROBERTSON — Structural & Civil Engineers

PROJECT THE WORLD TRADE CENTER | TITLE HANGER DETAILS ABOVE MECHANICAL PLATFORM | DATE 4-20-73

REVISIONS
6-4-73

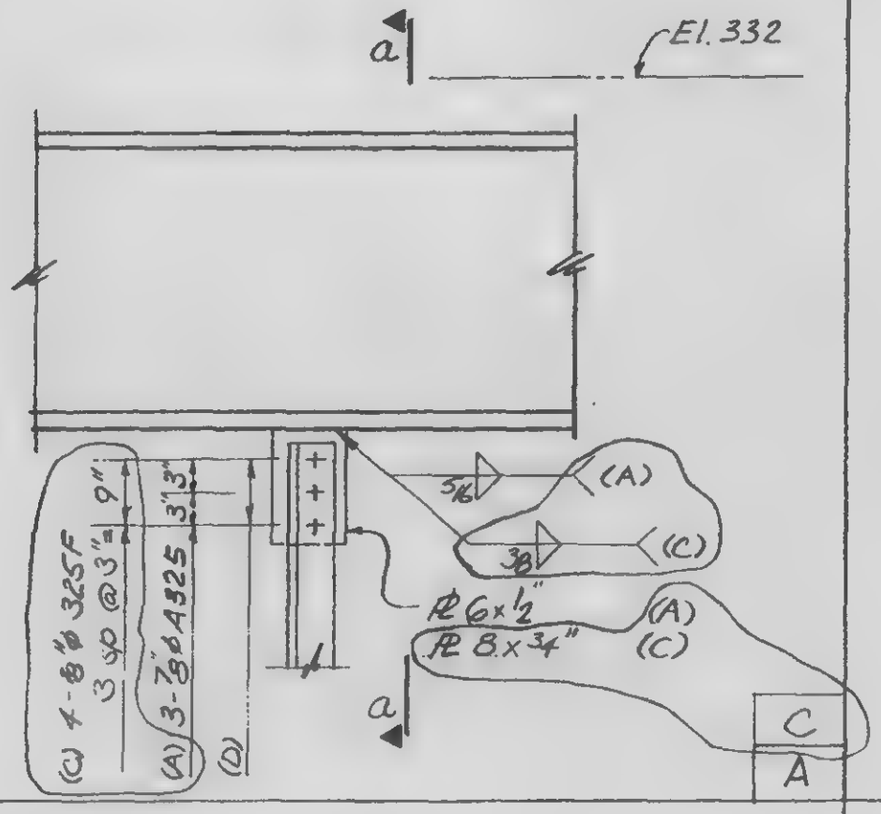

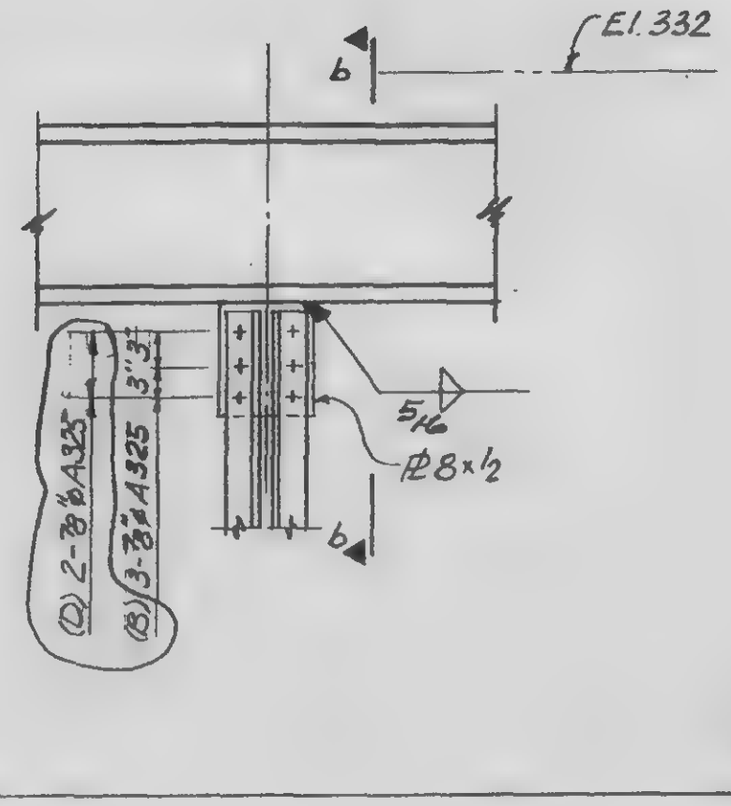

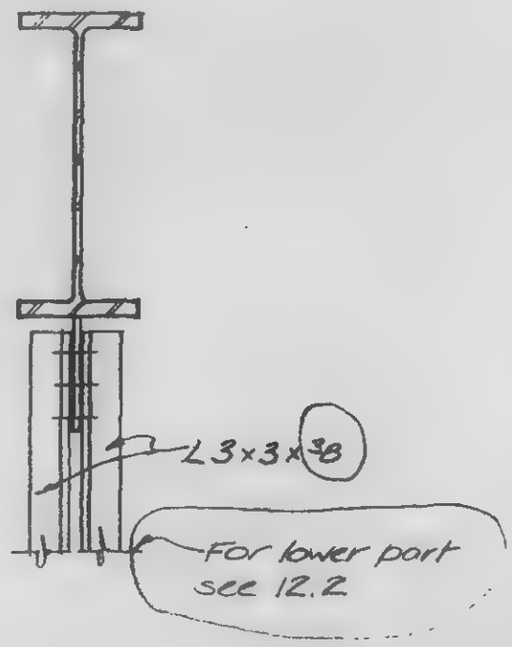

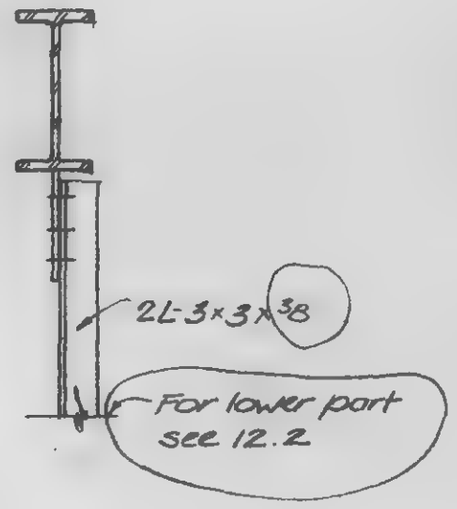

LICENSED PROFESSIONAL ENGINEER
LESLIE E. ROBERTSON
No. 34360
UNIVERSITY OF THE STATE OF NEW YORK

DESIGNED
DRAWN John Gericas
REVIEWED

13-K8.1-3

SKILLING, HELLE, CHRISTIANSEN, ROBERTSON — Structural & Civil Engineers

PROJECT: THE WORLD TRADE CENTER

TITLE: HANGER DETAILS ABOVE MECHANICAL PLATFORM

DATE: 11-3-72

REVISIONS

Released for construction 11-24-72

2-5-73

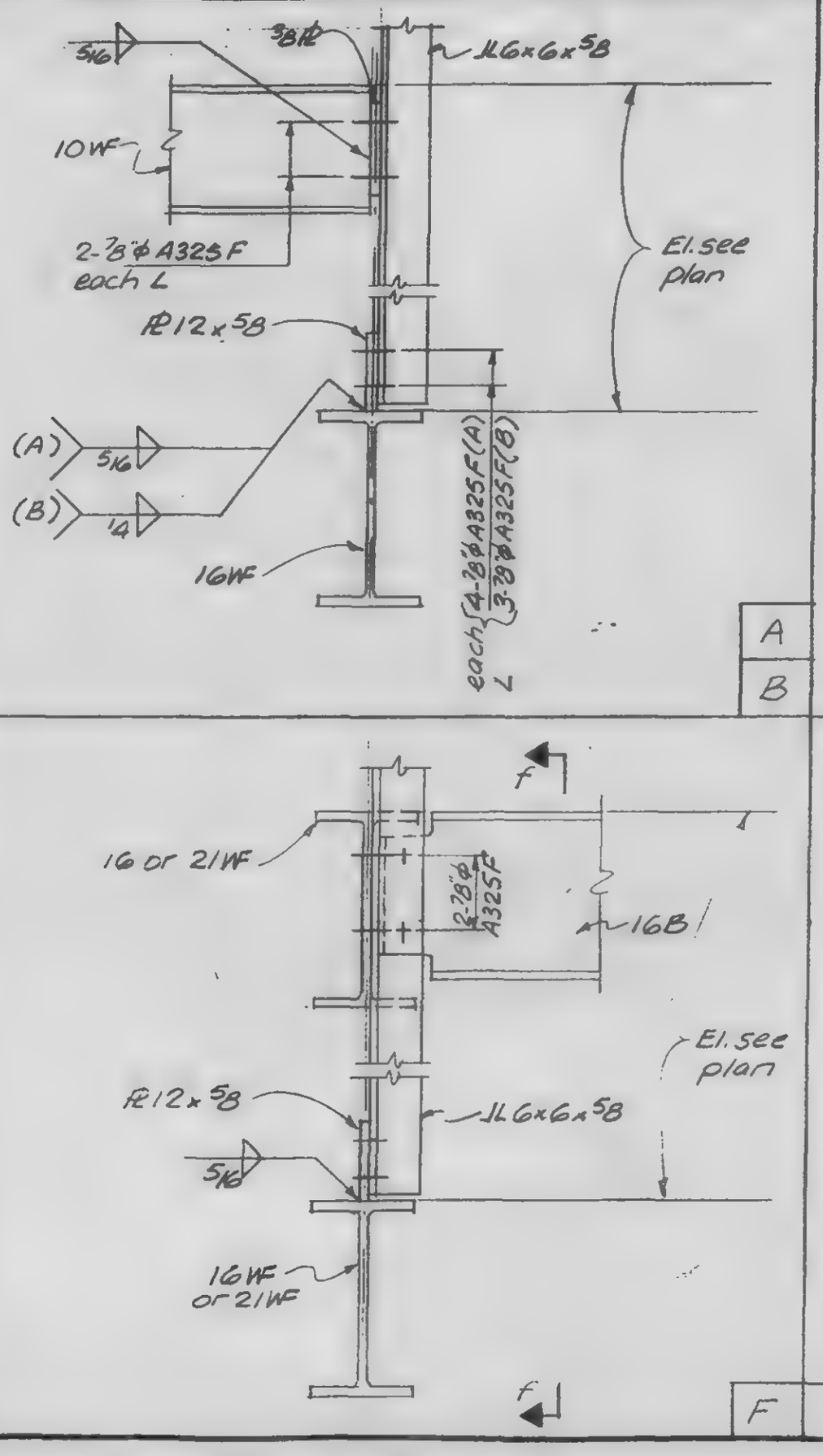

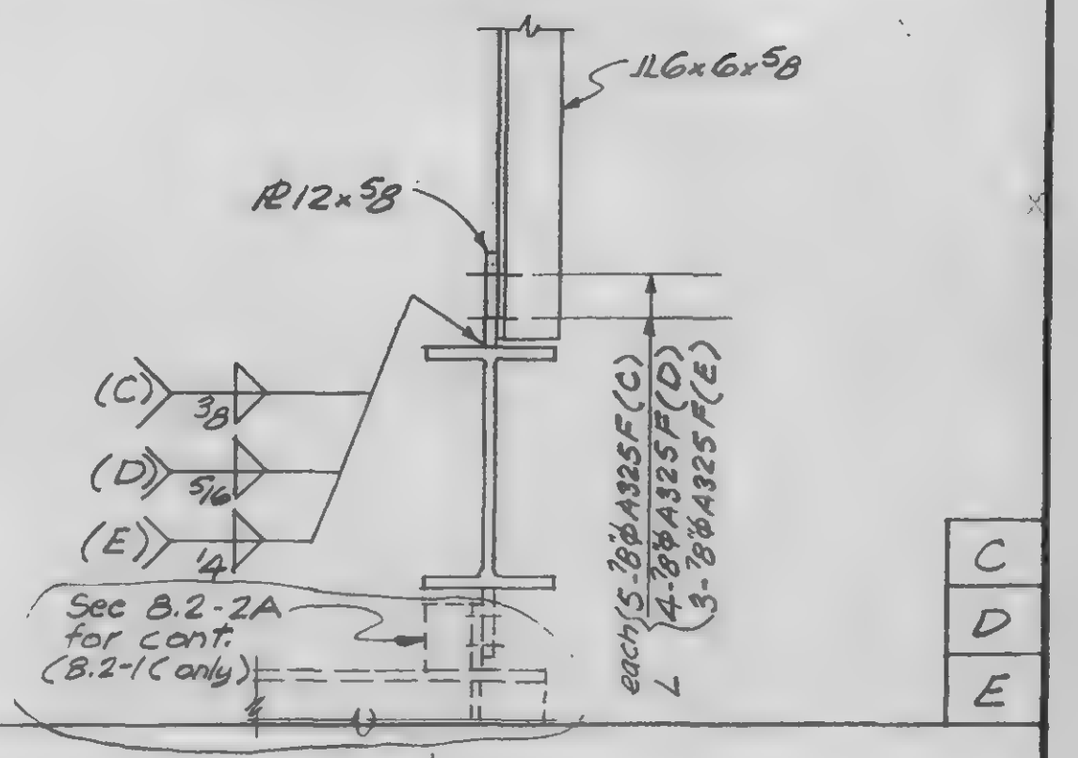

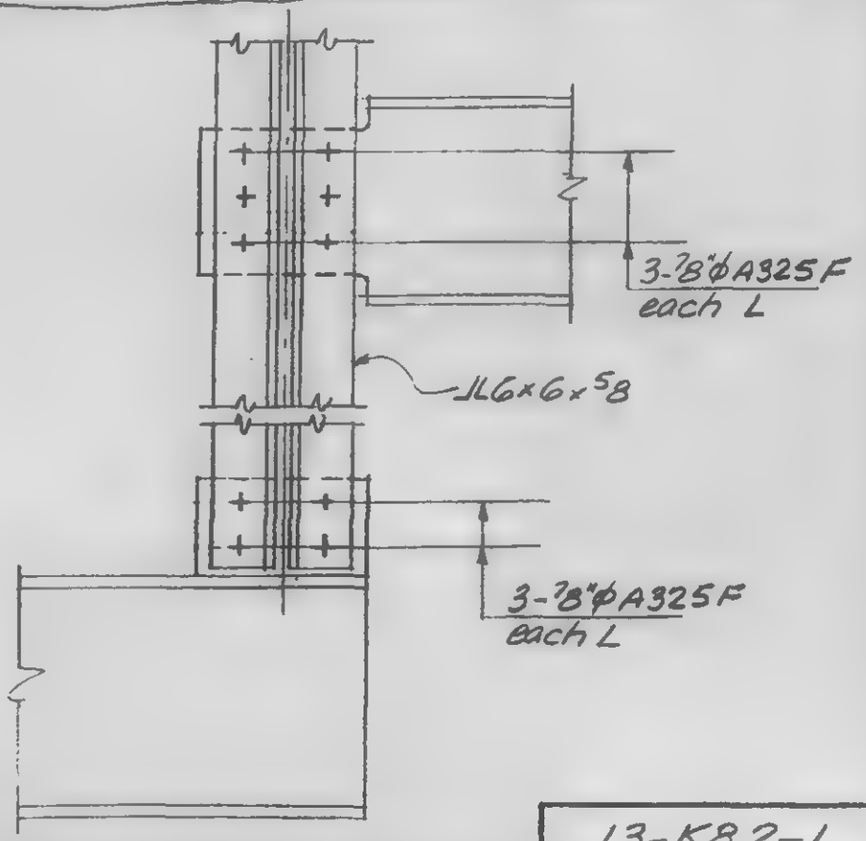

LICENSED PROFESSIONAL ENGINEER — LESLIE E. ROBERTSON — No. 34360 — UNIVERSITY OF THE STATE OF NEW YORK

DESIGNED

A.L. Franqui

13-K8.2-1

SKILLING, HELLE, CHRISTIANSEN, ROBERTSON — Structural & Civil Engineers

PROJECT: THE WORLD TRADE CENTER | TITLE: CONNECTION DETAIL - EL. 310 MECH. PLATFORM | DATE: 2-5-73

REVISIONS

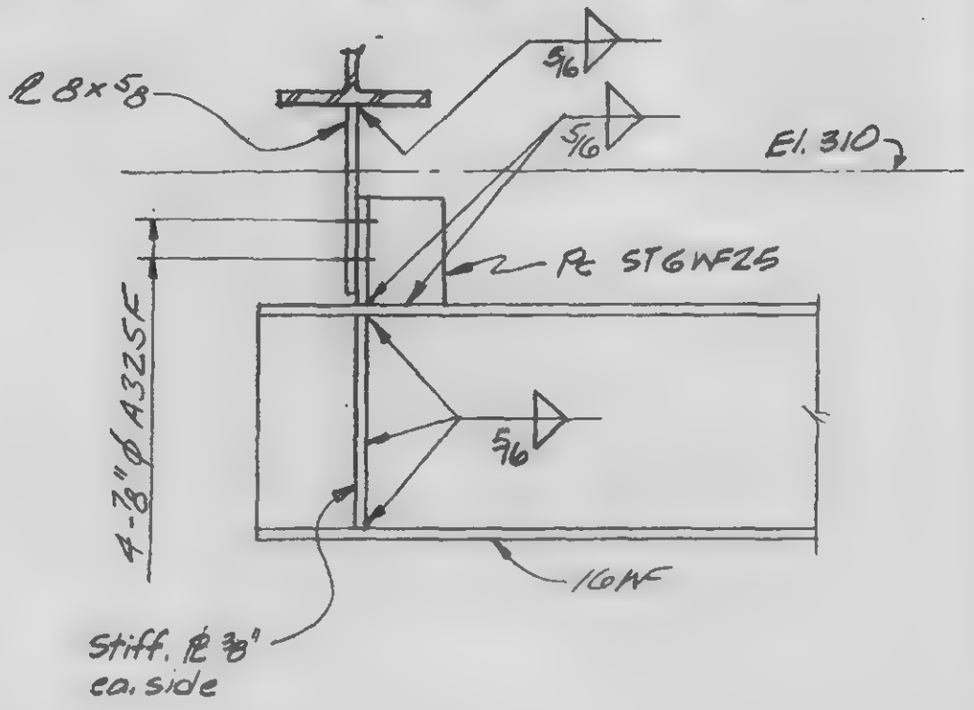

A

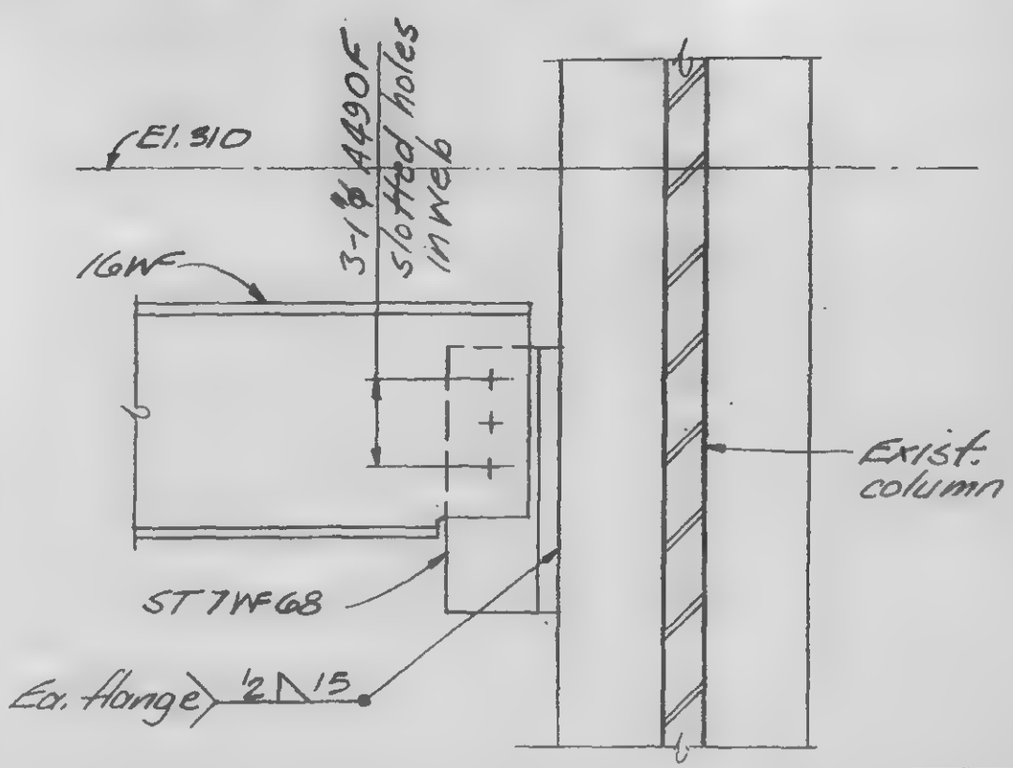

B

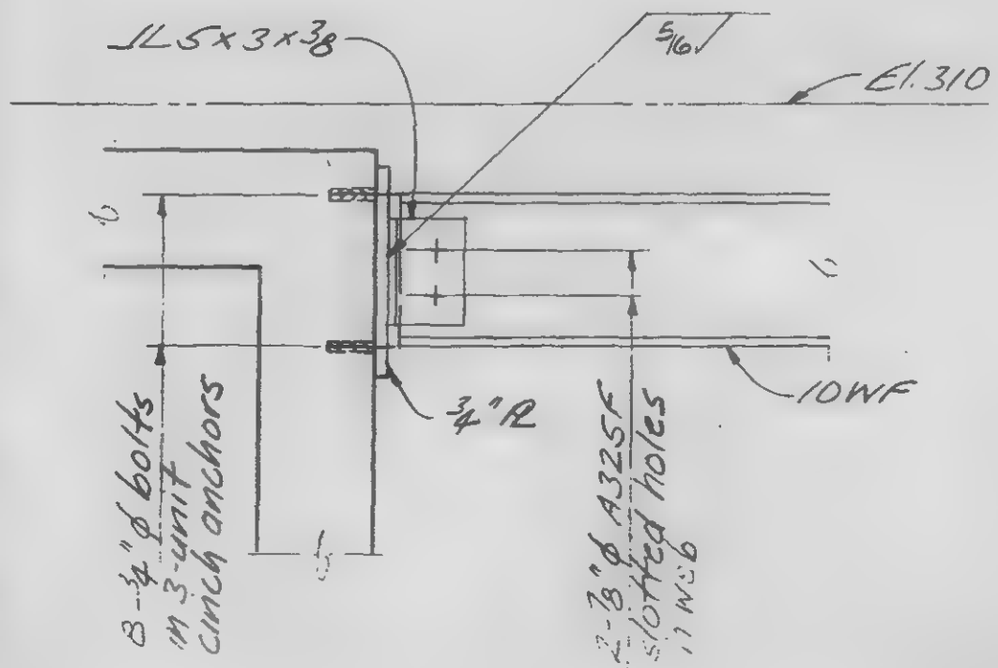

C

LICENSED PROFESSIONAL ENGINEER — LESLIE E. ROBERTSON — No 34360 — UNIVERSITY OF THE STATE OF NEW YORK

DESIGNED

DRAWN

REVIEWED

13-K8.2-2

SKILLING, HELLE, CHRISTIANSEN, ROBERTSON — Structural Engineers

PROJECT: THE WORLD TRADE CENTER | TITLE: CONNECTION DETAILS - INTERMEDIATE LEVEL | DATE: 11-3-72

REVISIONS

Released for construction 11-24-72

2-5-73

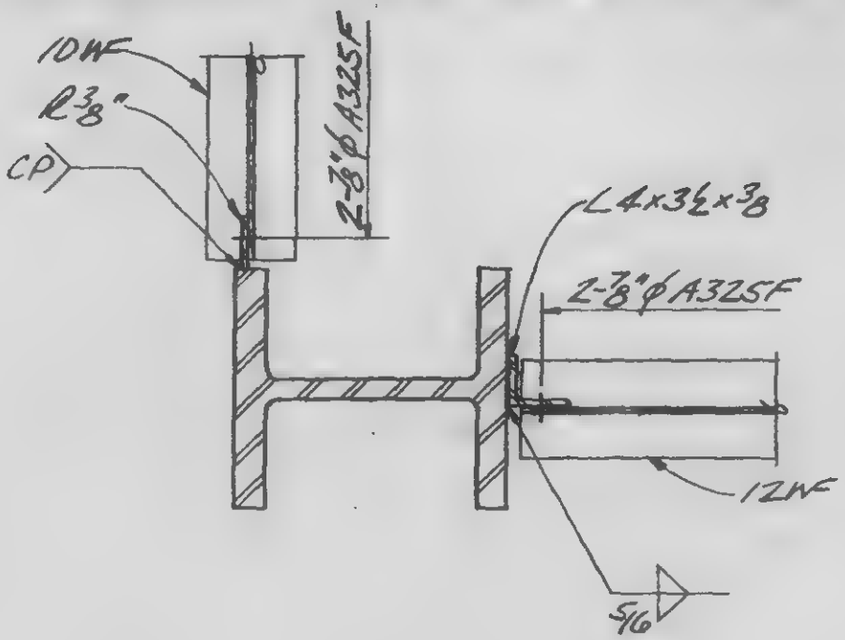

A

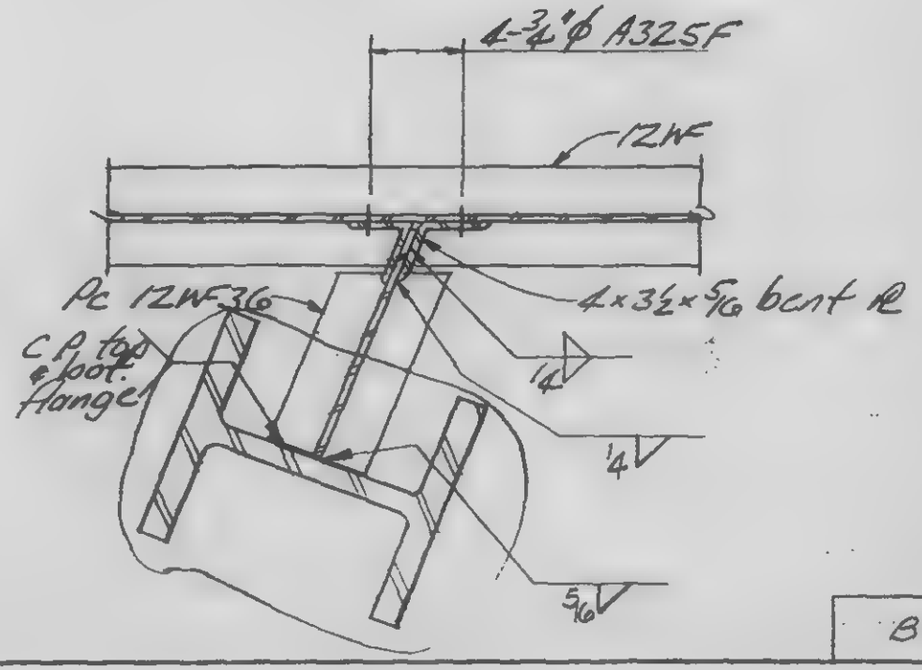

B

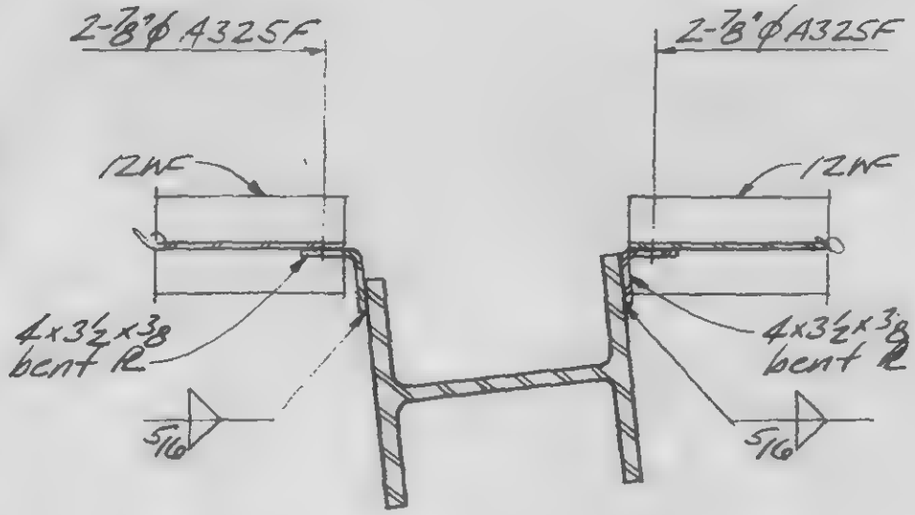

C

D

E

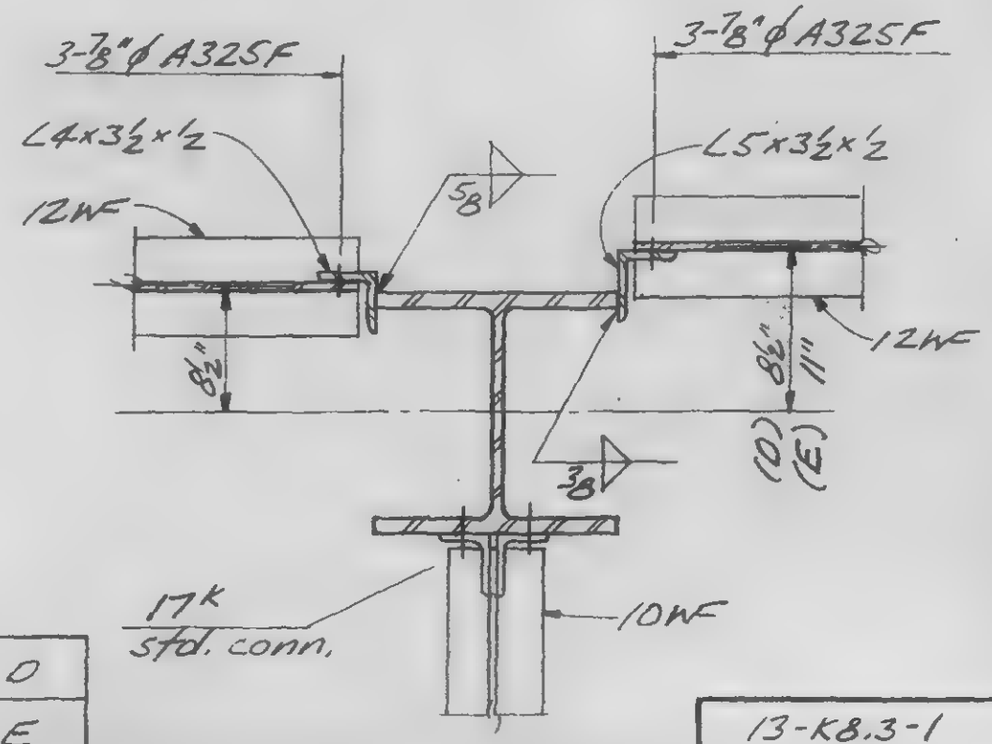

13-K8.3-1

LICENSED PROFESSIONAL ENGINEER — LESLIE E. ROBERTSON — No. 34360 — UNIVERSITY OF THE STATE OF NEW YORK

DESIGNED

DRAWN

REVIEWED

SKILLING, HELLE, CHRISTIANSEN, ROBERTSON — Structural & Civil Engineers

PROJECT: THE WORLD TRADE CENTER | TITLE: CONNECTION DETAILS INTERMEDIATE LEVEL | DATE: 11-3-72

REVISIONS

Released for Construction 11-24-72

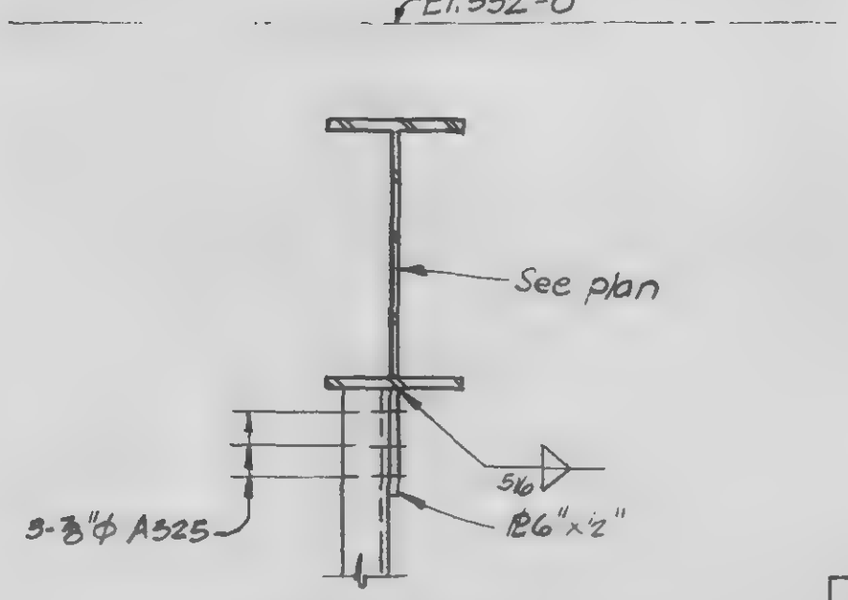

A

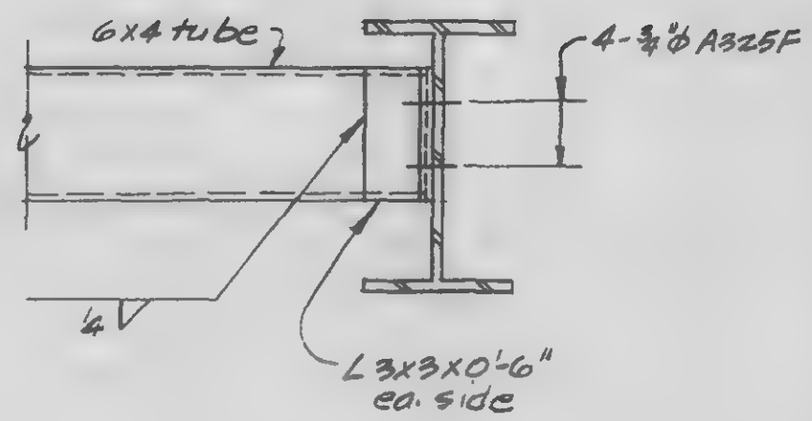

C

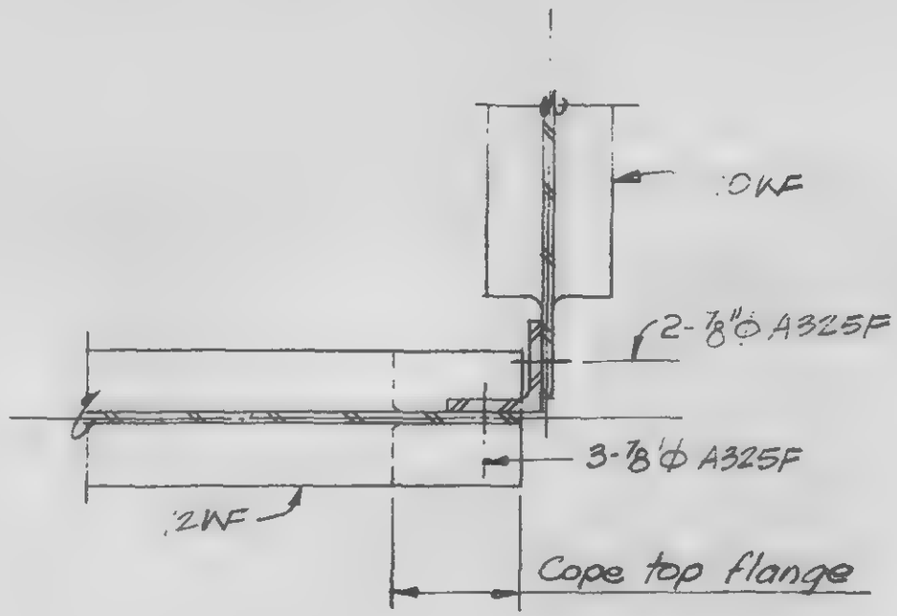

B

13-K8.3-2

LICENSED PROFESSIONAL ENGINEER — LESLIE E. ROBERTSON — No. 34960 — UNIVERSITY OF THE STATE OF NEW YORK

DESIGNED

DRAWN

REVIEWED

SKILLING, HELLE, CHRISTIANSEN, ROBERTSON — Structural & Civil Engineers

PROJECT THE WORLD TRADE CENTER | TITLE INTERMEDIATE LEVEL DETAILS | DATE 11-24-72

REVISIONS

Released for construction 11-24-72

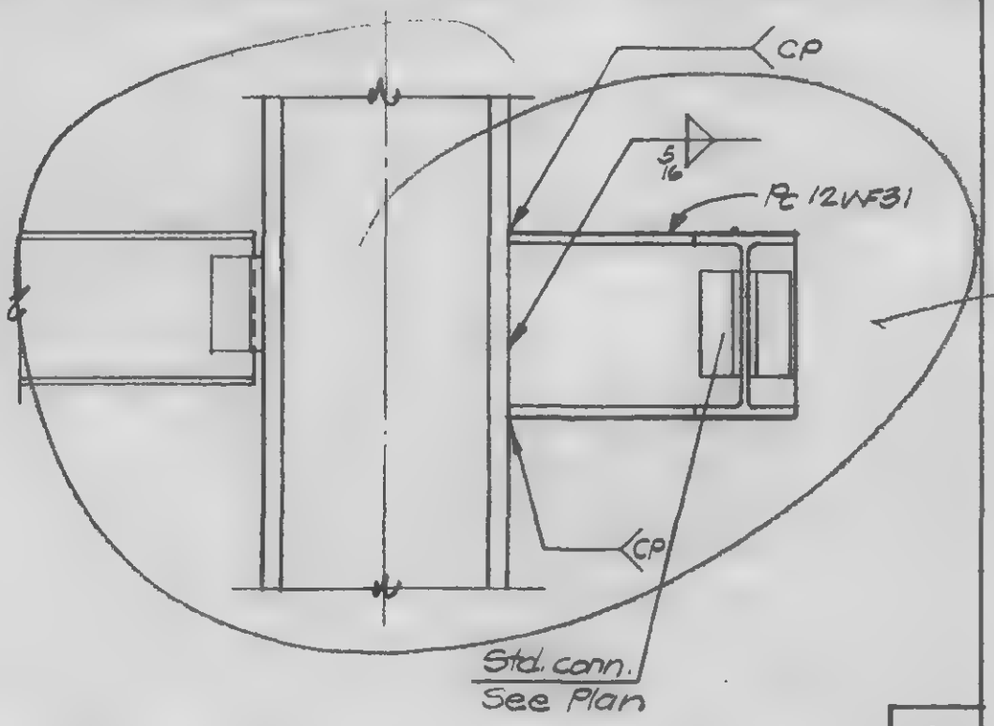

A

Col. turned 90°

See Levinson shop dwg. V3256, Sect. X

LICENSED PROFESSIONAL ENGINEER
LESLIE E. ROBERTSON
No 34360
UNIVERSITY OF THE STATE OF NEW YORK

DESIGNED

DRAWN

REVIEWED

13-K8.3-3

SKILLING, HELLE, CHRISTIANSEN, ROBERTSON — Structural & Civil Engineers

PROJECT: THE WORLD TRADE CENTER | TITLE: INTERMEDIATE LEVEL DETAILS | DATE: 11-24-72

REVISIONS

Released for construction 11-24-72

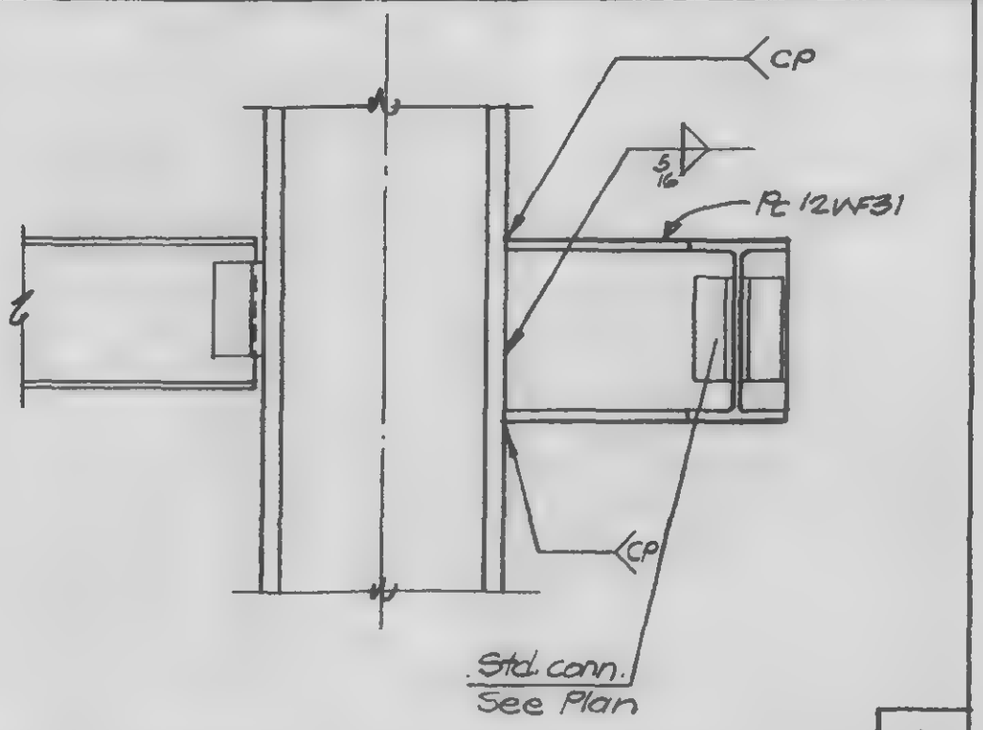

A

LICENSED PROFESSIONAL ENGINEER
LESLIE E. ROBERTSON
No. 34360
UNIVERSITY OF THE STATE OF NEW YORK

DESIGNED

DRAWN

REVIEWED

13-K8.3-3

SKILLING, HELLE, CHRISTIANSEN, ROBERTSON — Structural & Civil Engineers

PROJECT: THE WORLD TRADE CENTER | TITLE: BRACING 310-332 ELEVATIONS | DATE: 11-3-72

REVISIONS

Released for construction 11-20-72

12-11-72

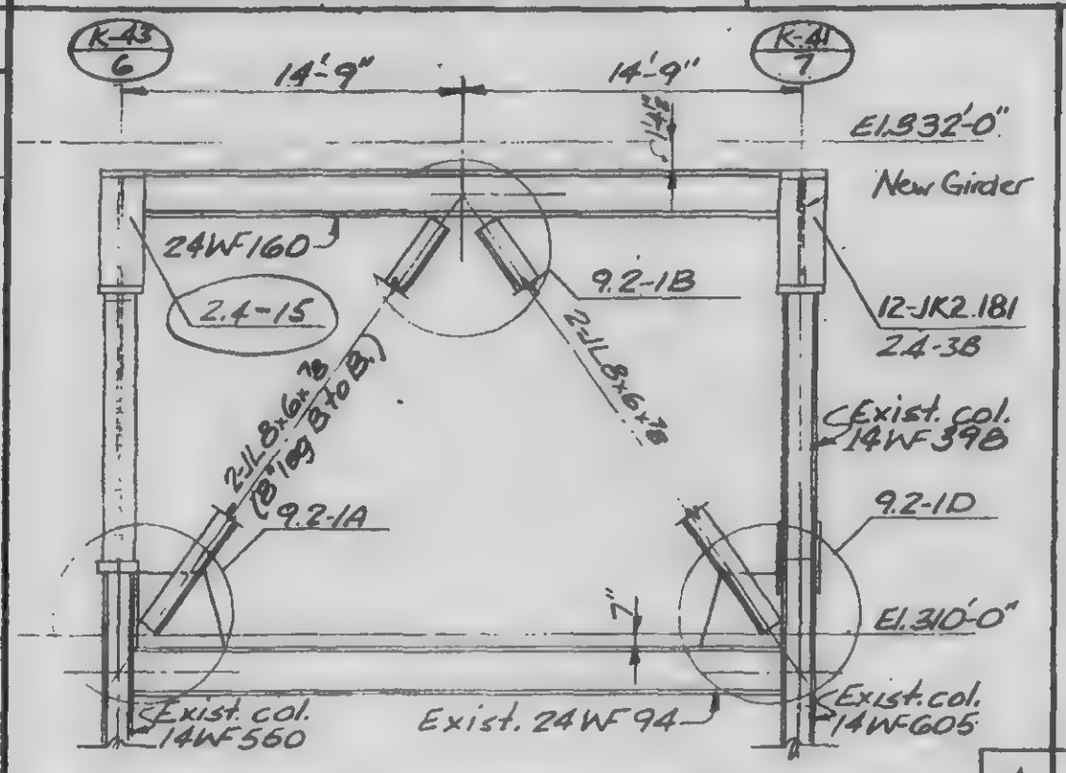

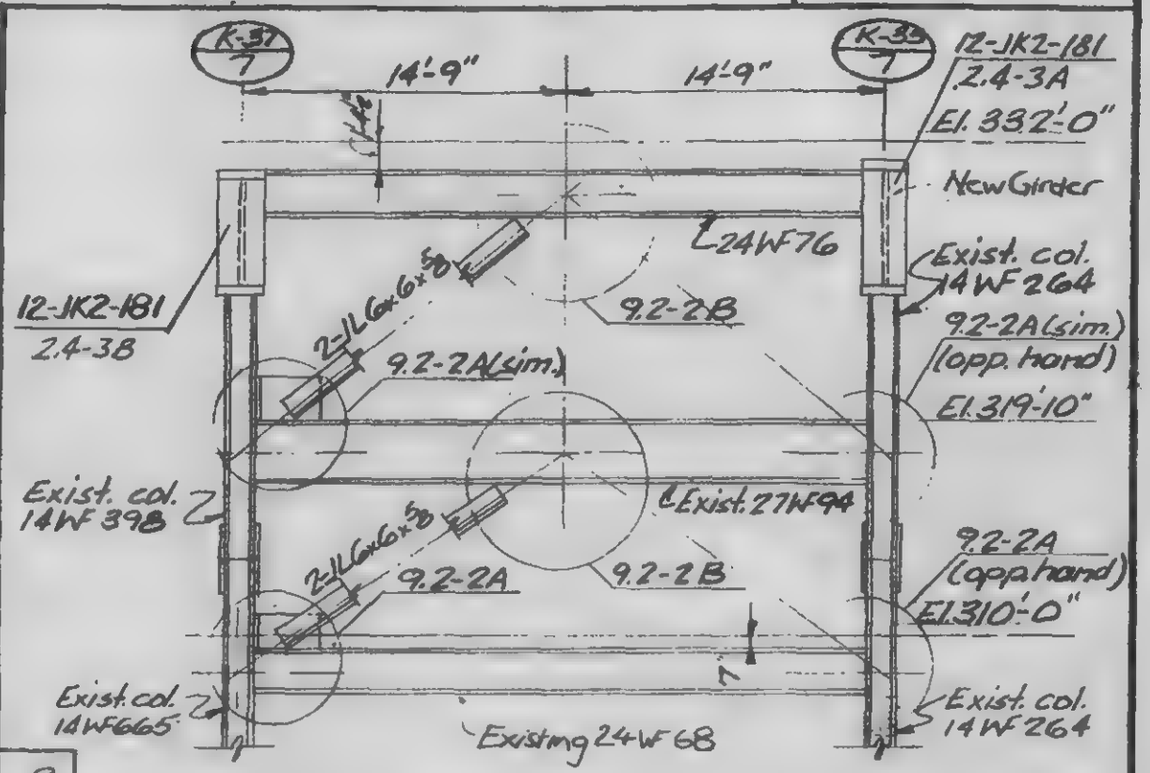

A	B
C	D

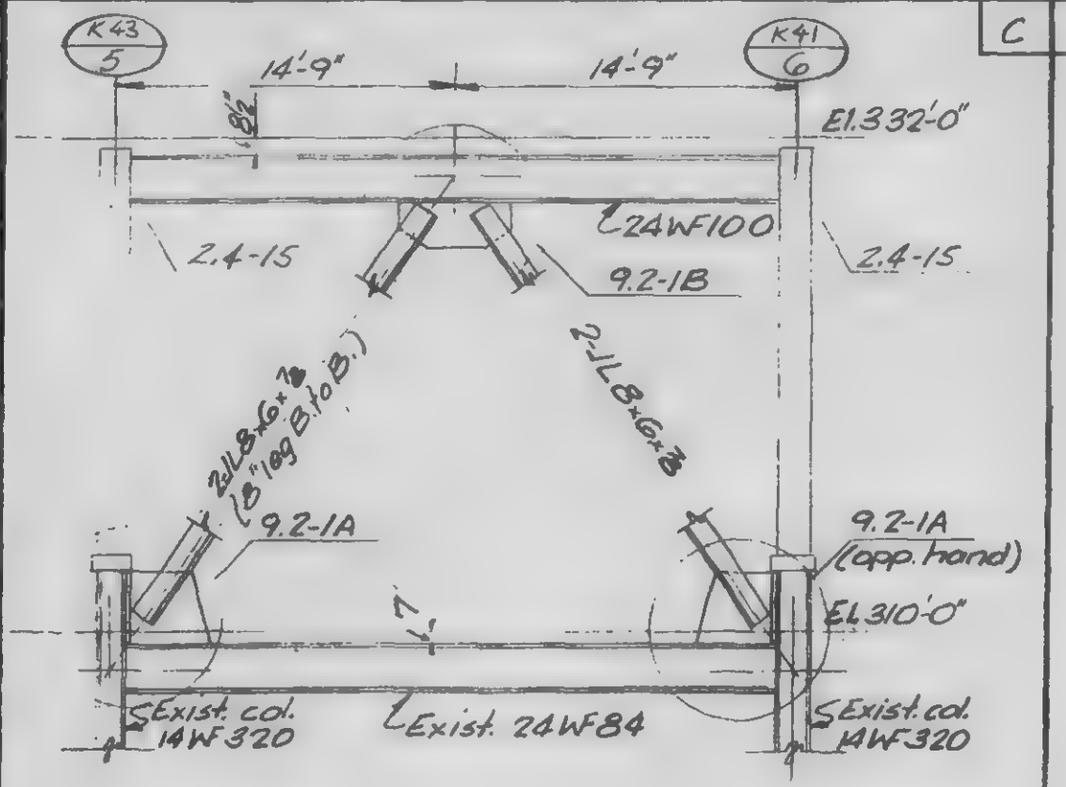

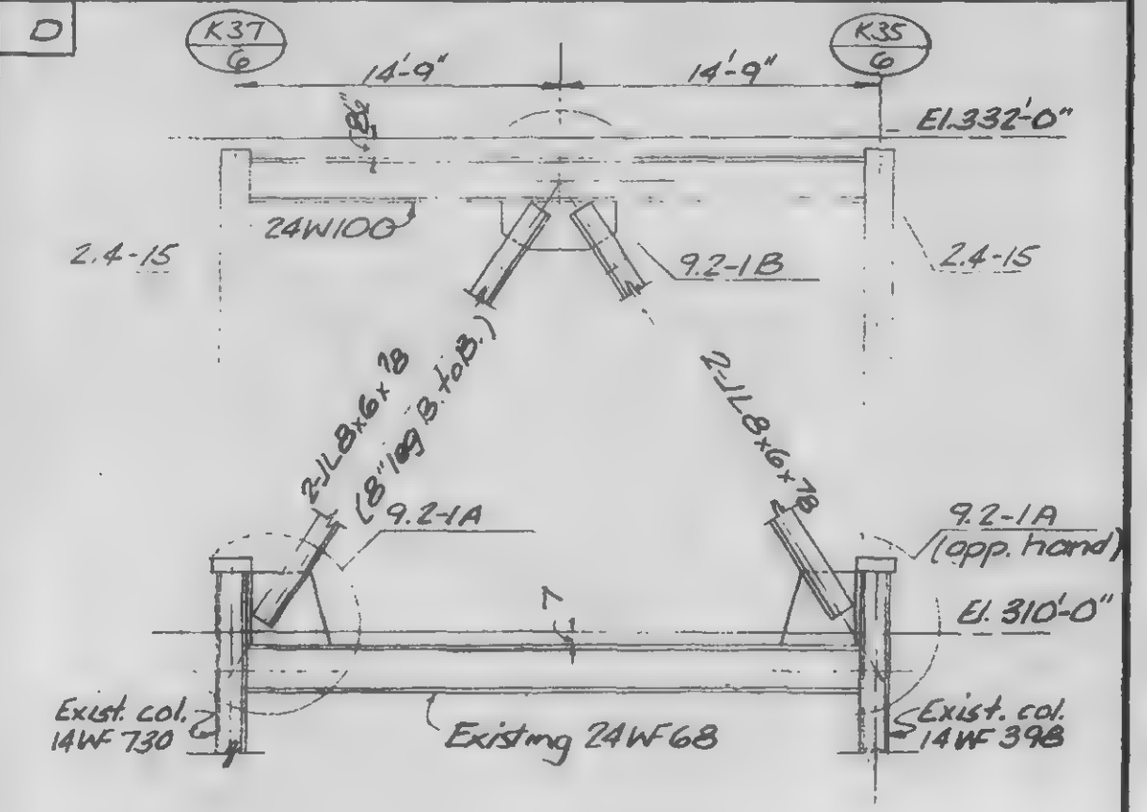

LICENSED PROFESSIONAL ENGINEER — LESLIE E. ROBERTSON — No. 34360 — UNIVERSITY OF THE STATE OF NEW YORK

DESIGNED

DRAWN J Banks

REVIEWED

13-K9.1-1

SKILLING, HELLE, CHRISTIANSEN, ROBERTSON — Structural & Civil Engineers

PROJECT THE WORLD TRADE CENTER | TITLE BRACING 310-332 ELEVATIONS | DATE 11-3-72

REVISIONS

Released for construction 11-20-72

4-20-73

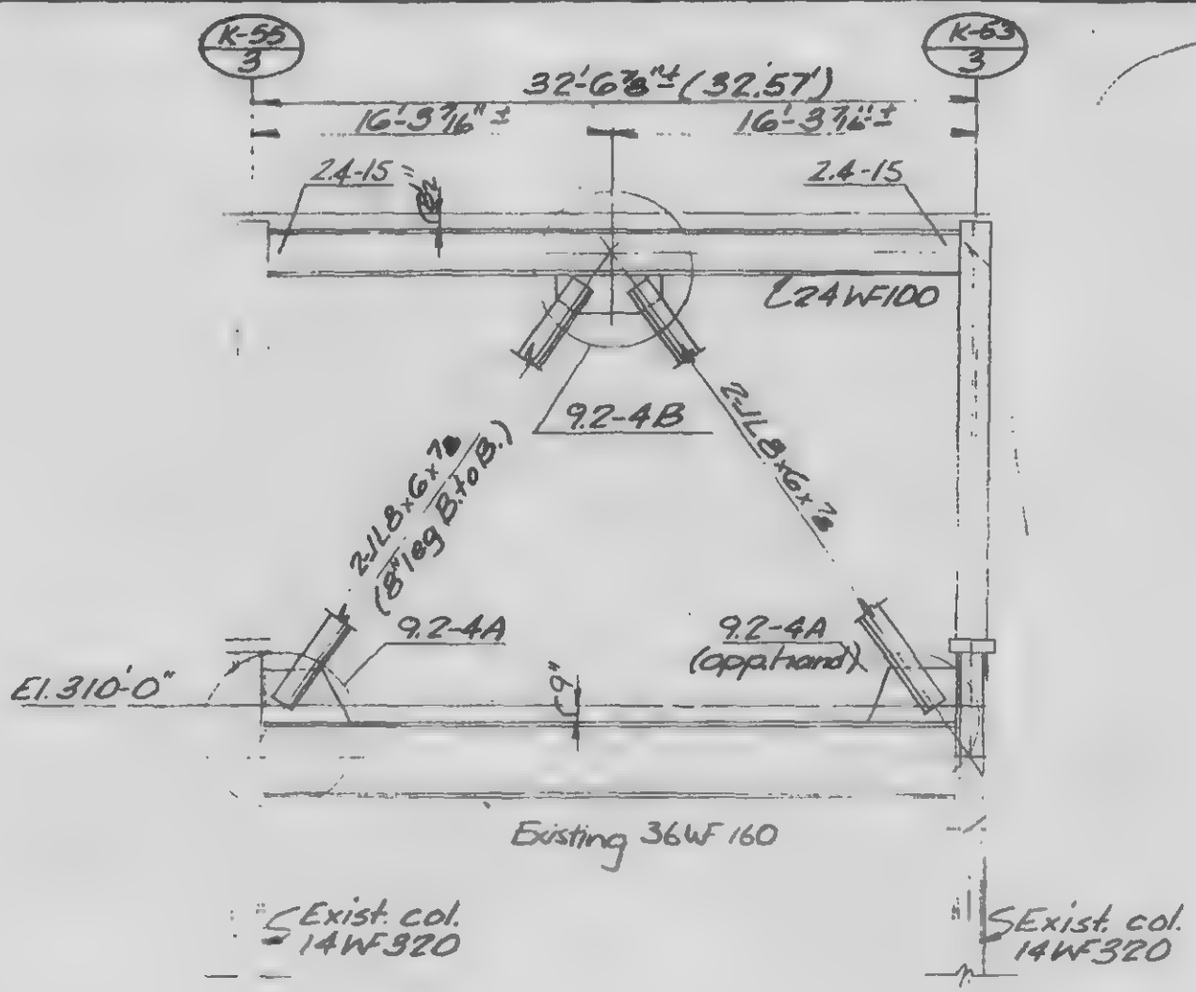

LICENSED PROFESSIONAL ENGINEER — LESLIE E. ROBERTSON — No 34960 — UNIVERSITY OF THE STATE OF NEW YORK

DESIGNED

DRAWN J.S.

REVIEWED

13-K9.1-2

SKILLING, HELLE, CHRISTIANSEN, ROBERTSON — Structural & Civil Engineers

PROJECT THE WORLD TRADE CENTER | TITLE BRACING 310-332 DETAILS | DATE 11-3-72

REVISIONS

Released for construction 11-20-72

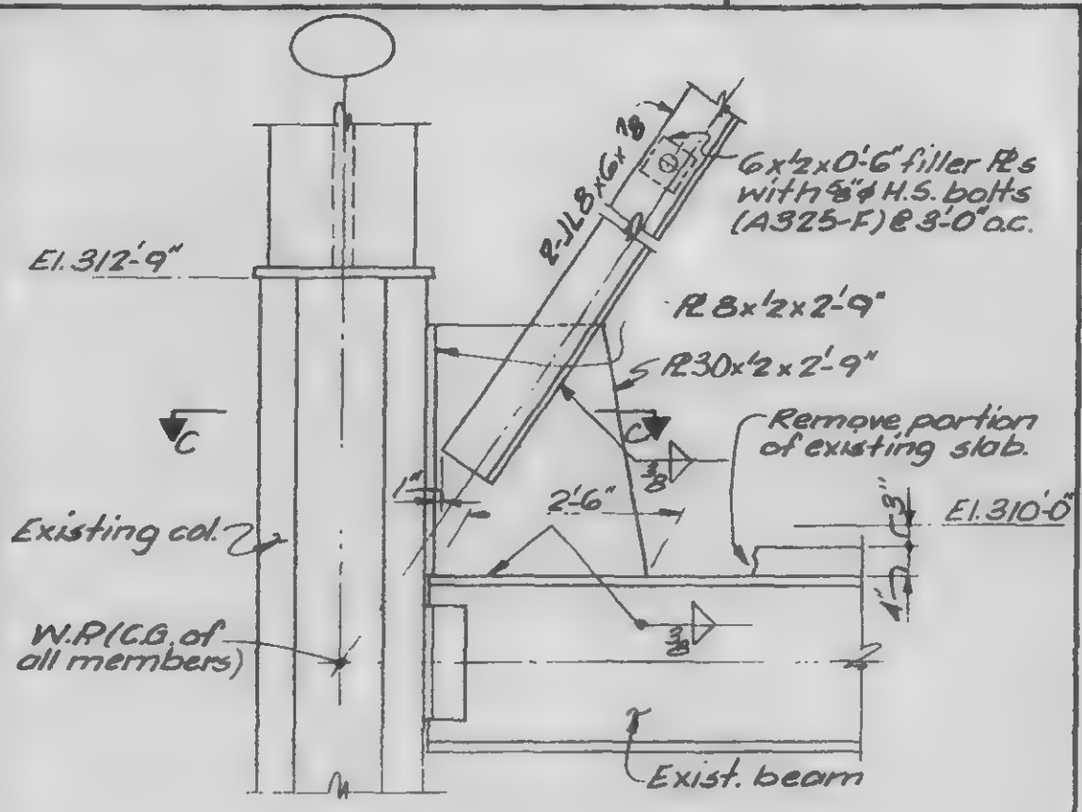

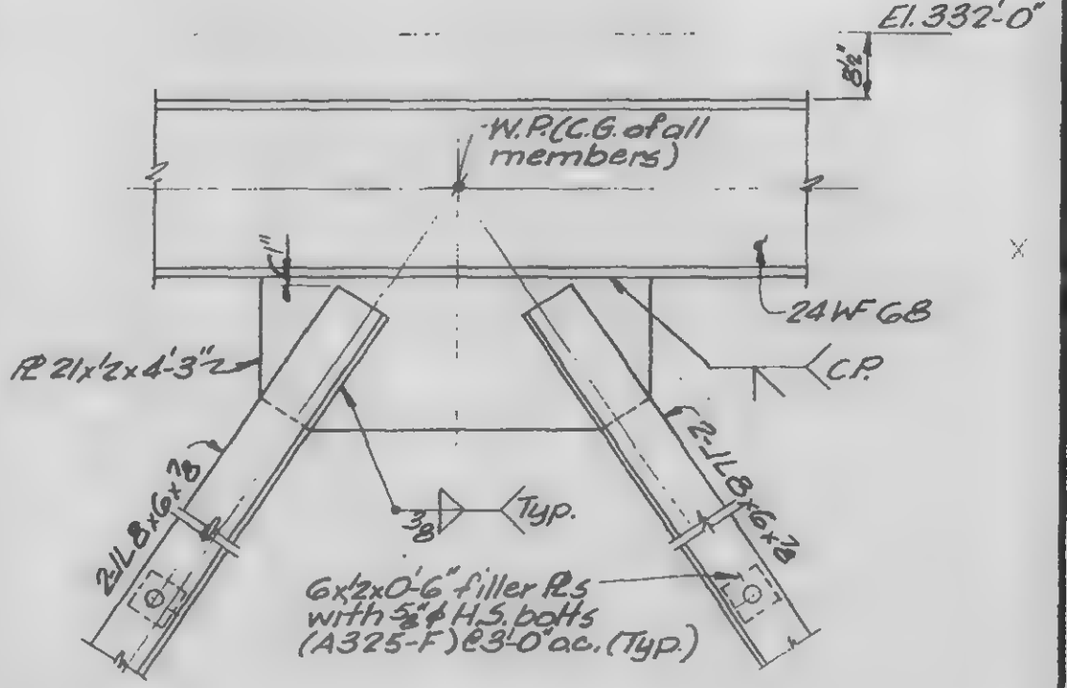

A	B
C	D

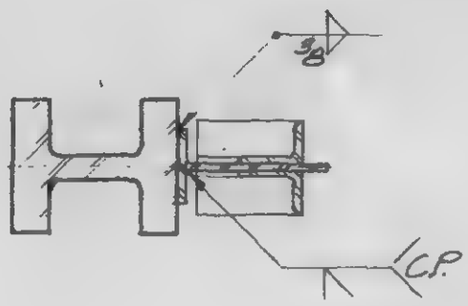

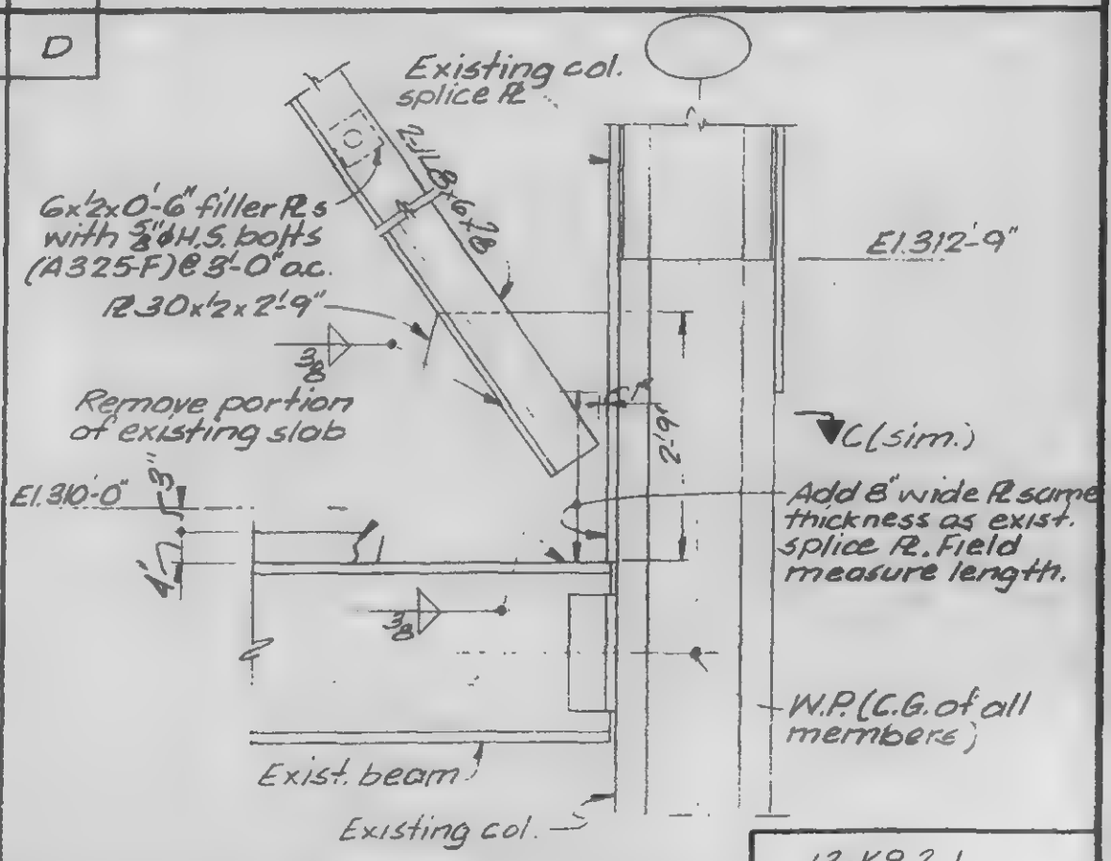

LICENSED PROFESSIONAL ENGINEER — LESLIE E. ROBERTSON — No 34360 — UNIVERSITY OF THE STATE OF NEW YORK

DESIGNED

DRAWN TR

REVIEWED

13-K9.2-1

SKILLING, HELLE, CHRISTIANSEN, ROBERTSON — Structural & Civil Engineers

PROJECT: THE WORLD TRADE CENTER

TITLE: BRACING 310-332 DETAILS

DATE: 11-3-72

REVISIONS

Released for construction 11-20-72

4-20-73

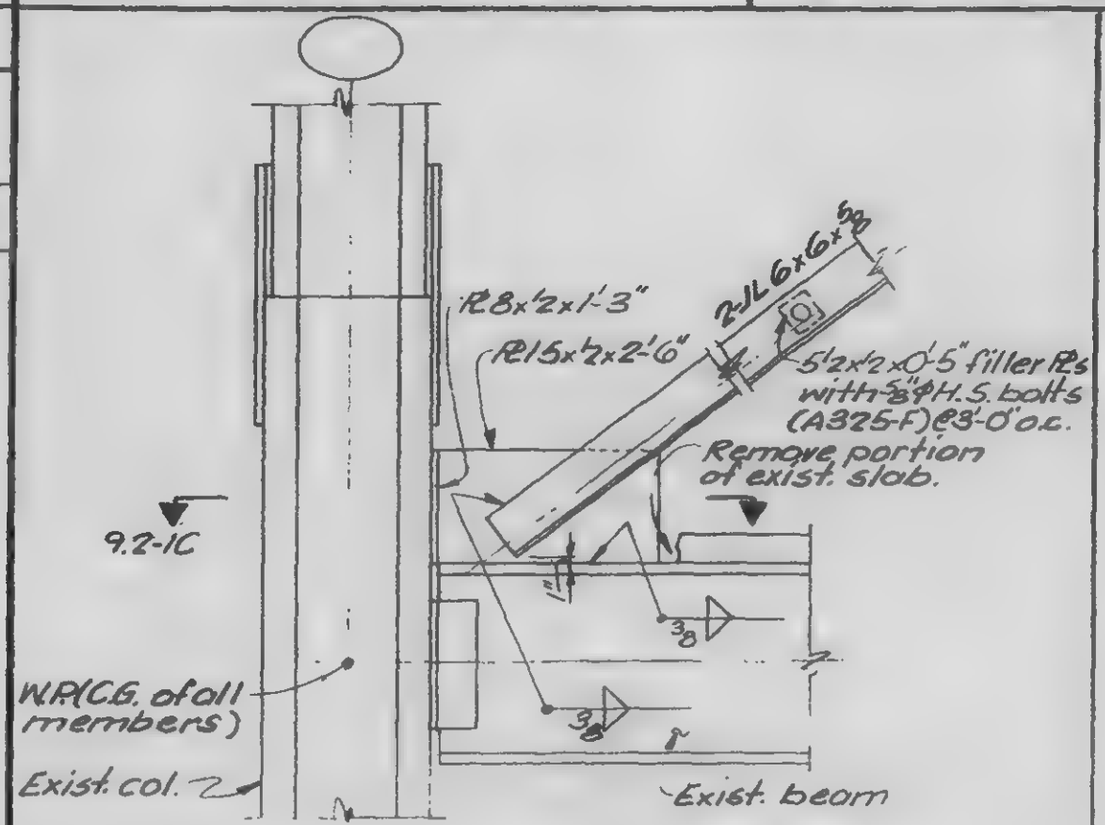

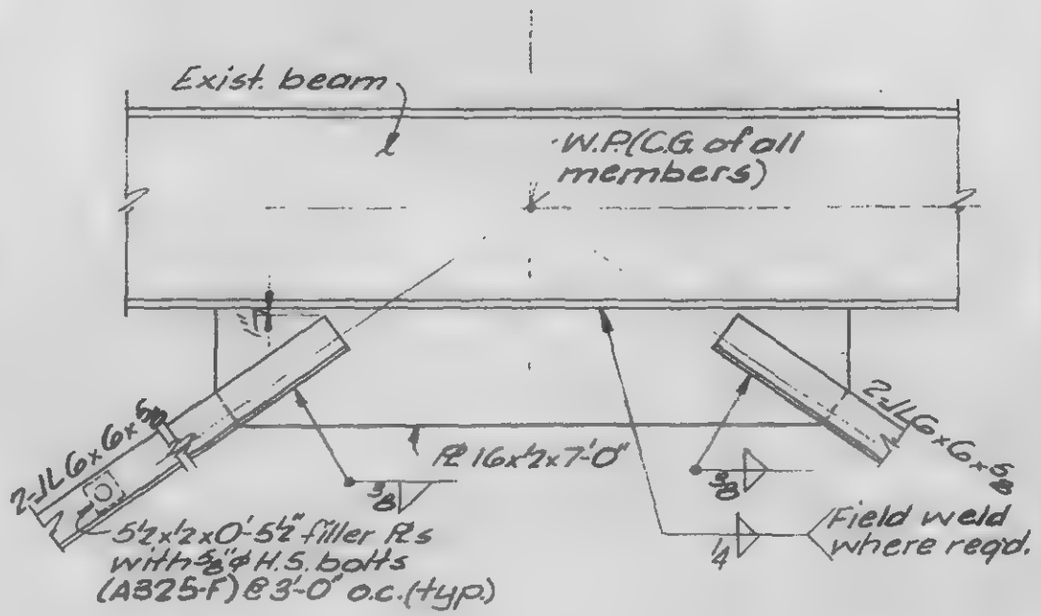

A | B

LICENSED PROFESSIONAL ENGINEER — LESLIE E. ROBERTSON — No 34360 — UNIVERSITY OF THE STATE OF NEW YORK

DRAWN TR

REVIEWED

13-K9.2-2

SKILLING, HELLE, CHRISTIANSEN, ROBERTSON — Structural & Civil Engineers

PROJECT THE WORLD TRADE CENTER | TITLE BRACING 310-332 DETAILS | DATE 11-3-72

REVISIONS

Released for construction 11-20-72

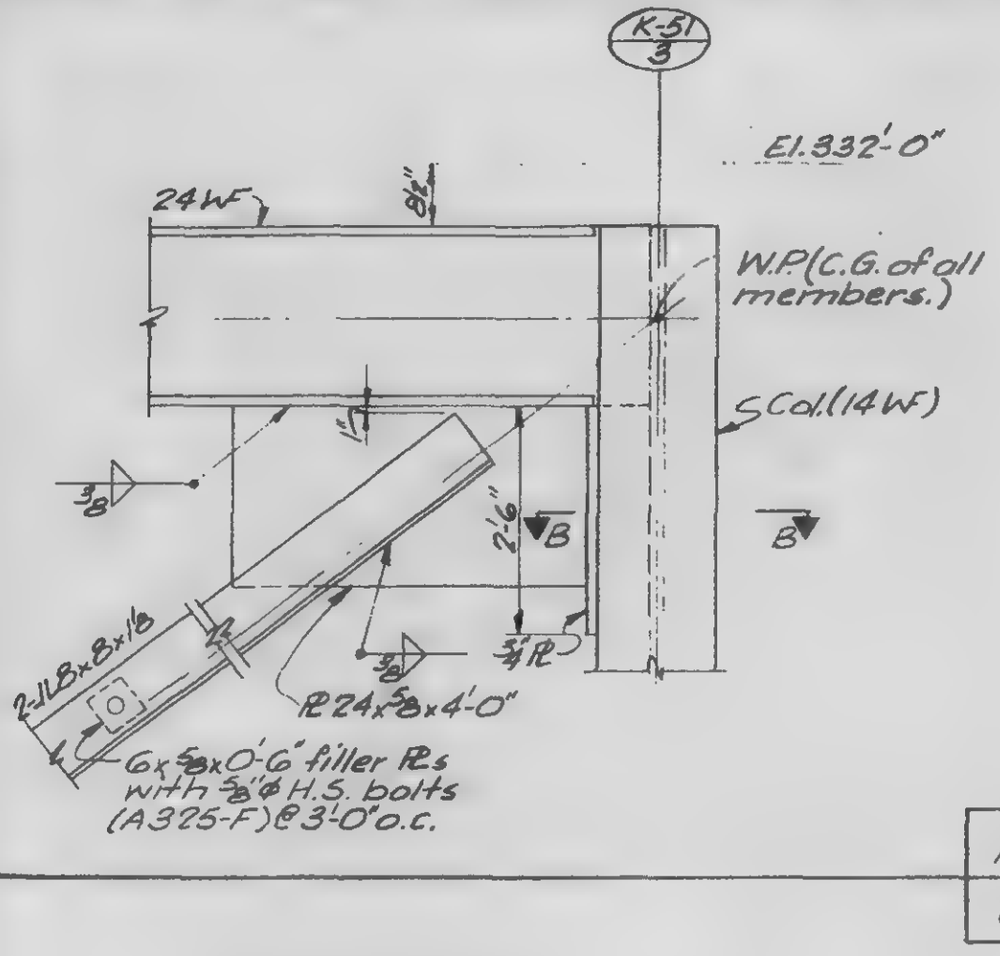

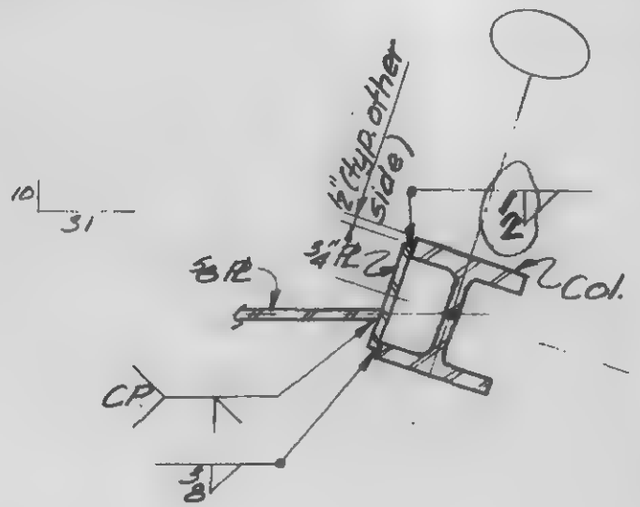

A	B
C	D

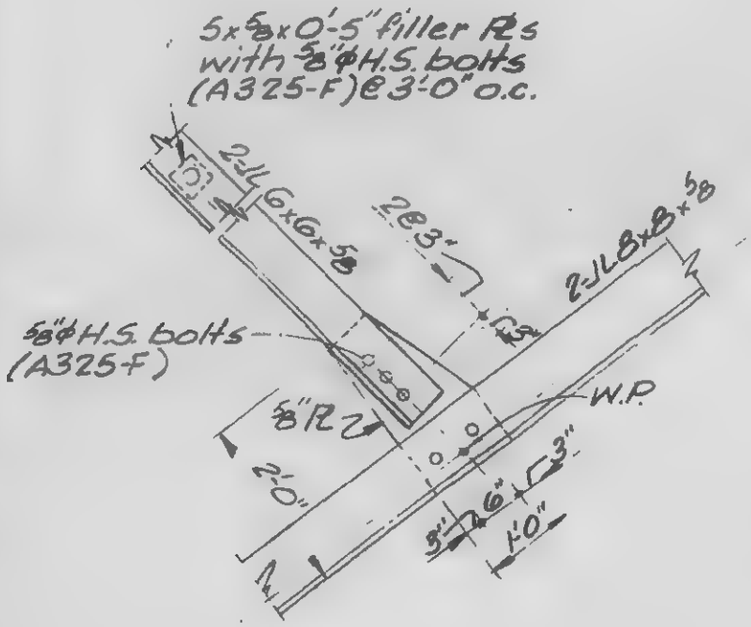

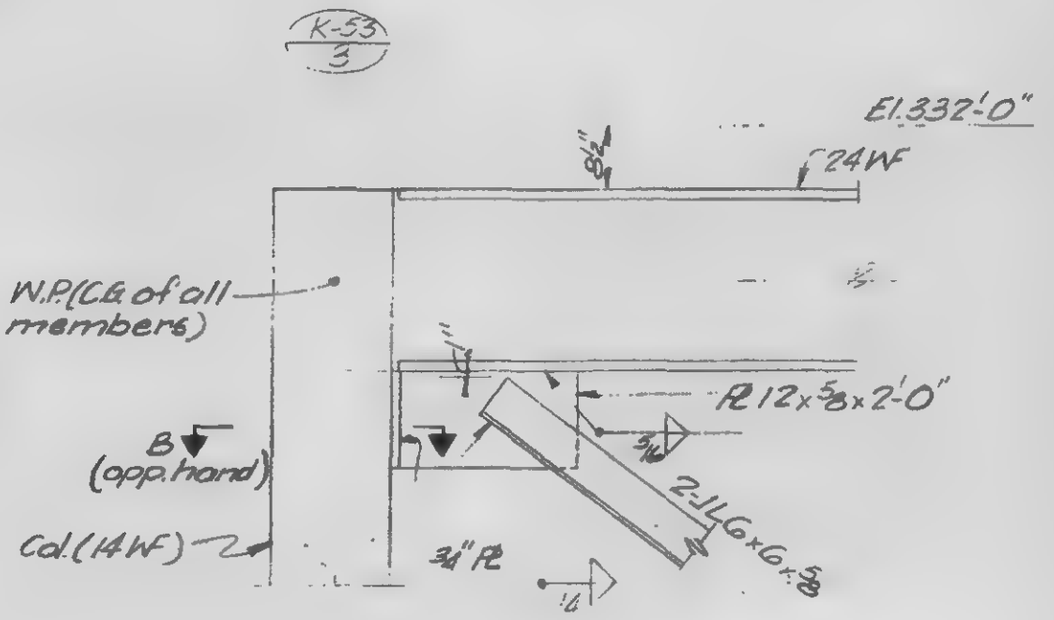

LICENSED PROFESSIONAL ENGINEER — LESLIE E. ROBERTSON — No. 34360 — UNIVERSITY OF THE STATE OF NEW YORK

DESIGNED

DRAWN TR

REVIEWED

13-K9.2-3

SKILLING, HELLE, CHRISTIANSEN, ROBERTSON — Structural & Civil Engineers

PROJECT THE WORLD TRADE CENTER | TITLE BRACING 310-332 DETAILS | DATE 11-3-72

REVISIONS

Released for construction 11-20-72

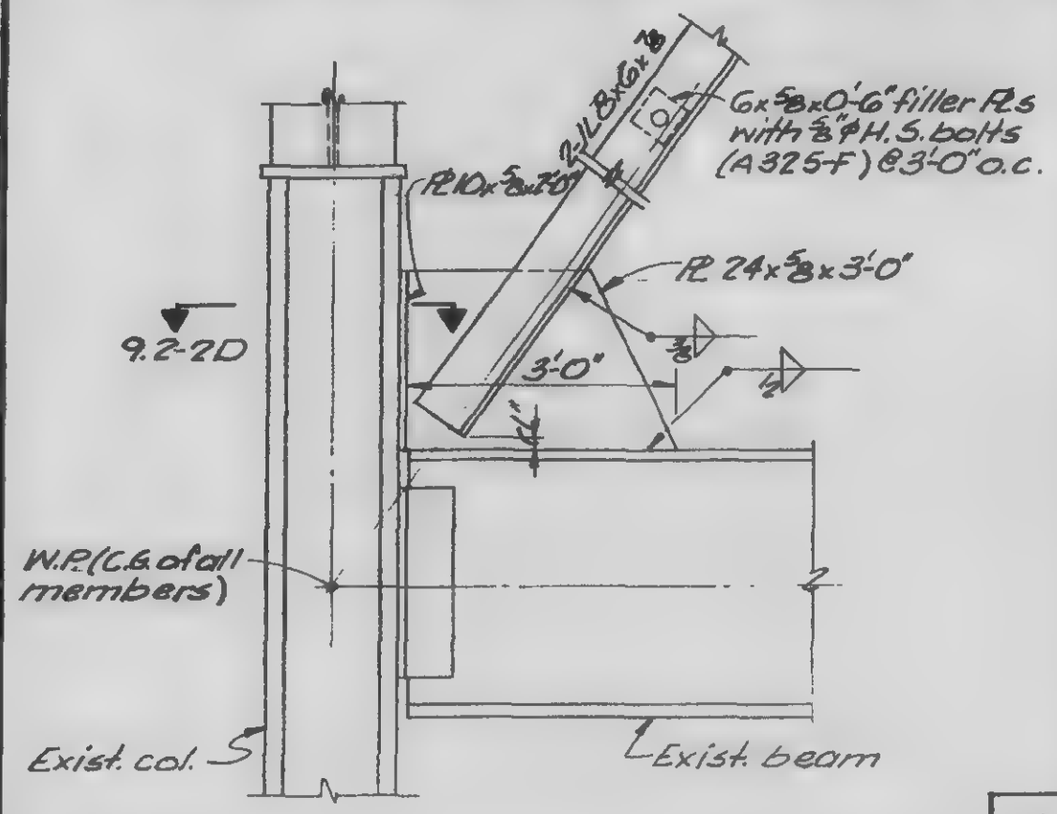

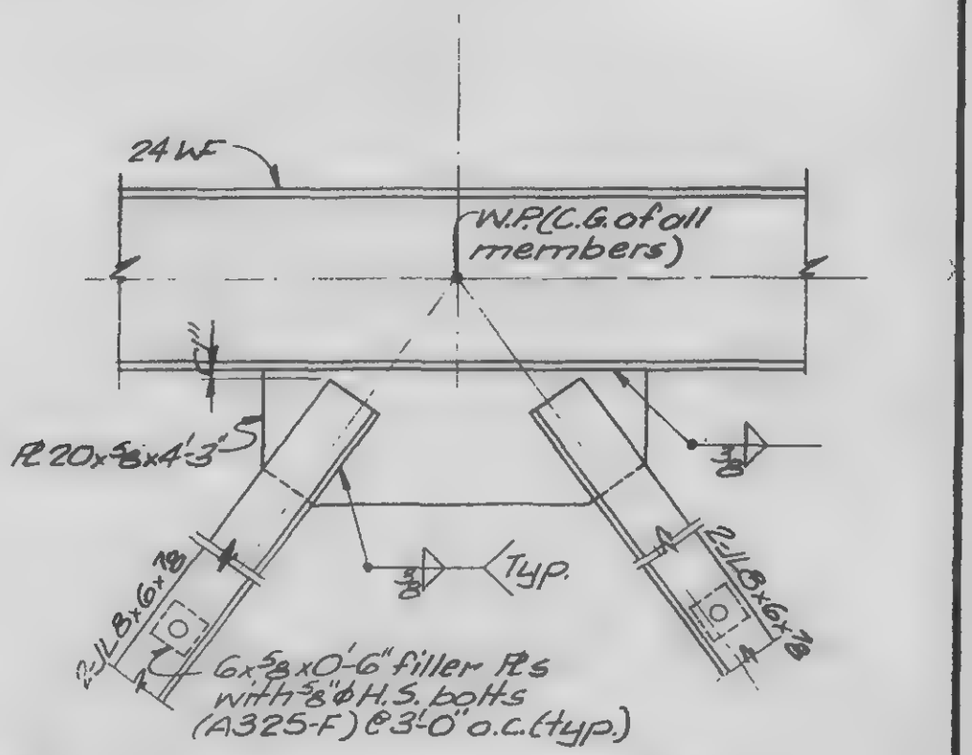

A	B

DESIGNED

DRAWN TR

REVIEWED

LICENSED PROFESSIONAL ENGINEER LESLIE E. ROBERTSON No. 34360 UNIVERSITY OF THE STATE OF NEW YORK

13-K 9.2-4

SKILLING, HELLE, CHRISTIANSEN, ROBERTSON — Structural & Civil Engineers

PROJECT: THE WORLD TRADE CENTER | TITLE: NOTCH & NEW SUPPORT FOR EXIST. BEAMS-ELEVATION | DATE: 3-15-73

REVISIONS

5-7-73

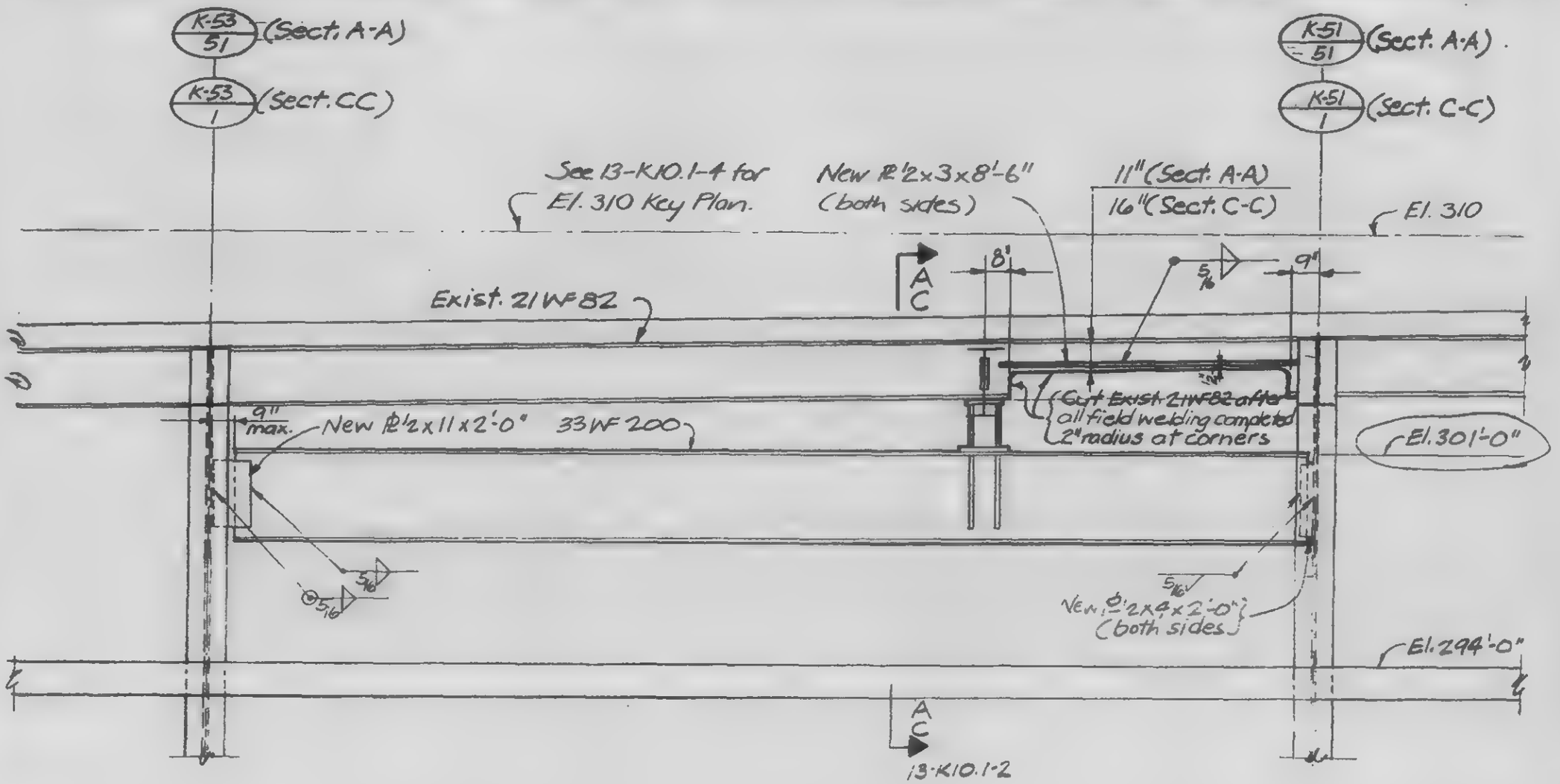

LICENSED PROFESSIONAL ENGINEER — LESLIE E. ROBERTSON — No 34360 — UNIVERSITY OF THE STATE OF NEW YORK

DESIGNED: JTM

DRAWN: [illegible]

REVIEWED

A C

13-K10.1-1

SKILLING, HELLE, CHRISTIANSEN, ROBERTSON — Structural & Civil Engineers

PROJECT: THE WORLD TRADE CENTER | TITLE: NOTCH & NEW SUPPORT FOR EXIST. BEAMS - SECTIONS | DATE: 3-15-73

REVISIONS

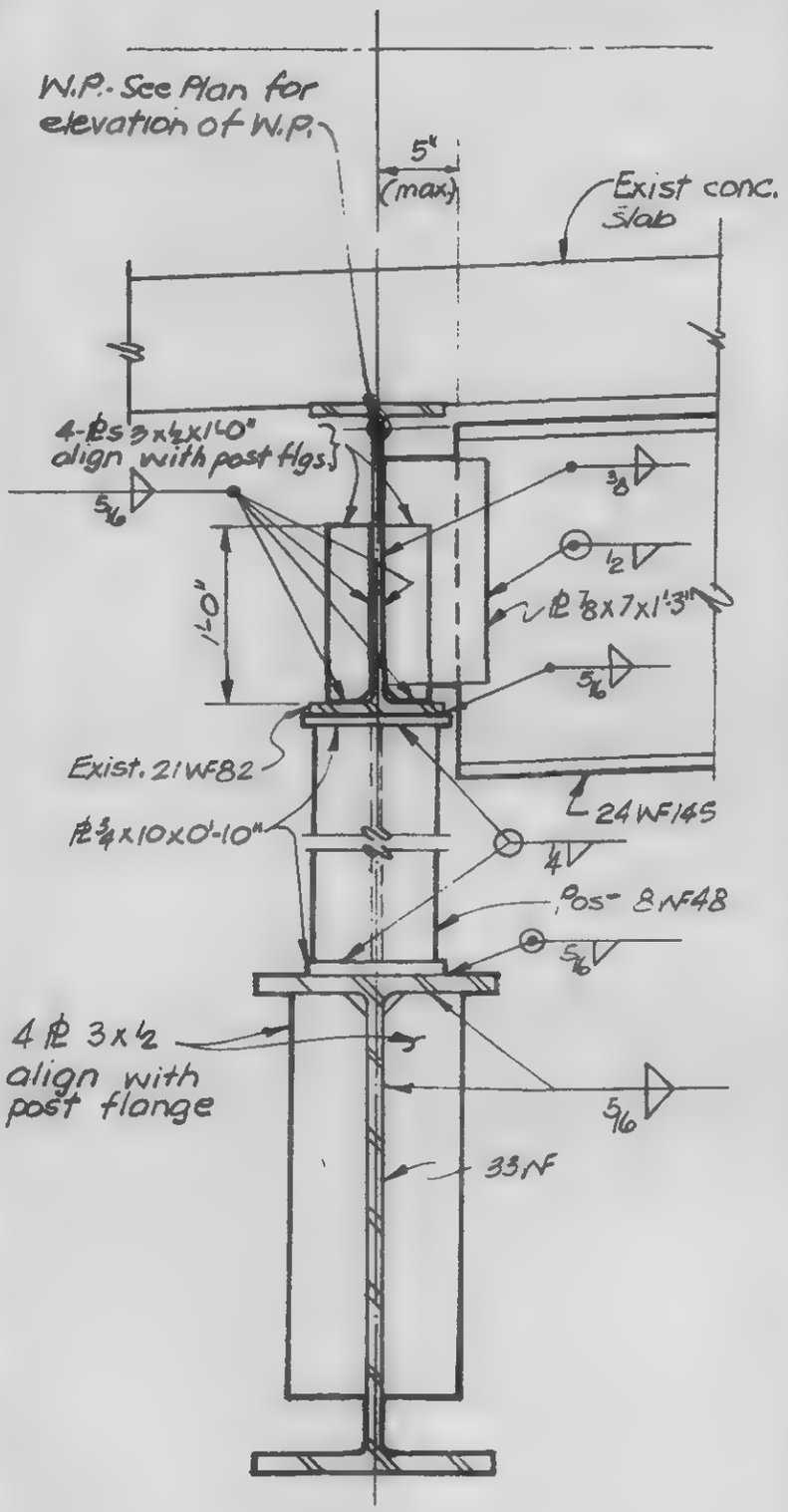

A

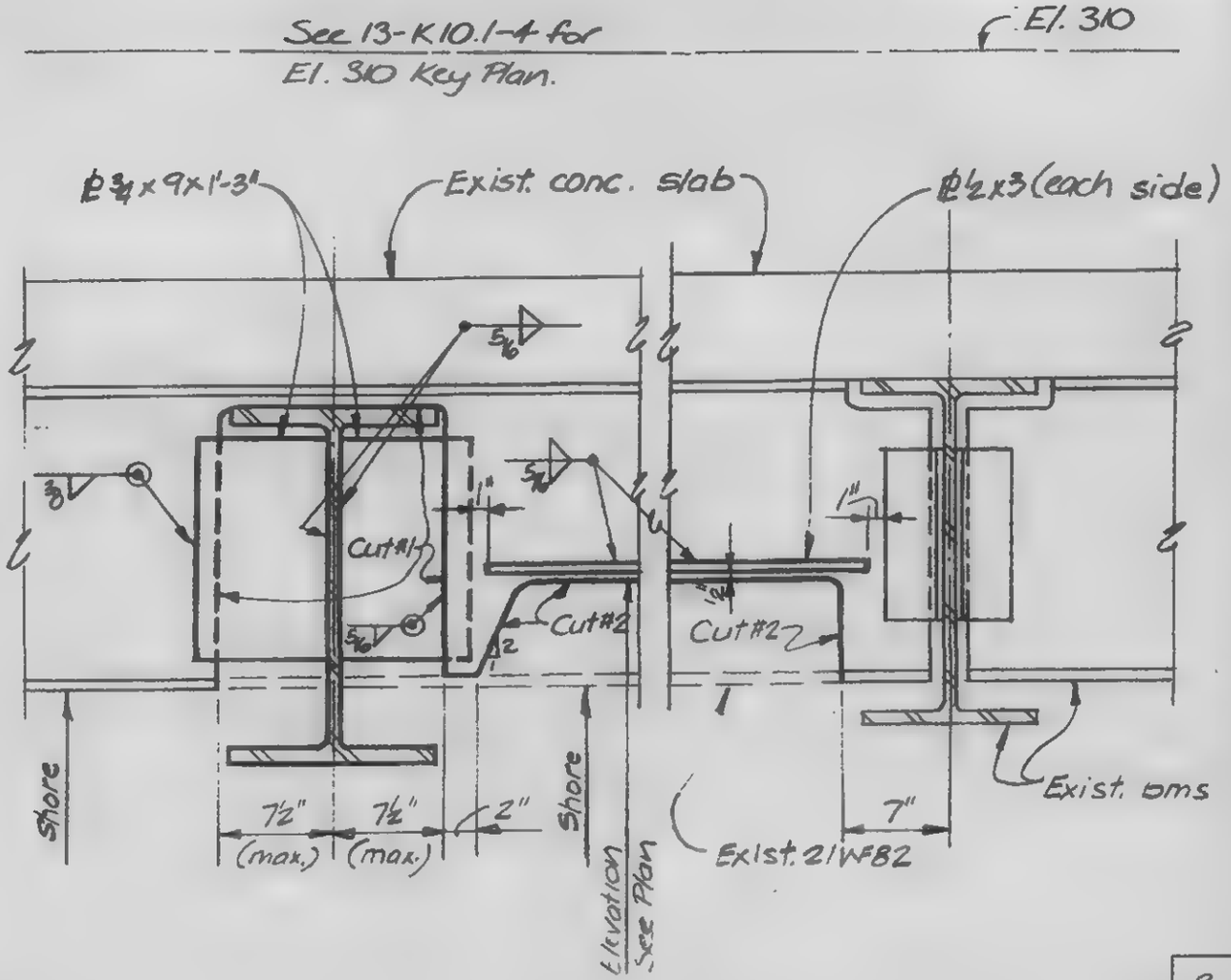

B

Construction Sequence

1. Place shores.
2. Make cut #1 (1" radius at corners)
3. Complete all steel erection and field welding.
4. Remove shores.
5. Make cut #2 (2" radius at corners)

LICENSED PROFESSIONAL ENGINEER — LESLIE E. ROBERTSON — No. 34360 — UNIVERSITY OF THE STATE OF NEW YORK

DESIGNED: JTM

DRAWN: [signature]

REVIEWED:

opp hand | C

13-K10.1-2

SKILLING, HELLE, CHRISTIANSEN, ROBERTSON — Structural & Civil Engineers

PROJECT THE WORLD TRADE CENTER | TITLE NOTCH & NEW SUPPORT FOR EXIST. BEAM - SECTION | DATE 3-15-73

REVISIONS

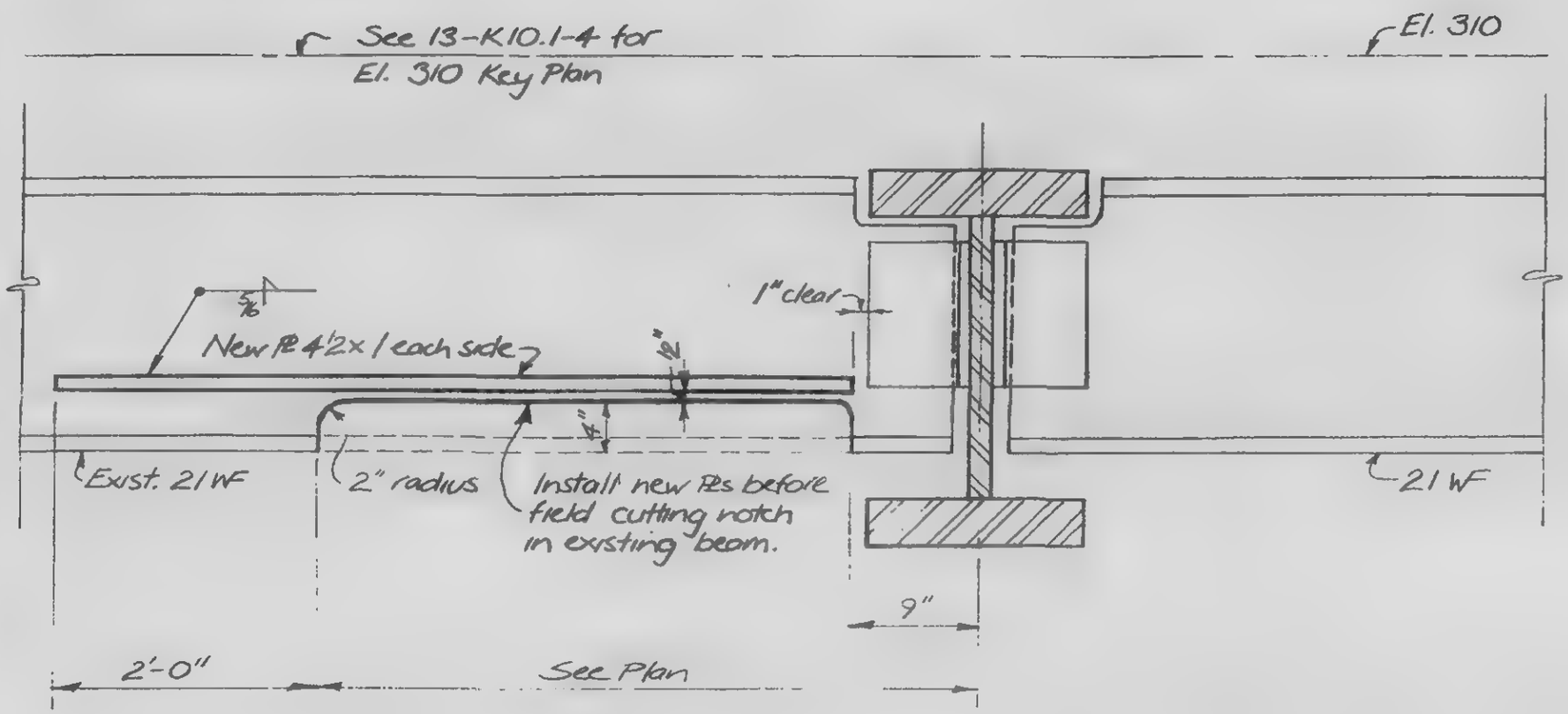

LICENSED PROFESSIONAL ENGINEER
LESLIE E. ROBERTSON
No. 34360
UNIVERSITY OF THE STATE OF NEW YORK

DESIGNED

DRAWN

13-K10.1-3

SKILLING, HELLE, CHRISTIANSEN, ROBERTSON — Structural & Civil Engineers

PROJECT: THE WORLD TRADE CENTER

TITLE: NOTCH & NEW SUPPORT FOR EXIST. BEAMS - KEY PLAN EL 310

DATE: 3-15-73

REVISIONS

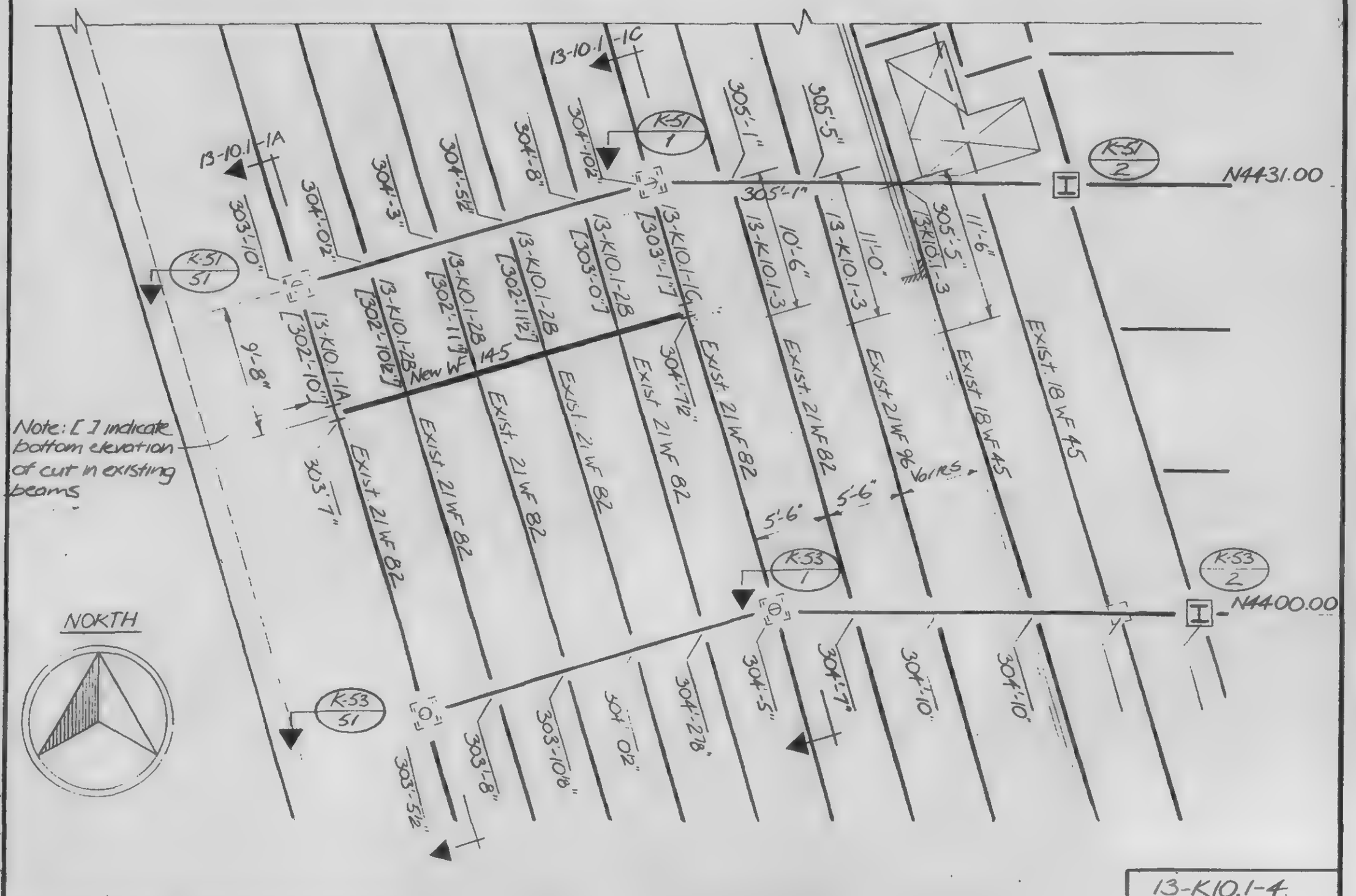

Note: [ ] indicate bottom elevation of cut in existing beams.

LICENSED PROFESSIONAL ENGINEER — LESLIE E. ROBERTSON — No. 34390 — UNIVERSITY OF THE STATE OF NEW YORK

DESIGNED

J Bank

REVIEWED

13-K10.1-4

SKILLING, HELLE, CHRISTIANSEN, ROBERTSON — Structural & Civil Engineers

PROJECT: THE WORLD TRADE CENTER

TITLE: SECTION AT ESCALATOR - EL. 294'-0"

DATE: 3-15-73

REVISIONS

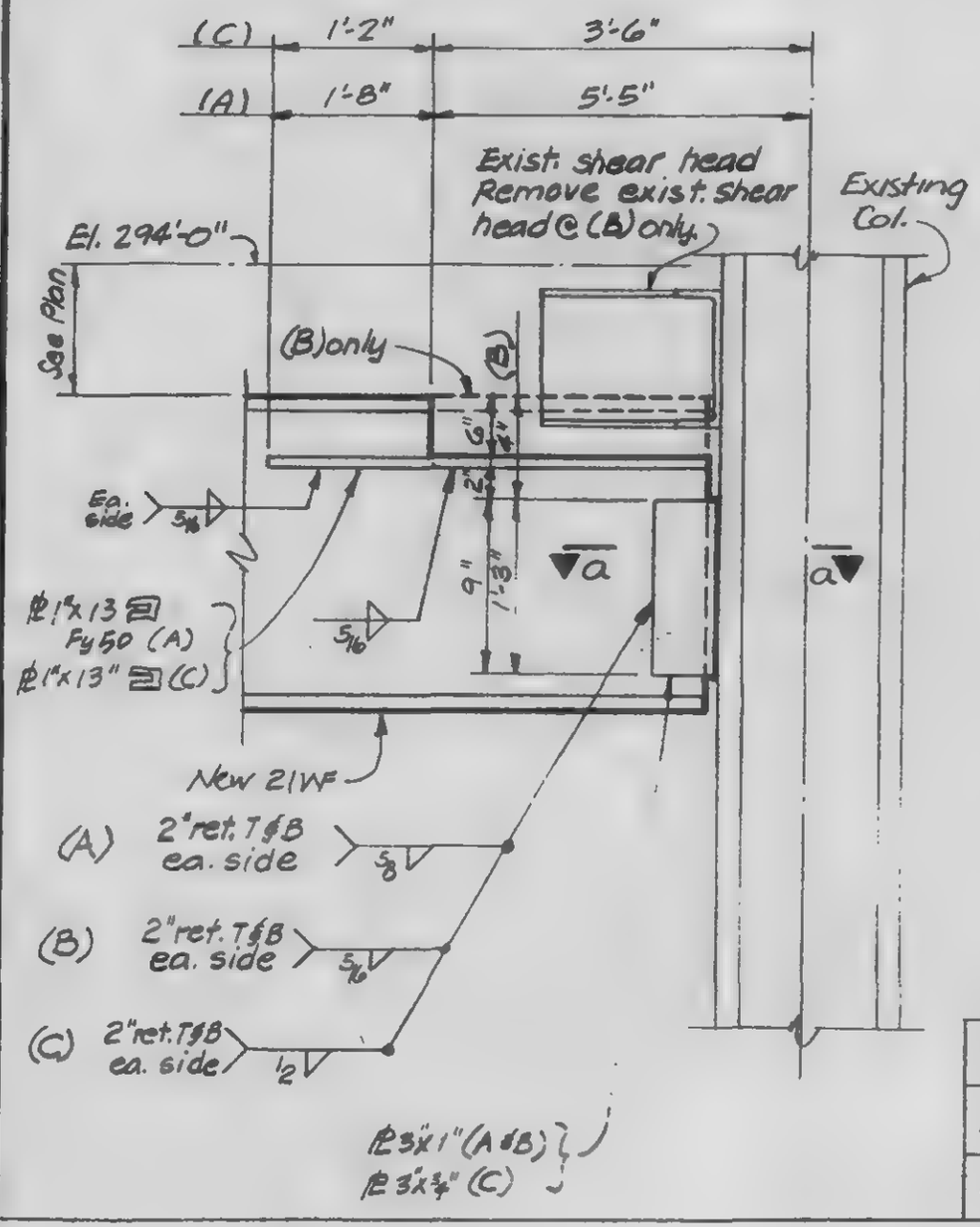

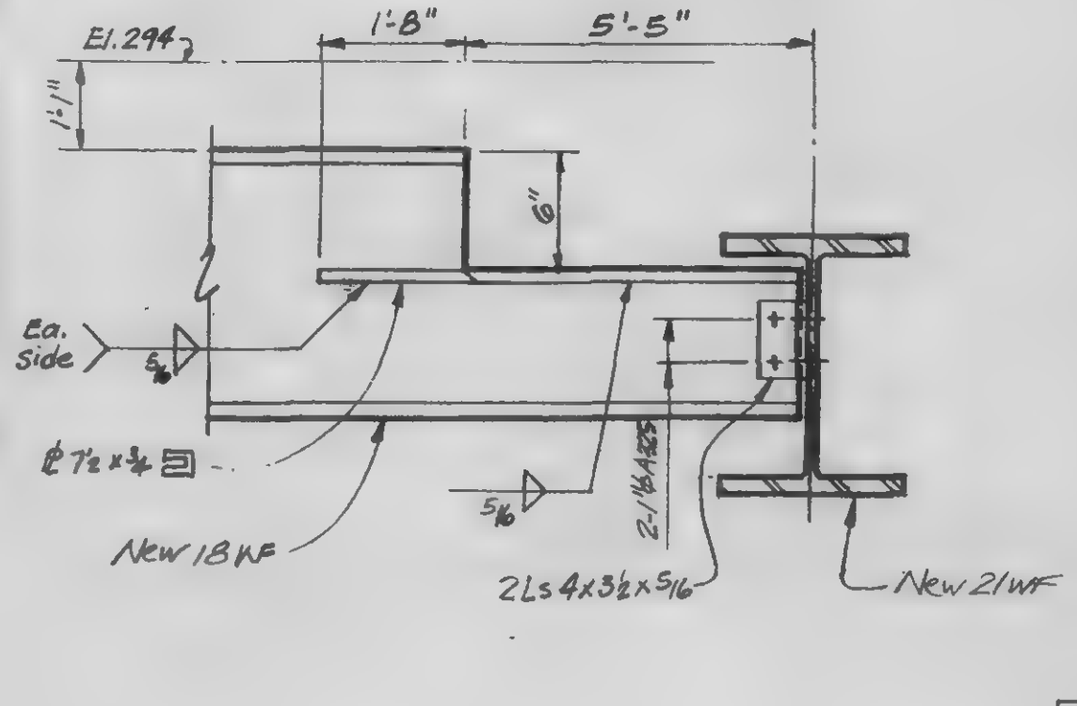

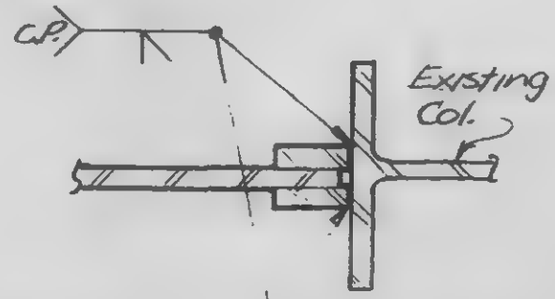

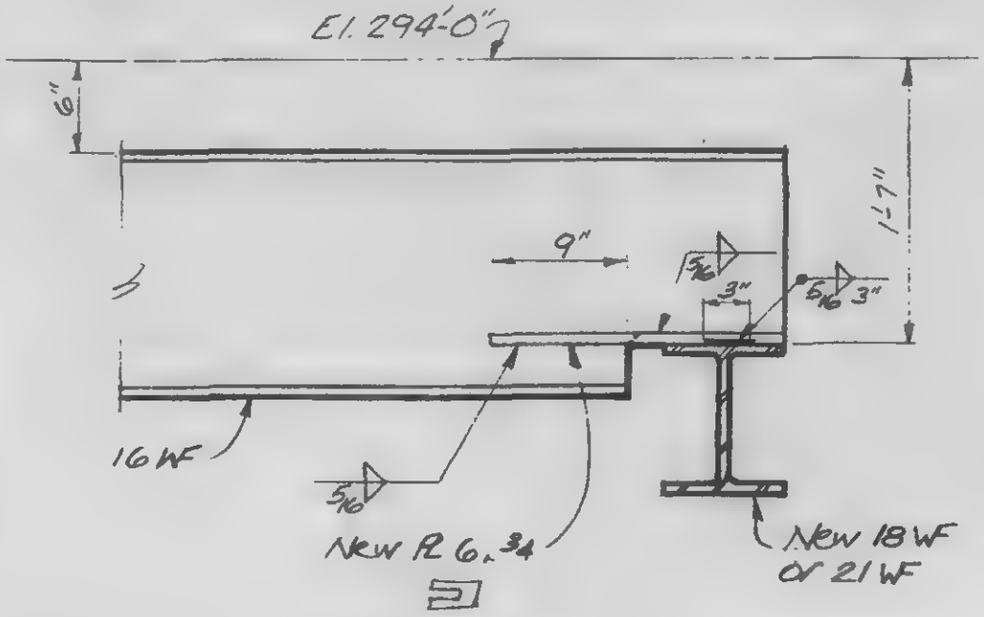

LICENSED PROFESSIONAL ENGINEER — LESLIE E. ROBERTSON — No. 34360 — UNIVERSITY OF THE STATE OF NEW YORK

DESIGNED: KC

DRAWN:

REVIEWED:

A B C D E a

13-K10.2-1

SKILLING, HELLE, CHRISTIANSEN, ROBERTSON — Structural & Civil Engineers

PROJECT: THE WORLD TRADE CENTER | TITLE: SECTION AT ESCALATOR - EL. 294'-0" | DATE: 3-15-73

REVISIONS

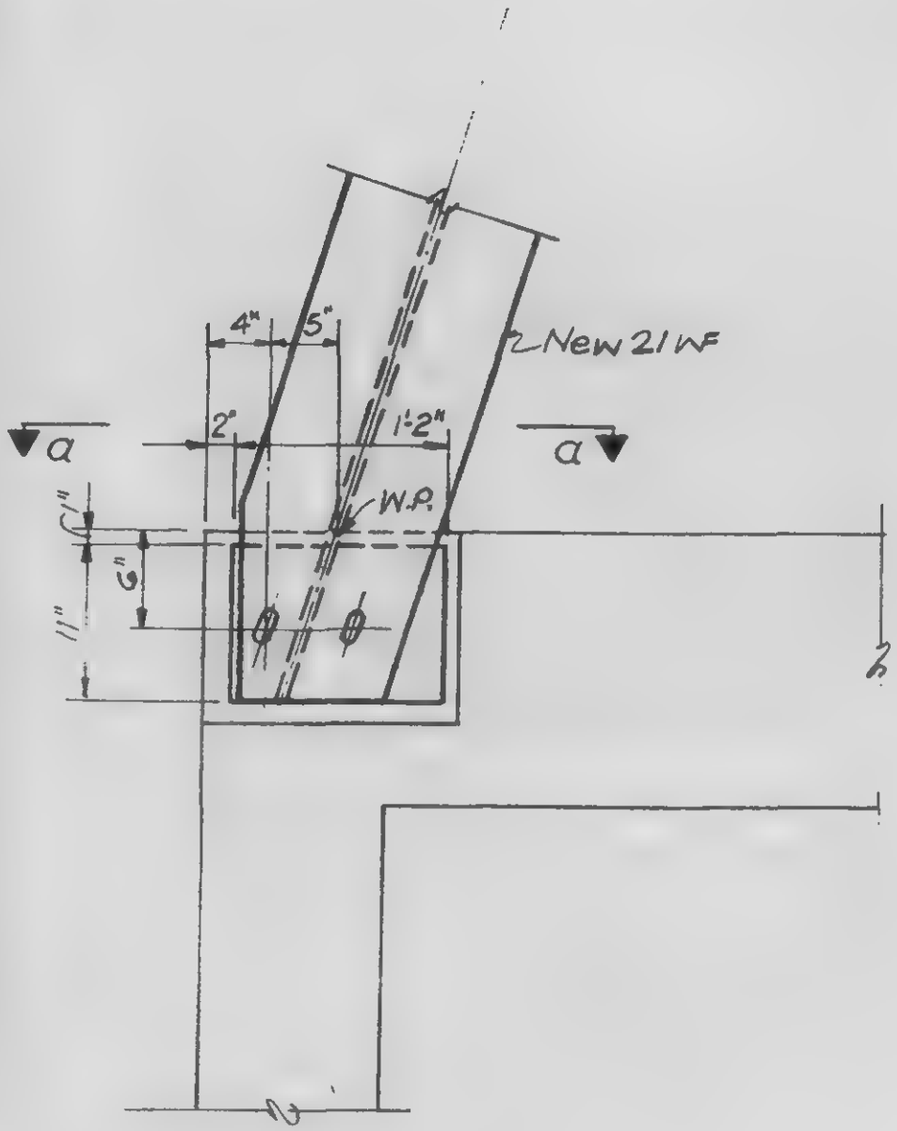

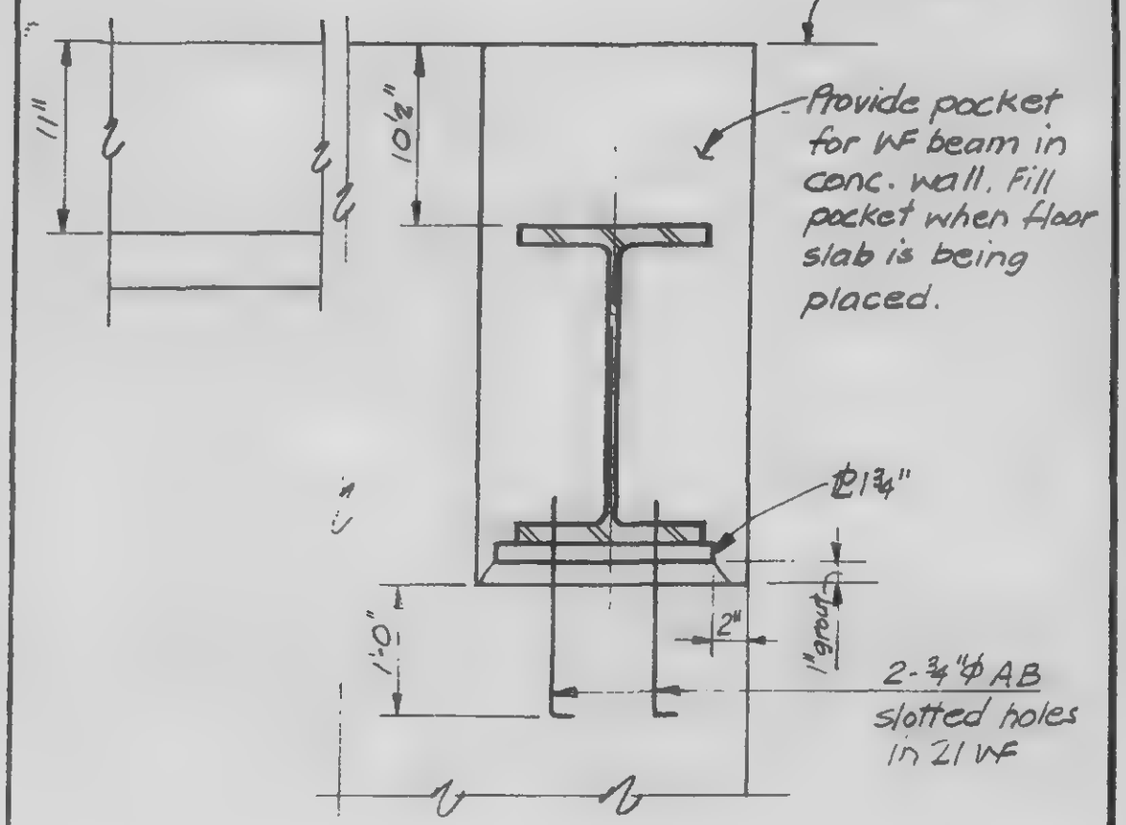

LICENSED PROFESSIONAL ENGINEER — LESLIE E. ROBERTSON — No. 34360 — UNIVERSITY OF THE STATE OF NEW YORK

DESIGNED: KC

DRAWN:

REVIEWED:

a

13-K10.2-2

SKILLING, HELLE, CHRISTIANSEN, ROBERTSON — Structural & Civil Engineers

PROJECT: THE WORLD TRADE CENTER | TITLE: DETAIL AT COL. H5/2 - EL. 284 | DATE: 3-15-73

REVISIONS

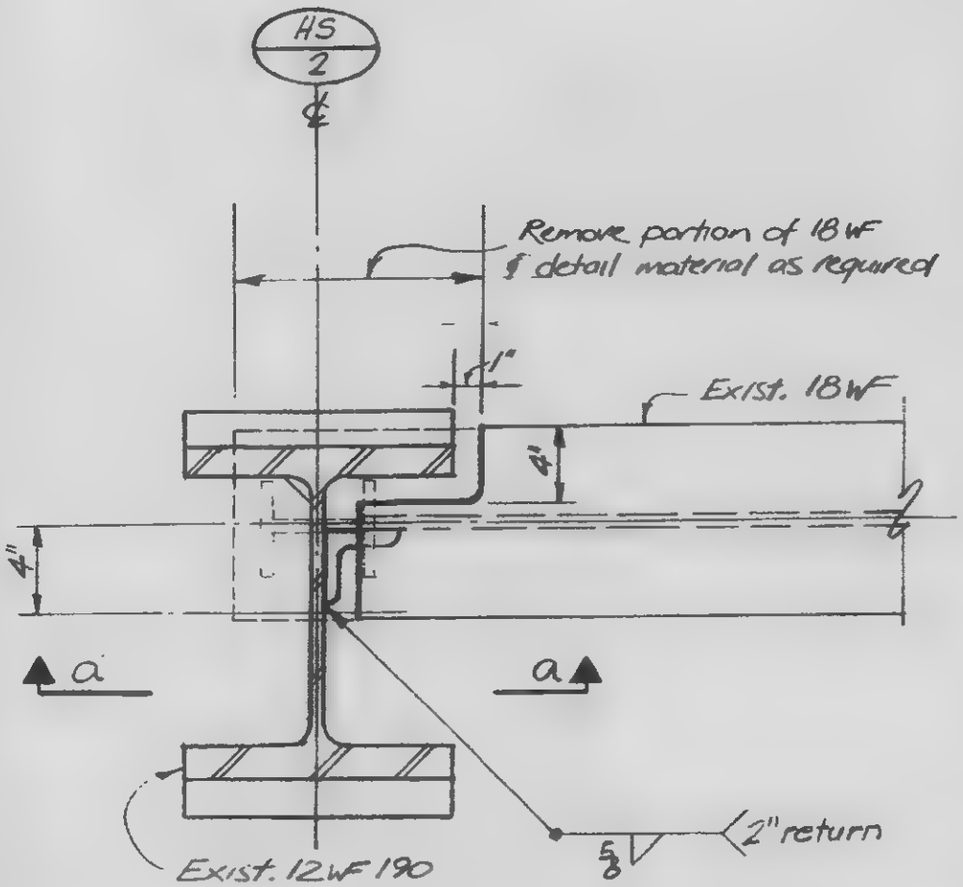

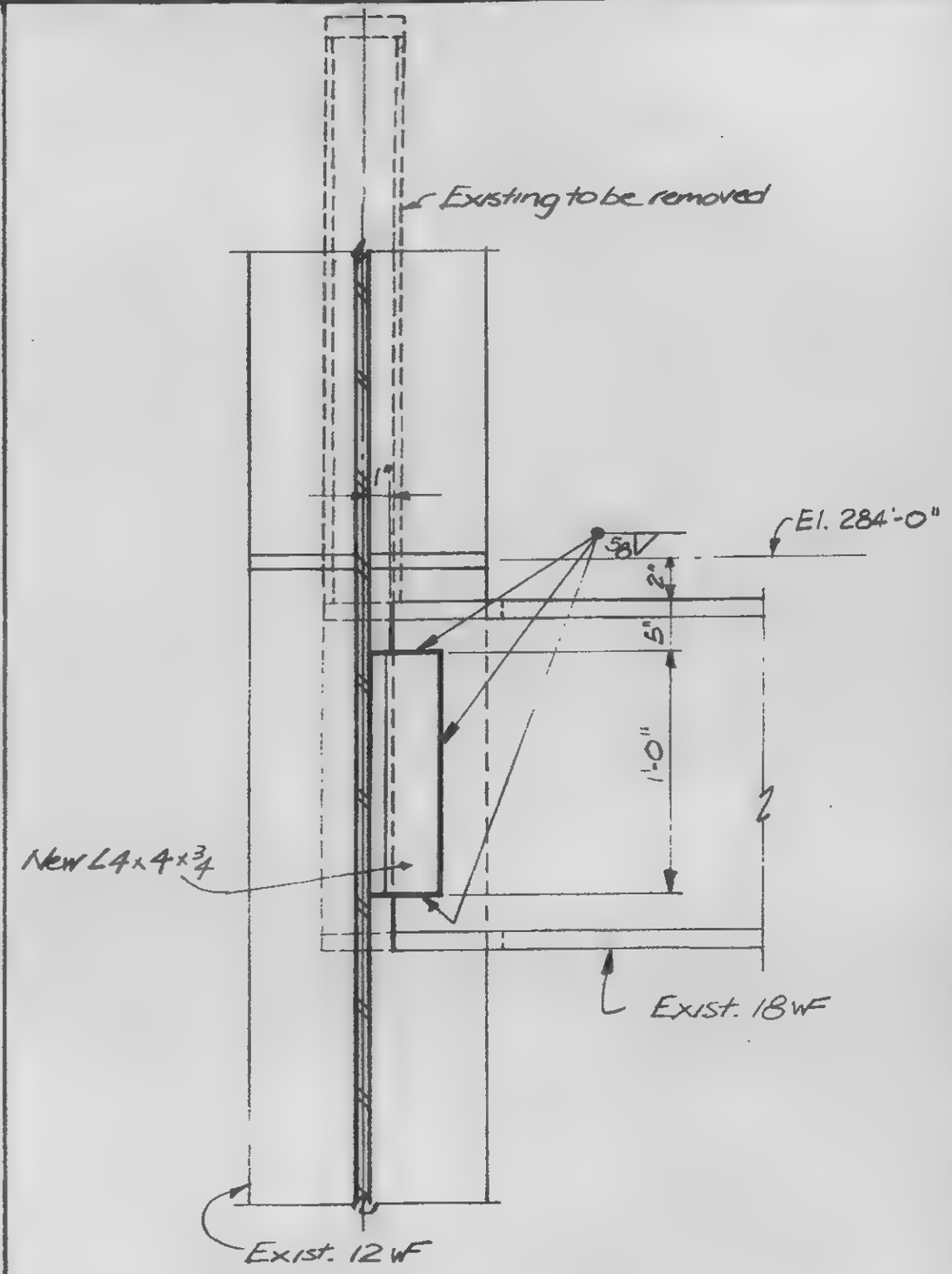

LICENSED PROFESSIONAL ENGINEER
LESLIE E. ROBERTSON
No 34360
UNIVERSITY OF THE STATE OF NEW YORK

DESIGNED: K.C.
DRAWN:
REVIEWED:

A | a

13-K10.3-4

SKILLING, HELLE, CHRISTIANSEN, ROBERTSON — Structural & Civil Engineers

PROJECT: THE WORLD TRADE CENTER

TITLE: EL. 310, ZONE K3 - ESC. H1 & H2 - CONN. DETAILS

DATE: 5-7-73.

REVISIONS

A

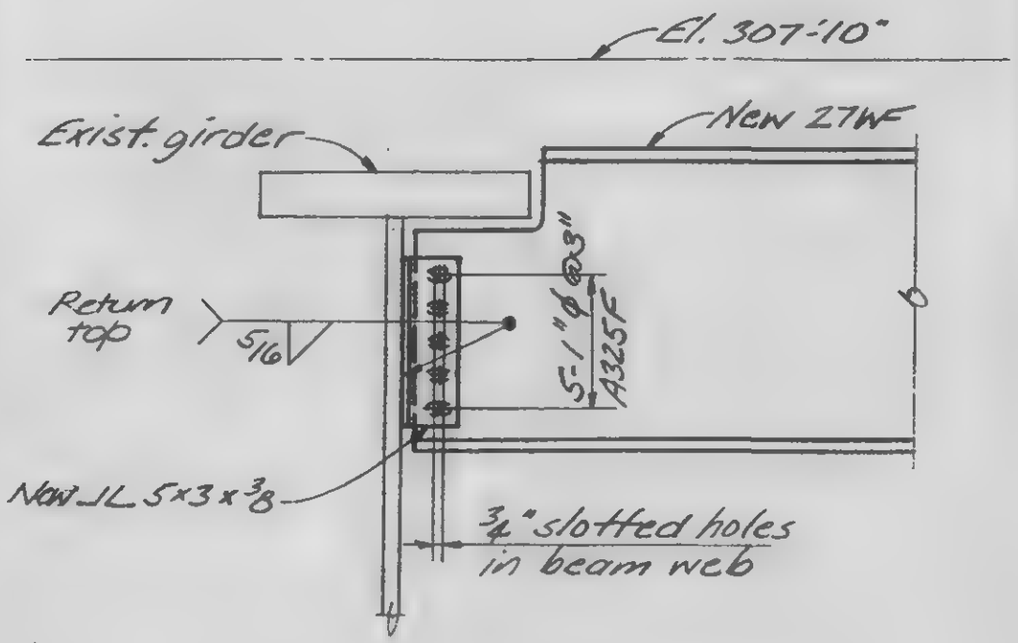

B

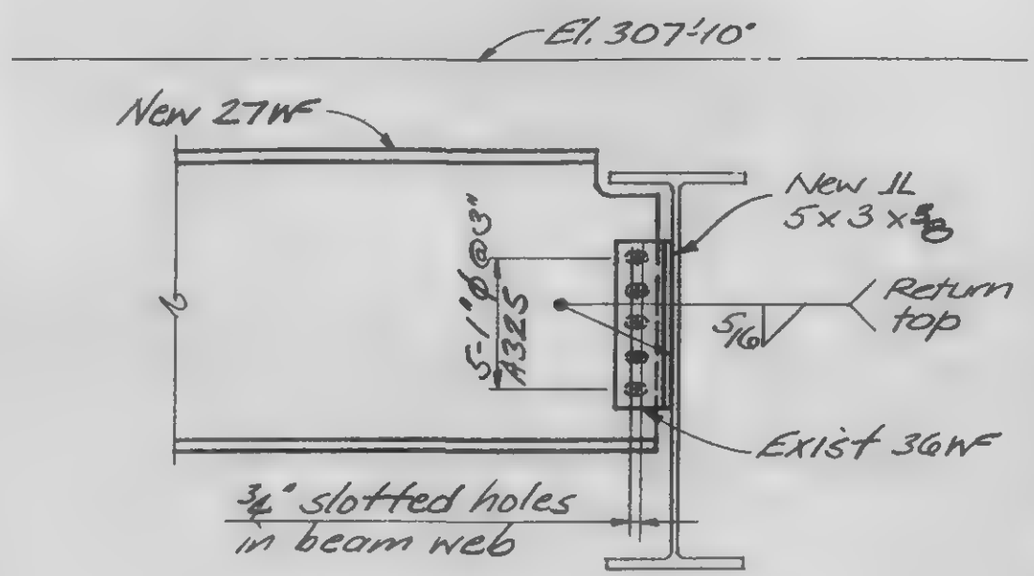

C

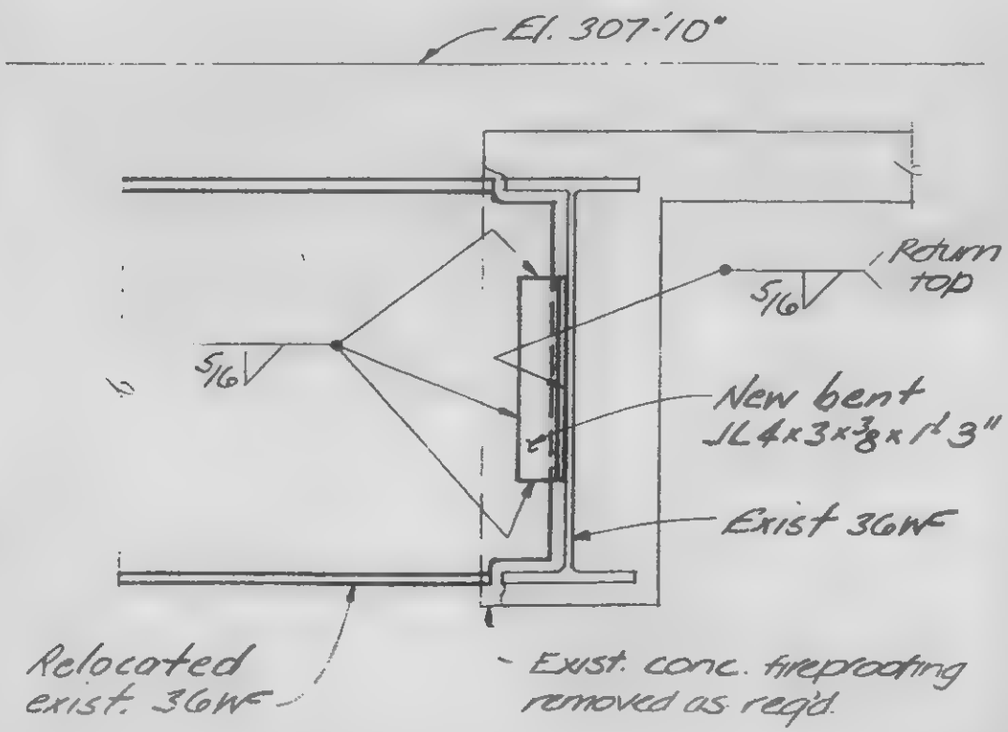

LICENSED PROFESSIONAL ENGINEER
LESLIE E. ROBERTSON
No 34960
UNIVERSITY OF THE STATE OF NEW YORK

DESIGNED: KC

DRAWN: JG, JB

REVIEWED: WAB

13-K-11.1-1

SKILLING, HELLE, CHRISTIANSEN, ROBERTSON — Structural & Civil Engineers

PROJECT: THE WORLD TRADE CENTER | TITLE: EL. 310 - ZONE K3 - STAIR K3 - CONN. DETAILS | DATE: 5-7-73

REVISIONS:

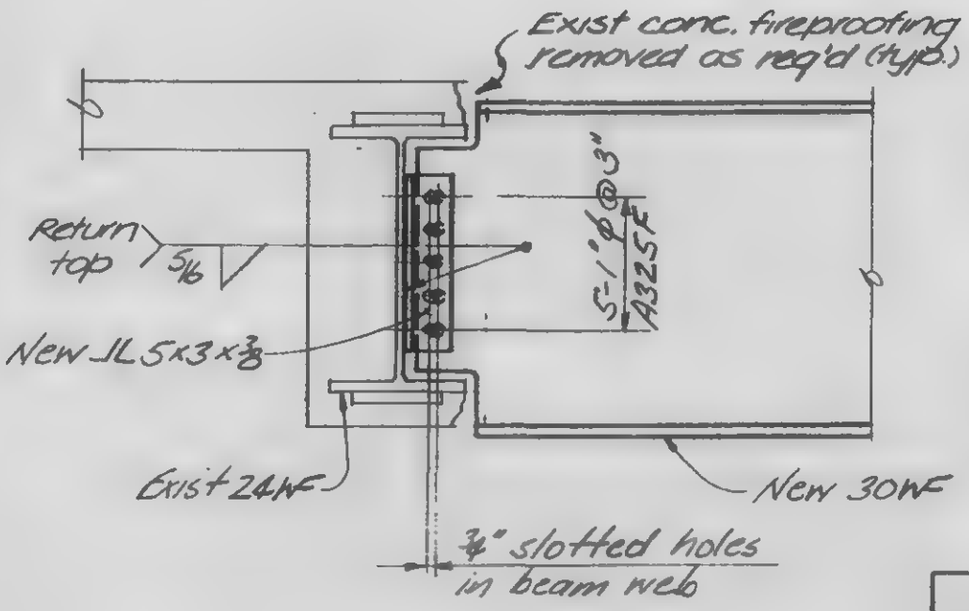

A

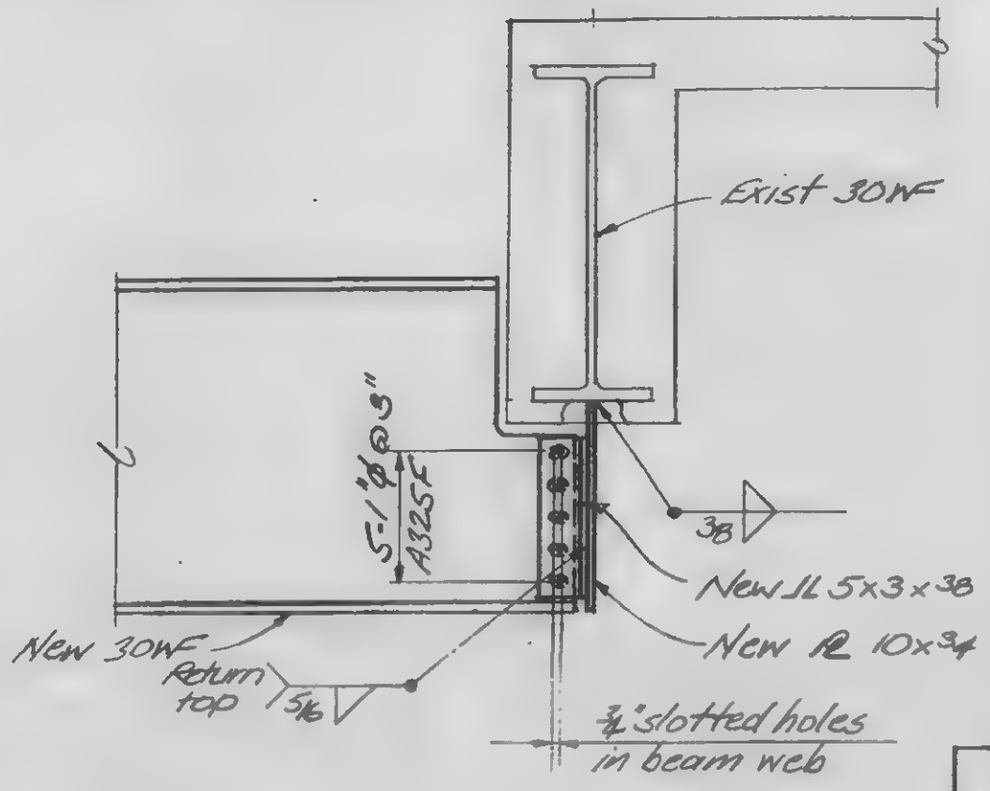

B

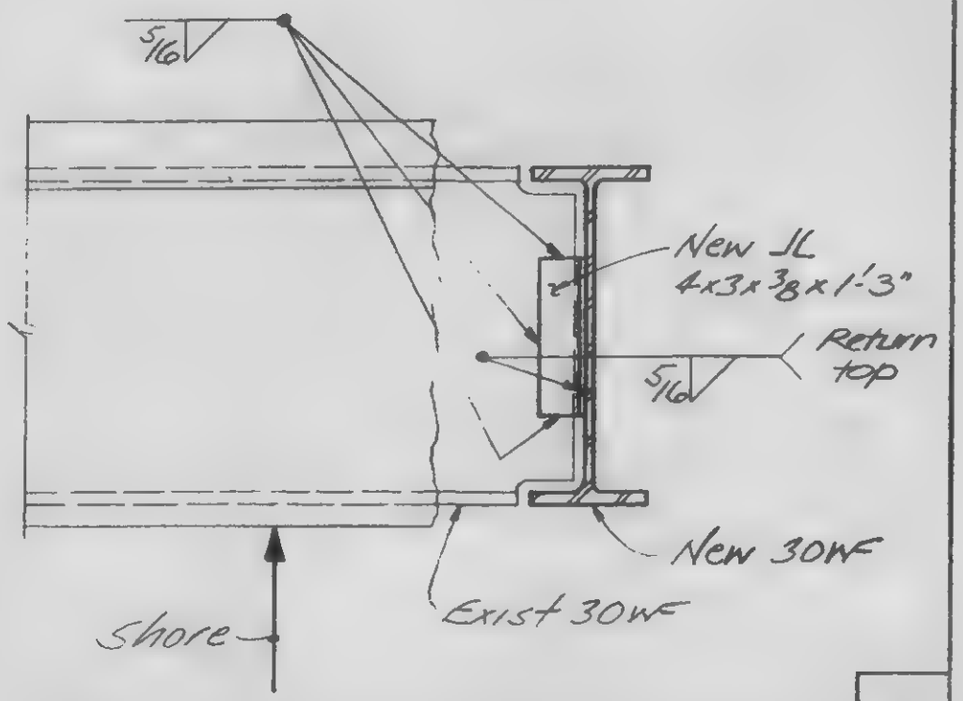

C

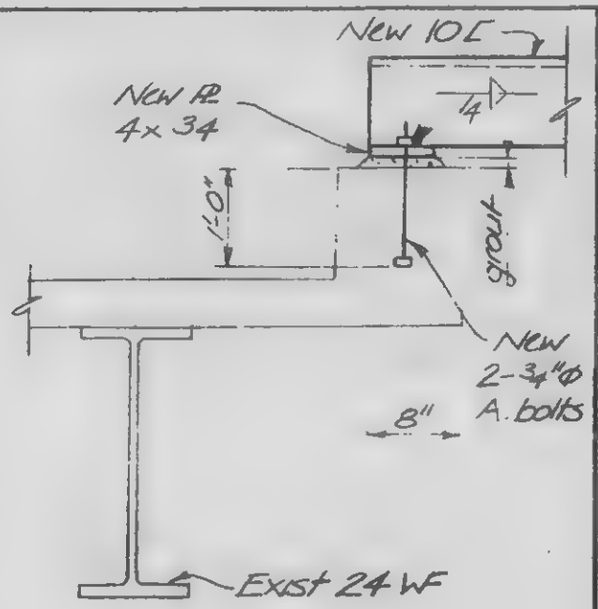

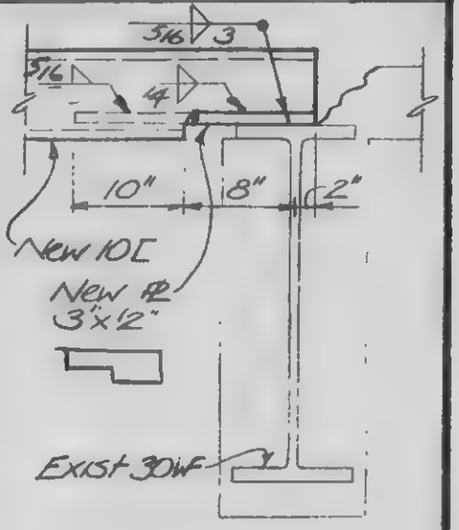

D E

13-K11.1-2

LICENSED PROFESSIONAL ENGINEER — LESLIE E. ROBERTSON — No. 34360 — UNIVERSITY OF THE STATE OF NEW YORK

DESIGNED KC

DRAWN JB

REVIEWED LEB

SKILLING, HELLE, CHRISTIANSEN, ROBERTSON — Structural & Civil Engineers

PROJECT: THE WORLD TRADE CENTER | TITLE: EL. 310 - ZONE K3 - "H" ELEV. - CONN DETAILS | DATE: 5-7-73

REVISIONS

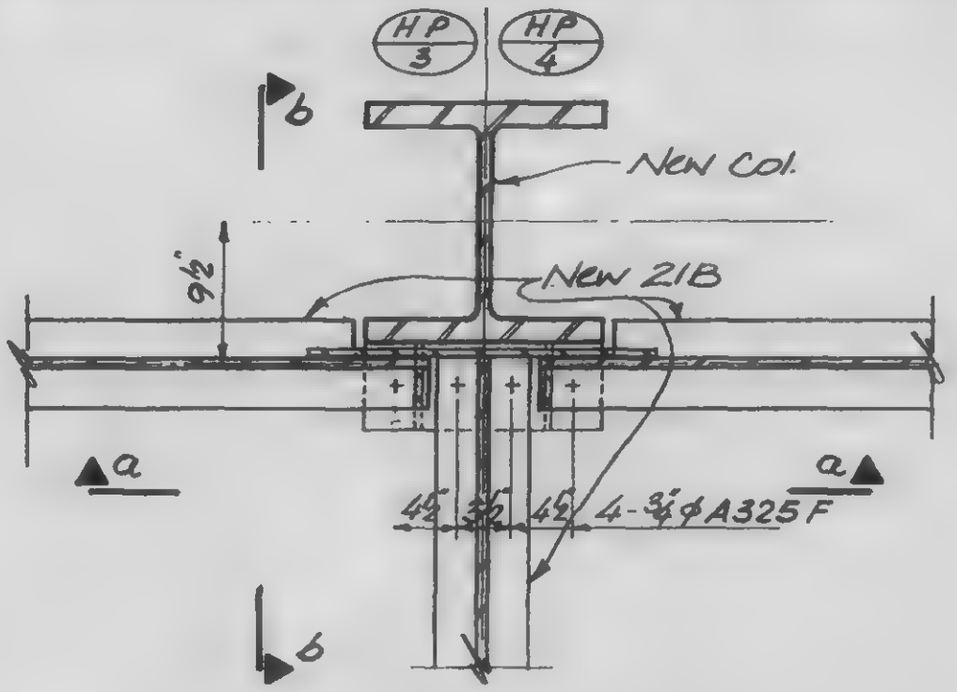

A

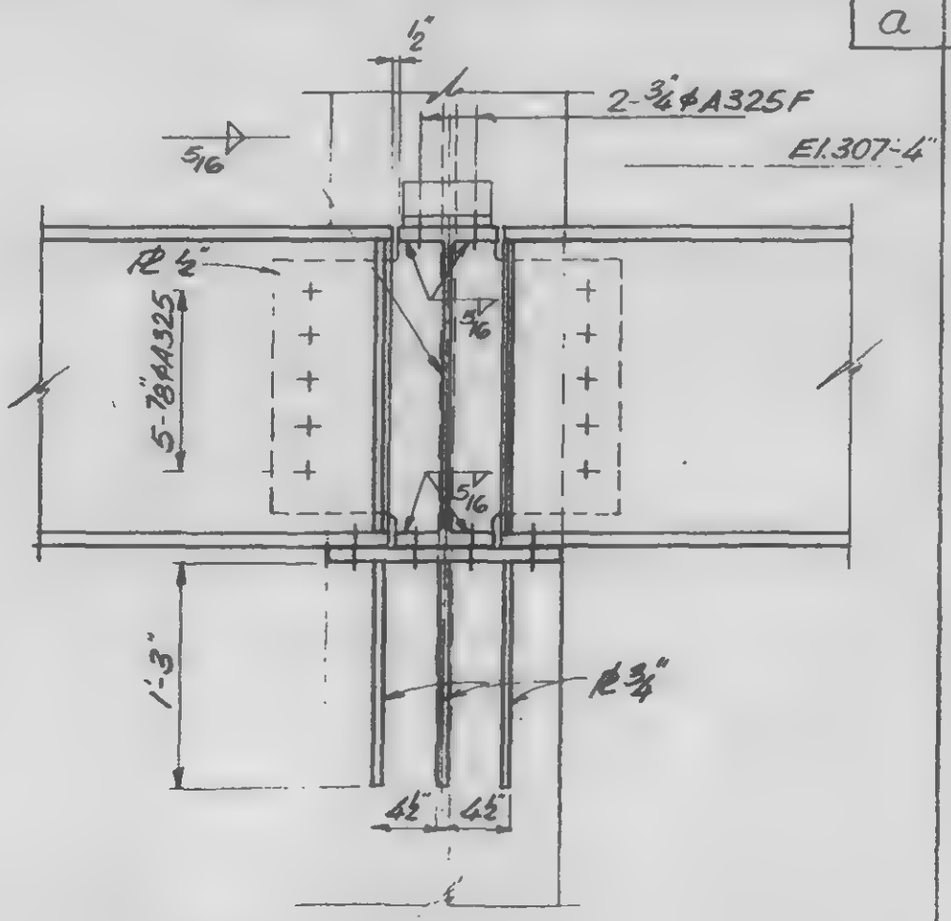

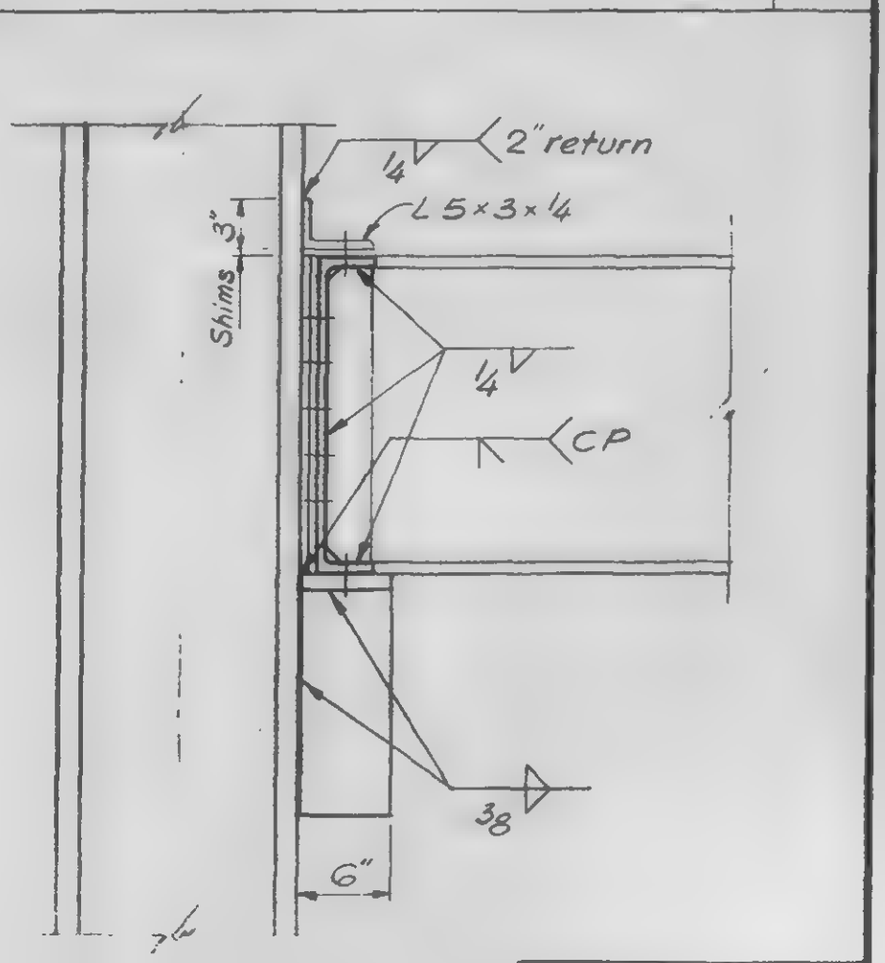

LICENSED PROFESSIONAL ENGINEER
LESLIE E. ROBERTSON
No 34360
UNIVERSITY OF THE STATE OF NEW YORK

DESIGNED: K. Chiang
DRAWN: John Gnaus
REVIEWED: [illegible]

13-K11 1-31

SKILLING, HELLE, CHRISTIANSEN, ROBERTSON — Structural & Civil Engineers

PROJECT: THE WORLD TRADE CENTER

TITLE: EL 310-ZONE K3-"H" ELEV.-CONN DETAILS

DATE: 5-7-73

REVISIONS

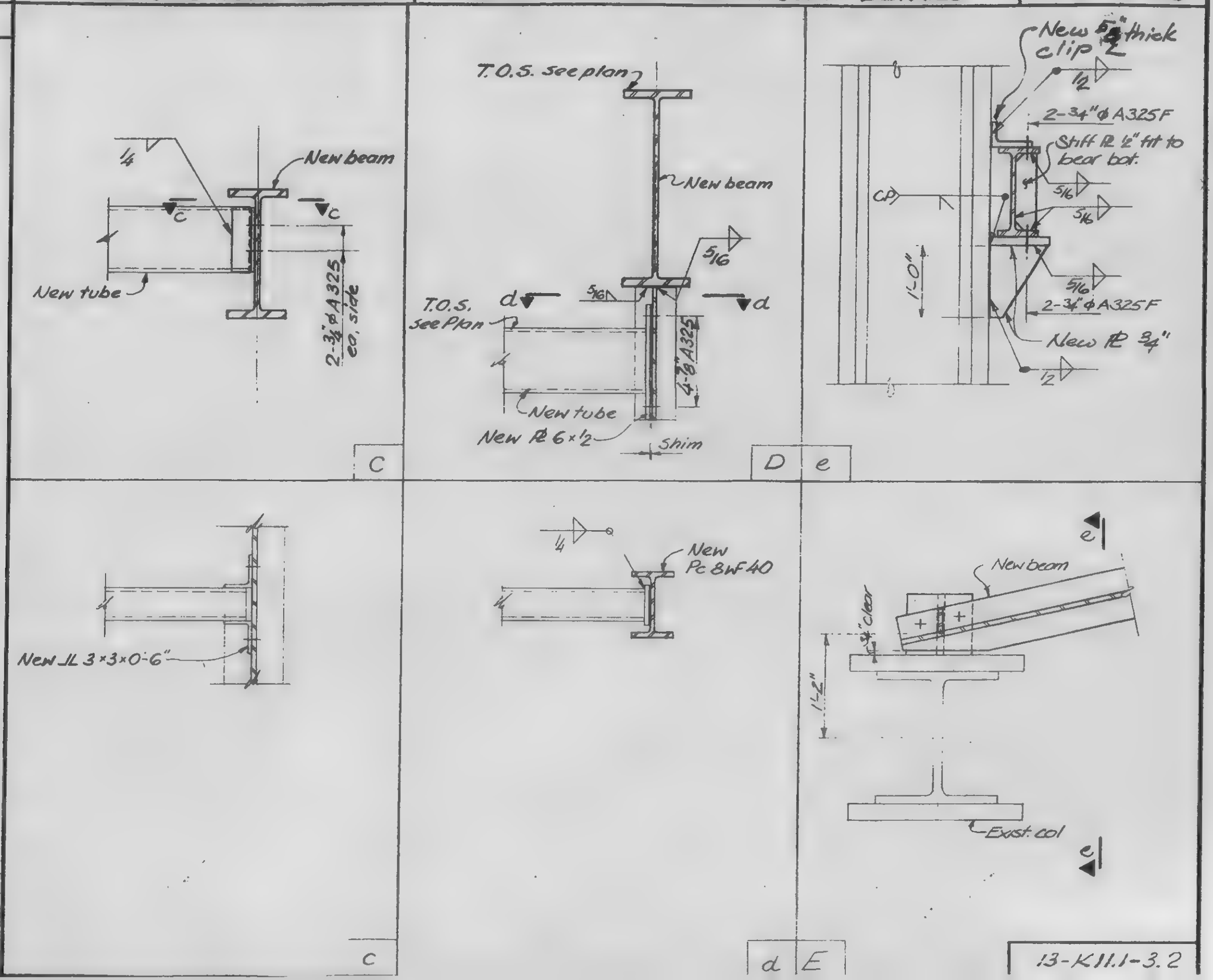

LICENSED PROFESSIONAL ENGINEER
LESLIE E. ROBERTSON
No. 34360
UNIVERSITY OF THE STATE OF NEW YORK

DESIGNED: K. Chiang

DRAWN: John Guerrero

REVIEWED: WCE

13-K11.1-3.2

SKILLING, HELLE, CHRISTIANSEN, ROBERTSON — Structural & Civil Engineers

PROJECT: THE WORLD TRADE CENTER | TITLE: EL. 310 -ZONE K3-"H" ELEV.-CONN DETAILS | DATE: 5-7-73.

REVISIONS

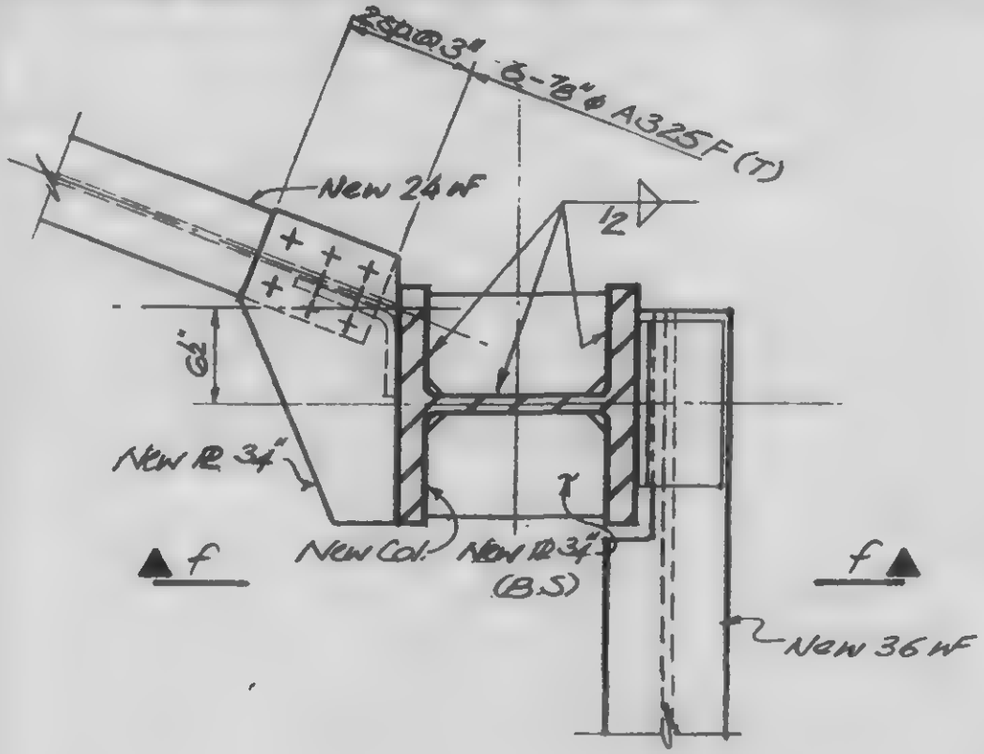

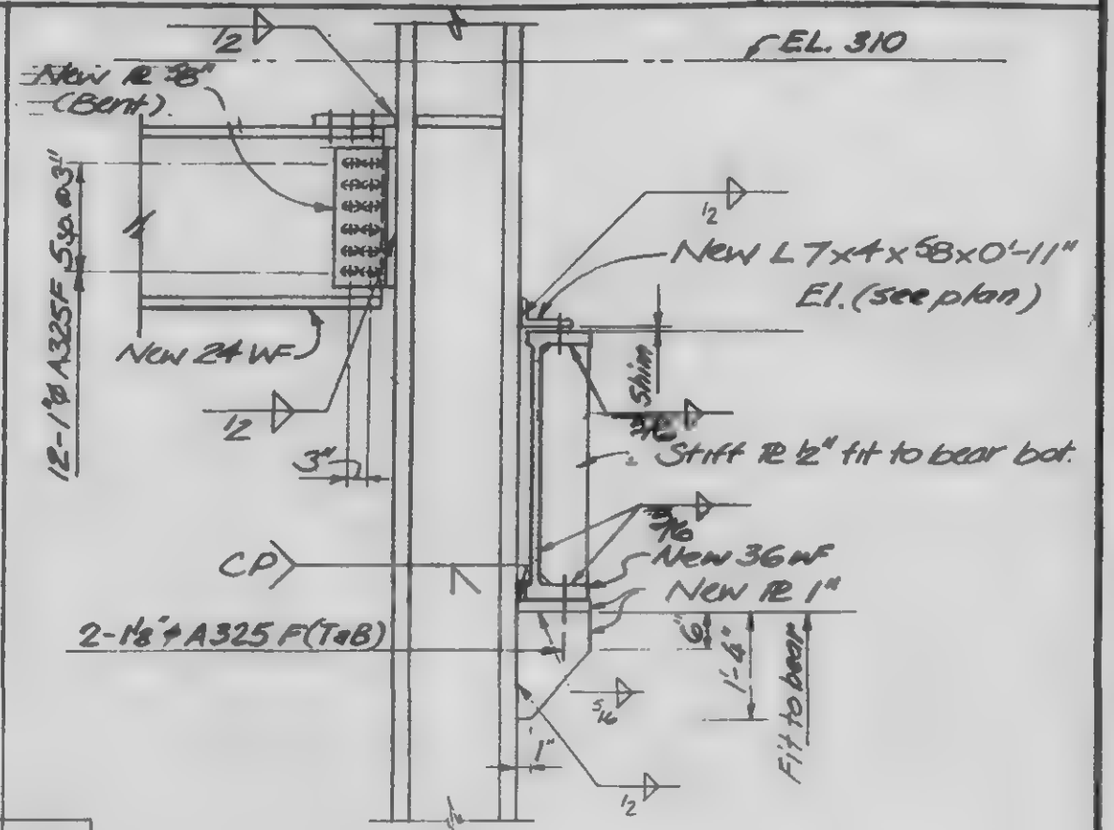

F f

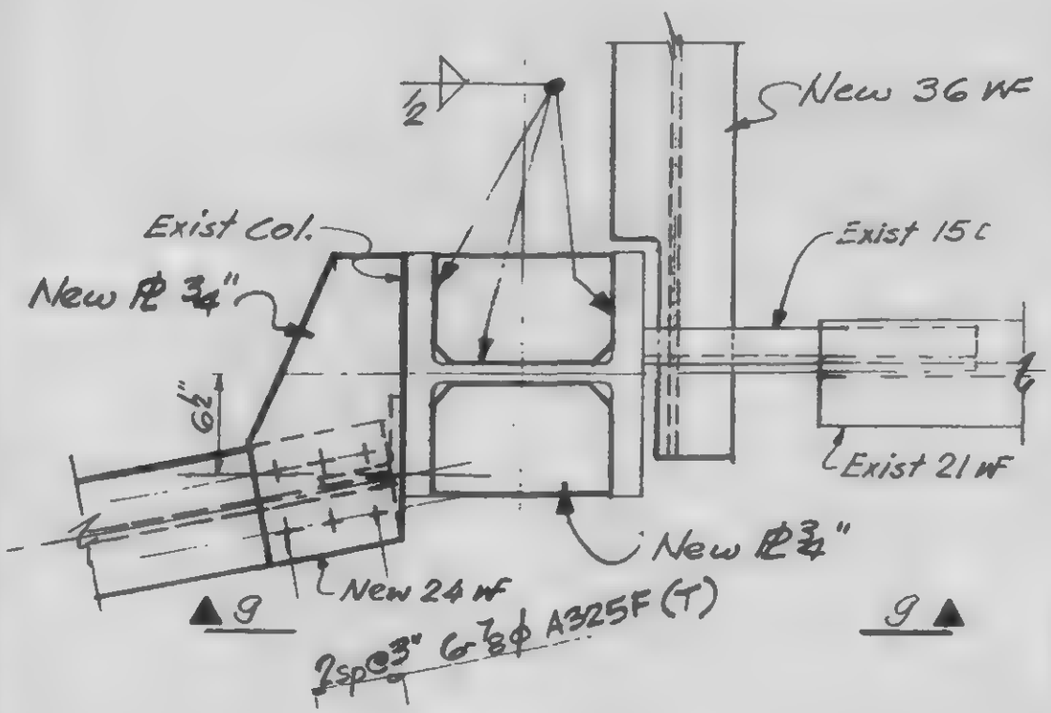

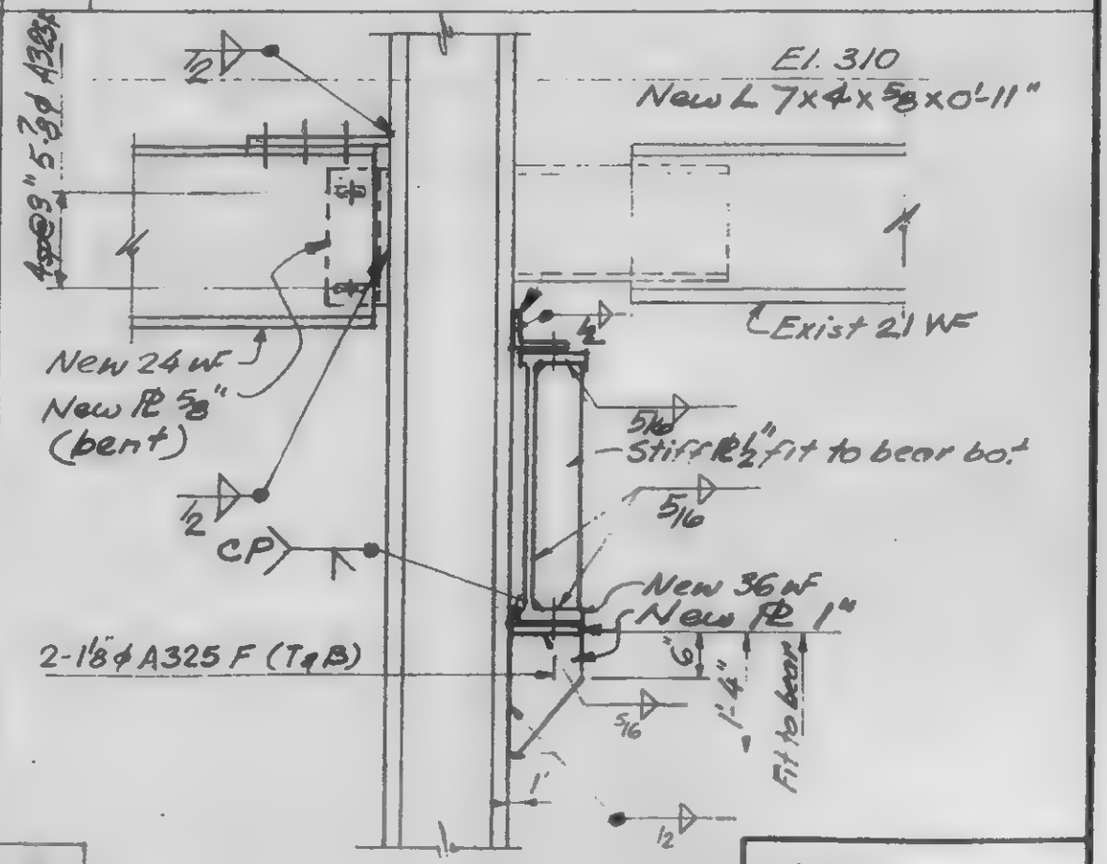

G g

LICENSED PROFESSIONAL ENGINEER — LESLIE E. ROBERTSON — No 34360 — UNIVERSITY OF THE STATE OF NEW YORK

DESIGNED K.C.
DRAWN
REVIEWED WOB

12-VIII-22

SKILLING, HELLE, CHRISTIANSEN, ROBERTSON — Structural & Civil Engineers

PROJECT: THE WORLD TRADE CENTER

TITLE: EL. 310 - ZONE K3 - "H" ELEV. - CONN. DETAILS

DATE: 5-7-73

REVISIONS

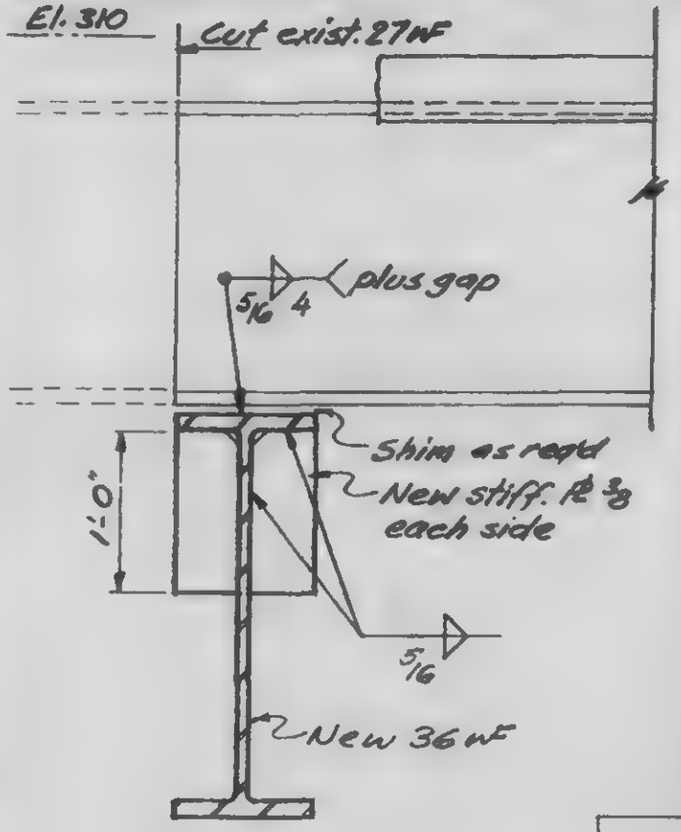

H

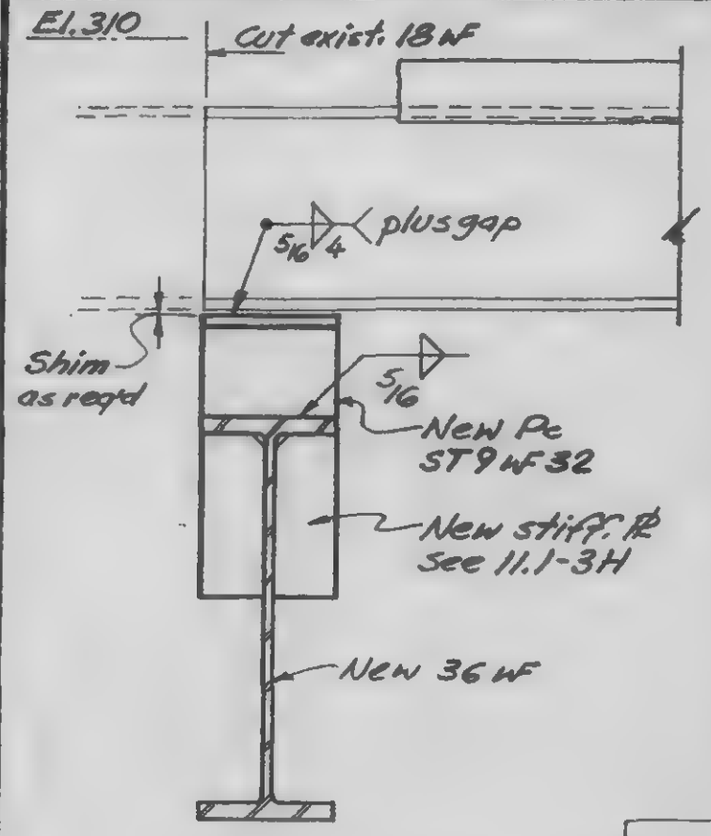

J

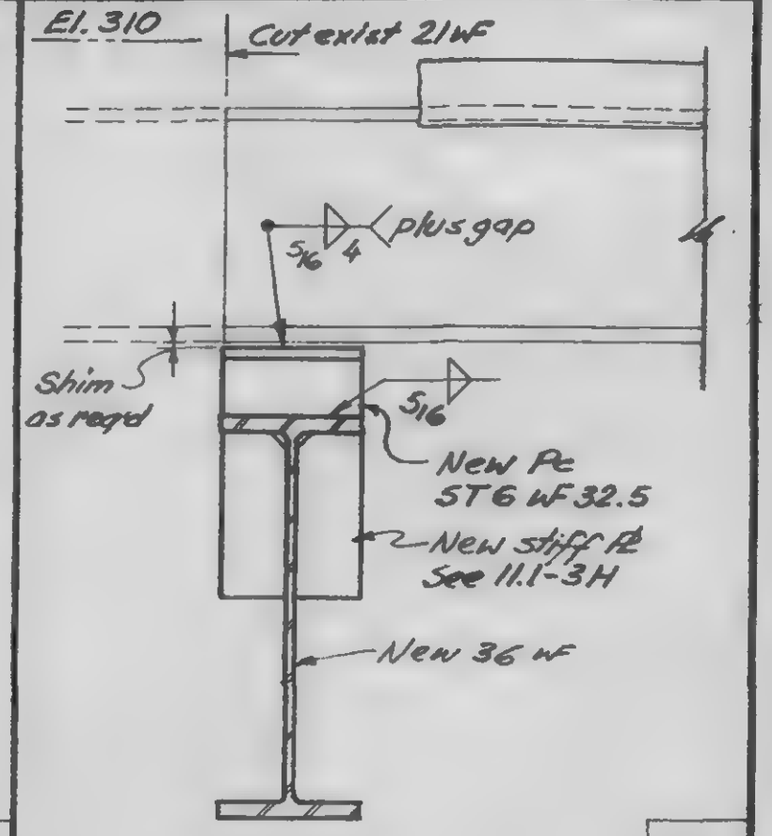

K

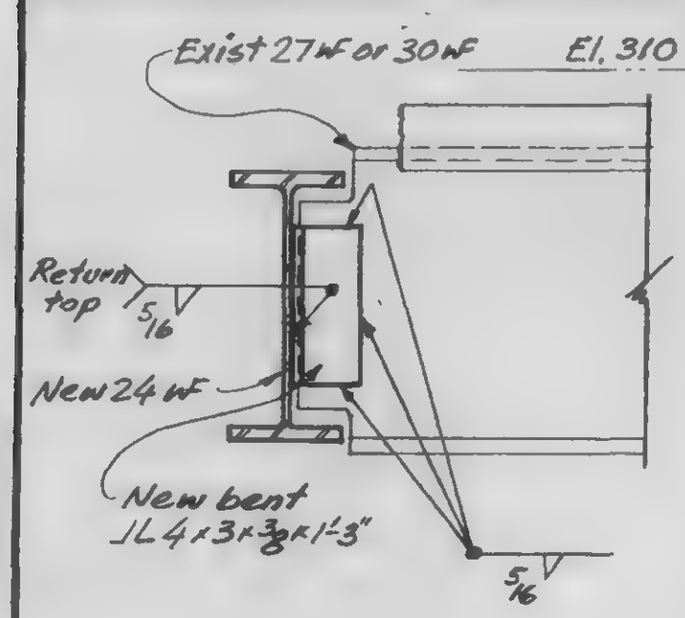

M

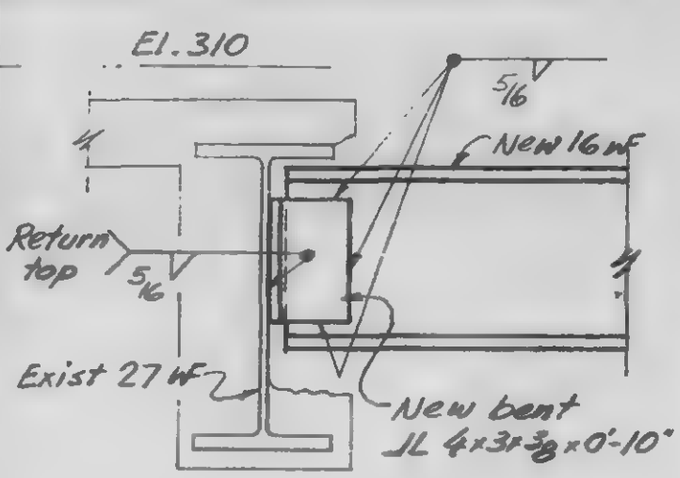

N P

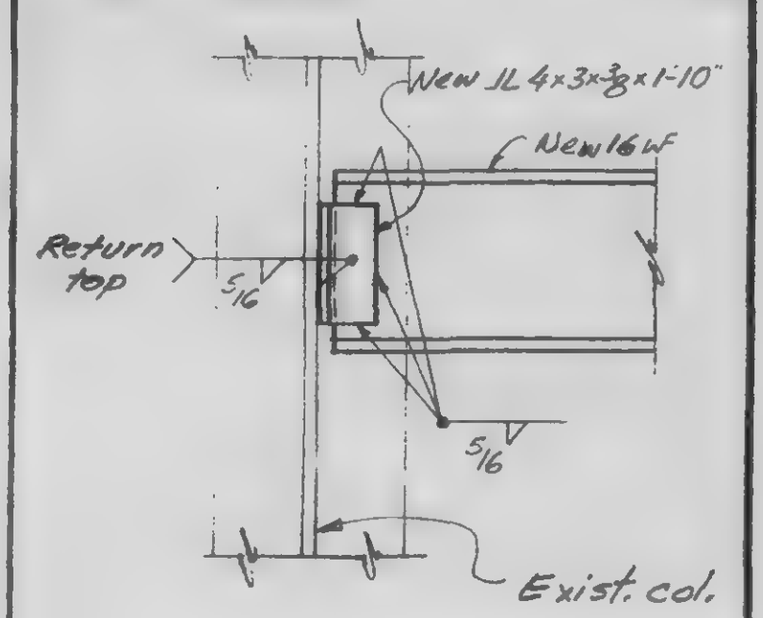

LICENSED PROFESSIONAL ENGINEER
LESLIE E. ROBERTSON
No 34360
UNIVERSITY OF THE STATE OF NEW YORK

DESIGNED

DRAWN

REVIEWED WAB

13-K11.1-3.4

SKILLING, HELLE, CHRISTIANSEN, ROBERTSON — Structural & Civil Engineers

PROJECT: THE WORLD TRADE CENTER | TITLE: EL. 310 - ZONE K3 - COLUMN REMOVAL DETAILS | DATE: 5-7-73

REVISIONS

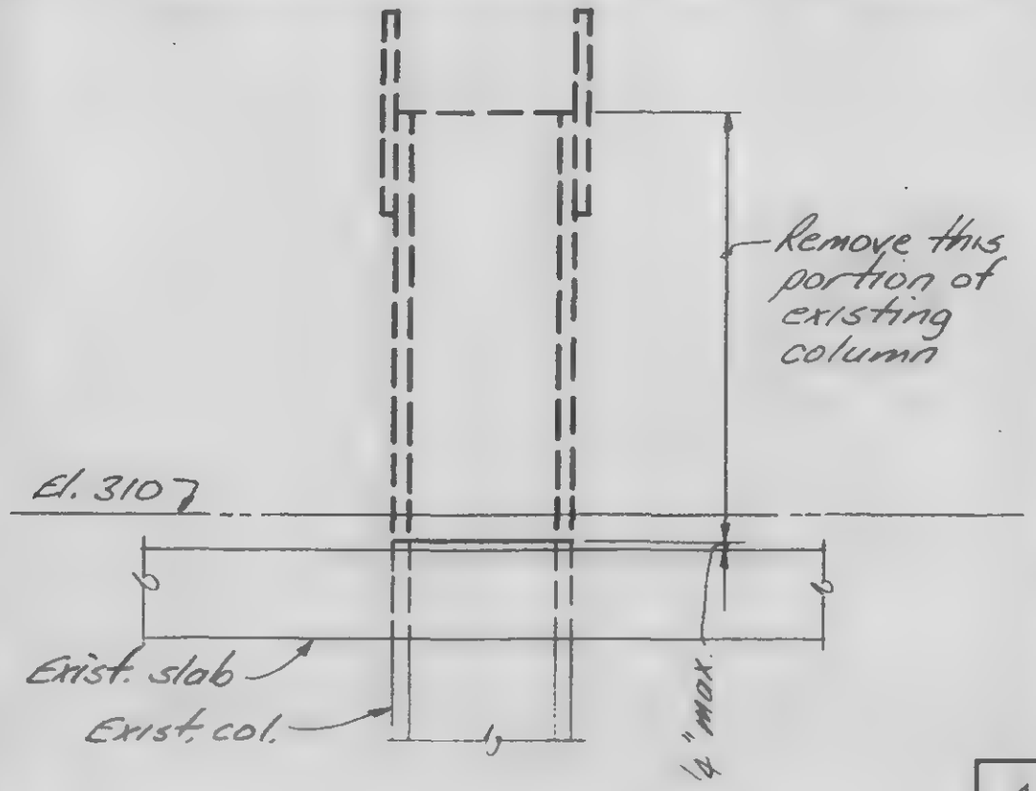

A

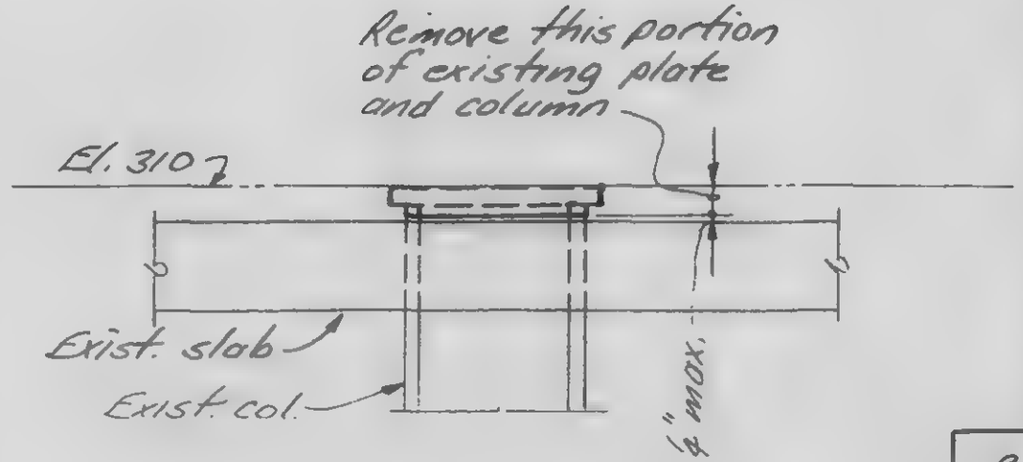

B

LICENSED PROFESSIONAL ENGINEER
LESLIE E. ROBERTSON
No. 24260
UNIVERSITY OF THE STATE OF NEW YORK

DESIGNED

DRAWN JA

REVIEWED Wob

13-K11.1-4

SKILLING, HELLE, CHRISTIANSEN, ROBERTSON — Structural & Civil Engineers

PROJECT: THE WORLD TRADE CENTER

TITLE: EL 310 - ZONE K1 - NEW OPENINGS - CONN. DETAILS

DATE: 5-7-73

REVISIONS

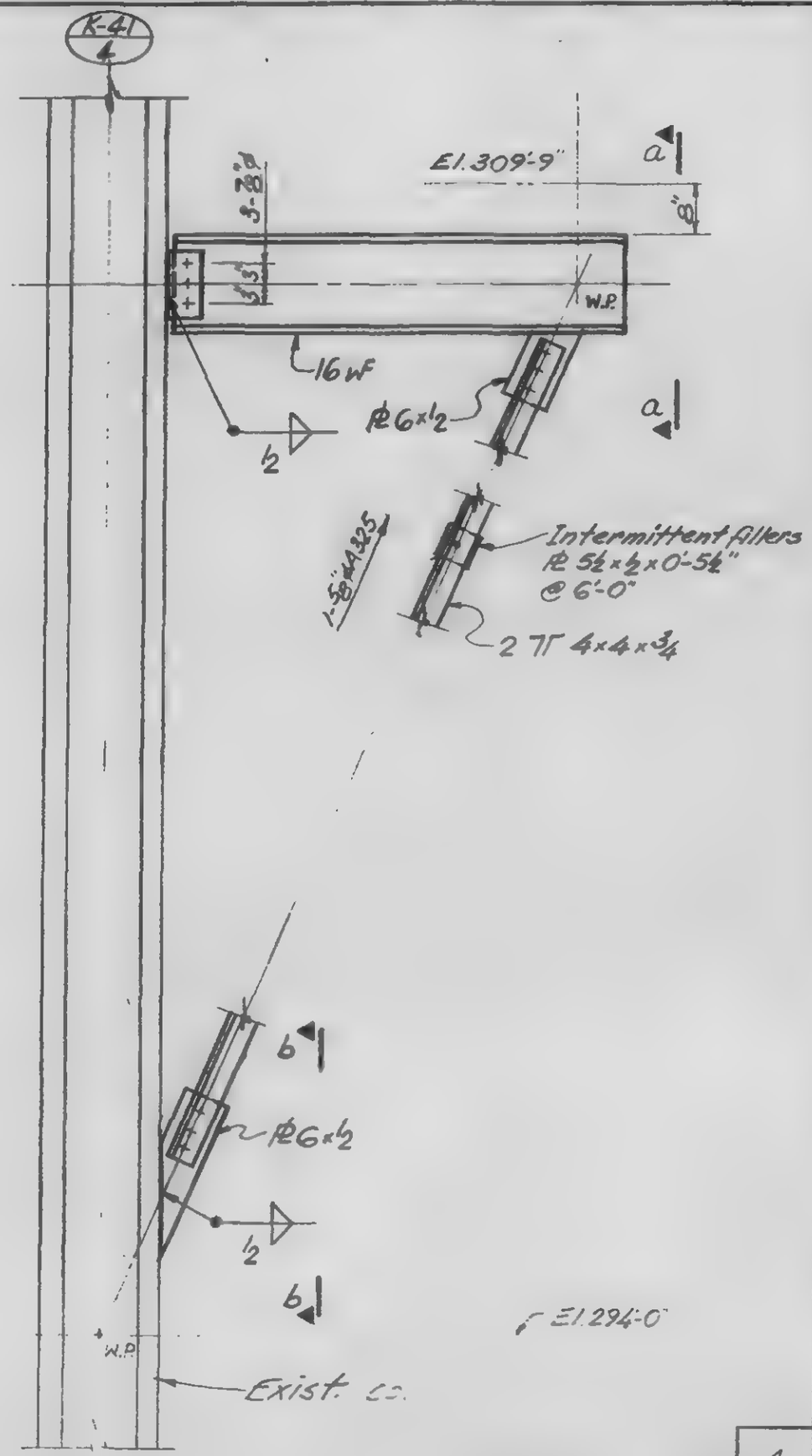

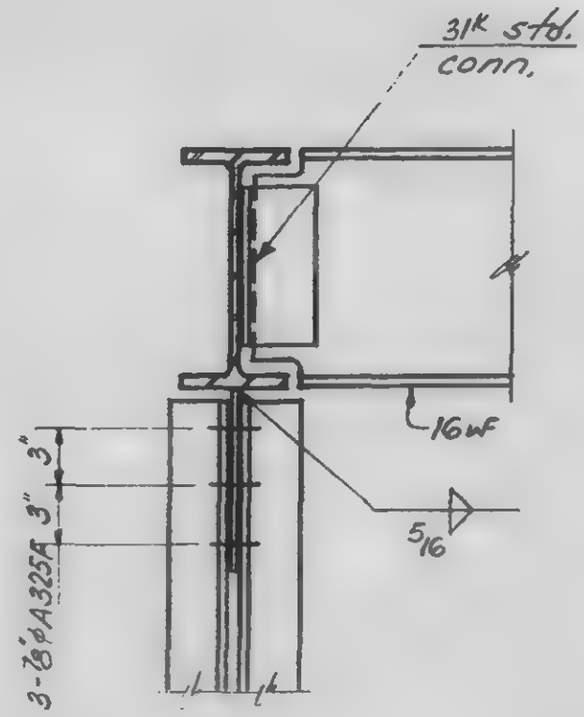

a

b

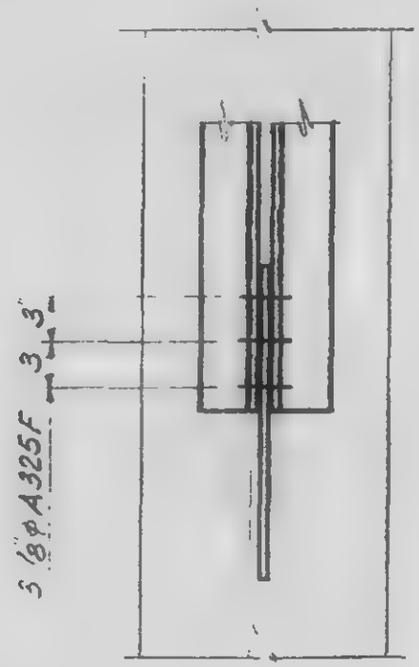

LICENSED PROFESSIONAL ENGINEER
LESLIE E. ROBERTSON
No. 34360
UNIVERSITY OF THE STATE OF NEW YORK

DESIGNED

DRAWN

REVIEWED

A

13-K11.1-5.1.

SKILLING, HELLE, CHRISTIANSEN, ROBERTSON — Structural & Civil Engineers

PROJECT: THE WORLD TRADE CENTER | TITLE: EL. 310 - ZONE K1 - NEW OPENINGS CONN. DETAILS | DATE: 5-7-73

REVISIONS

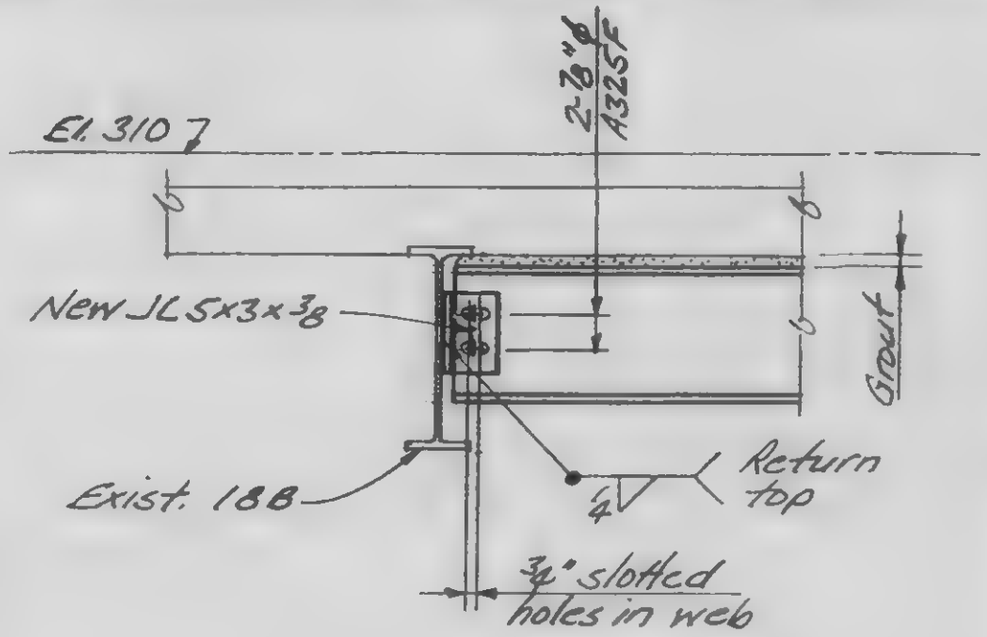

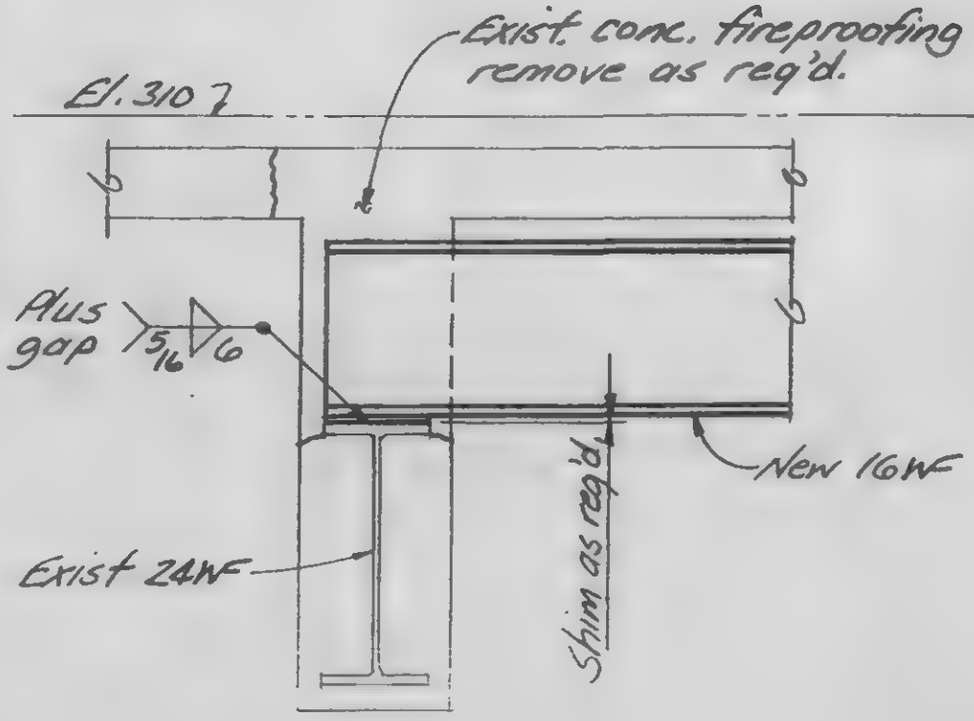

C

D

LICENSED PROFESSIONAL ENGINEER
LESLIE E. ROBERTSON
No 24980
UNIVERSITY OF THE STATE OF NEW YORK

DESIGNED

DRAWN JA

REVIEWED WaB

13-K11.1-5.2

SKILLING, HELLE, CHRISTIANSEN, ROBERTSON — Structural & Civil Engineers

PROJECT: THE WORLD TRADE CENTER

TITLE: EL. 310-ZONE K5-STAIR KGA - CONN. DETAIL

DATE: 5-7-73

REVISIONS

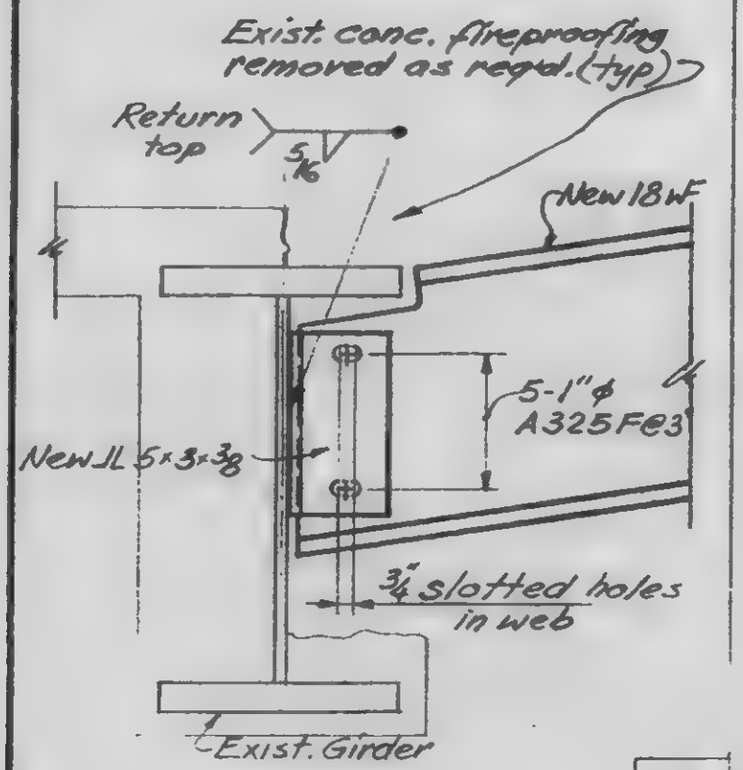

A

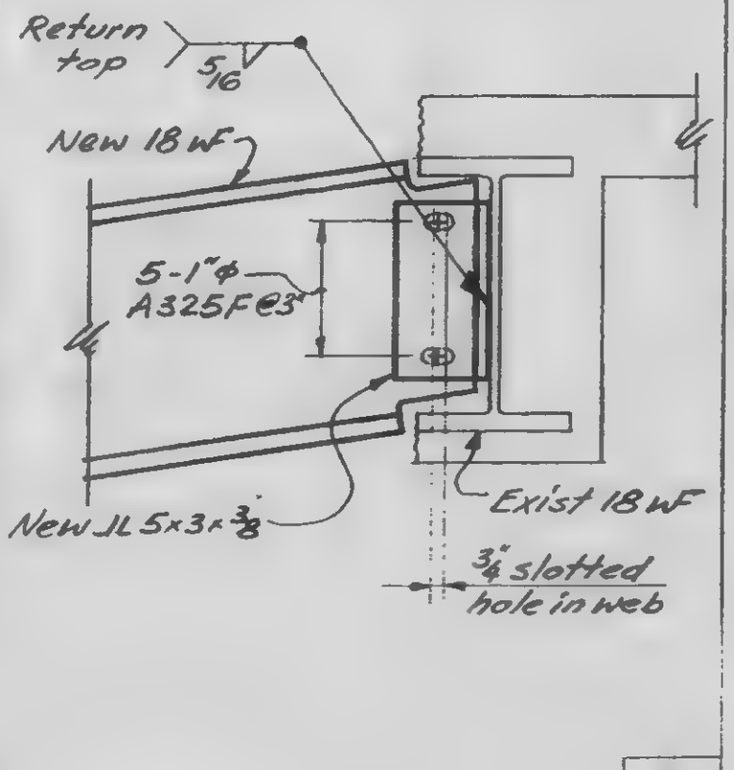

B

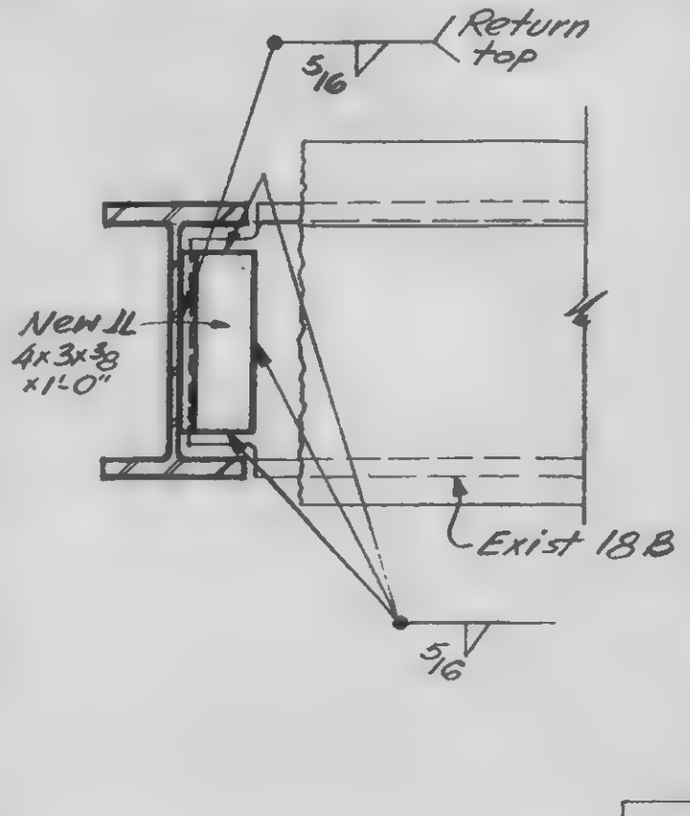

C

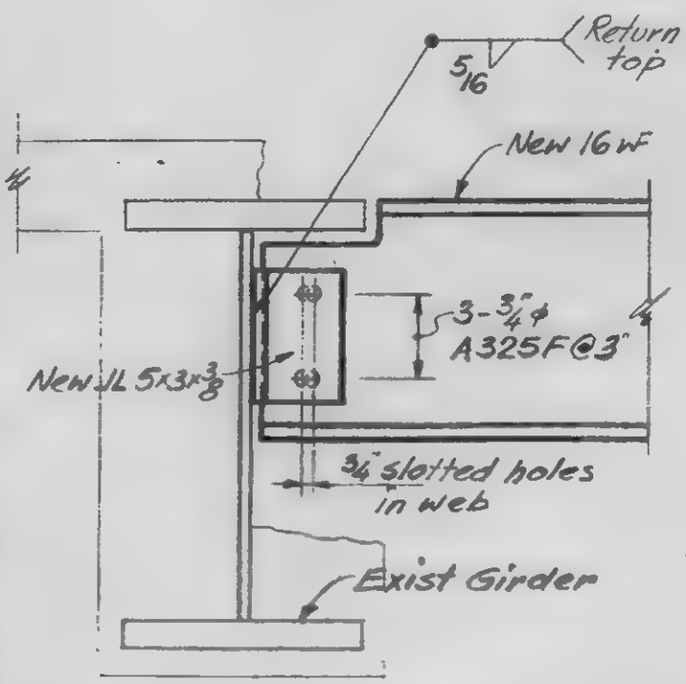

D

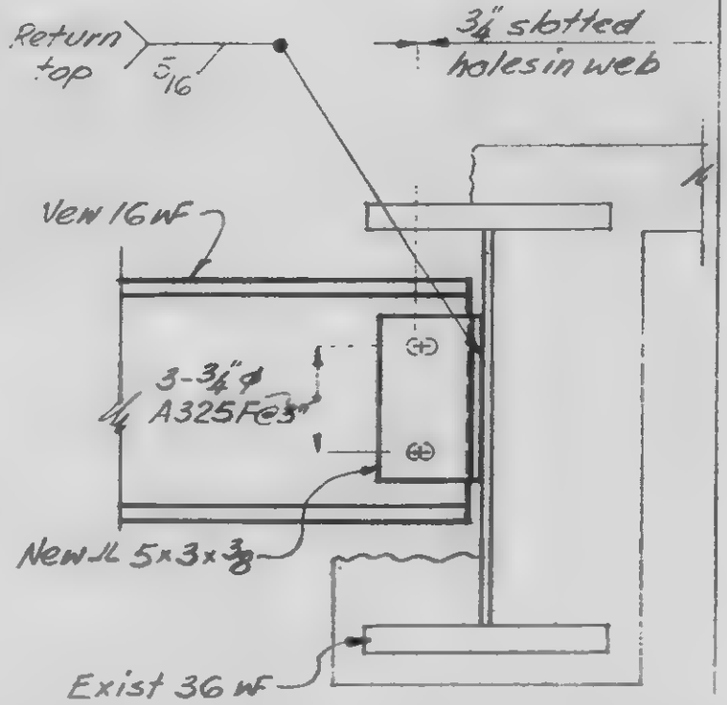

E

LICENSED PROFESSIONAL ENGINEER — LESLIE E. ROBERTSON — No. 34360 — UNIVERSITY OF THE STATE OF NEW YORK

DESIGNED

DRAWN

REVIEWED

13-K11.2-1

SKILLING, HELLE, CHRISTIANSEN, ROBERTSON — Structural & Civil Engineers

PROJECT THE WORLD TRADE CENTER | TITLE EL. 310 - ZONE K5 - STAIR 8 - CONN. DETAIL | DATE 5-7-73

REVISIONS

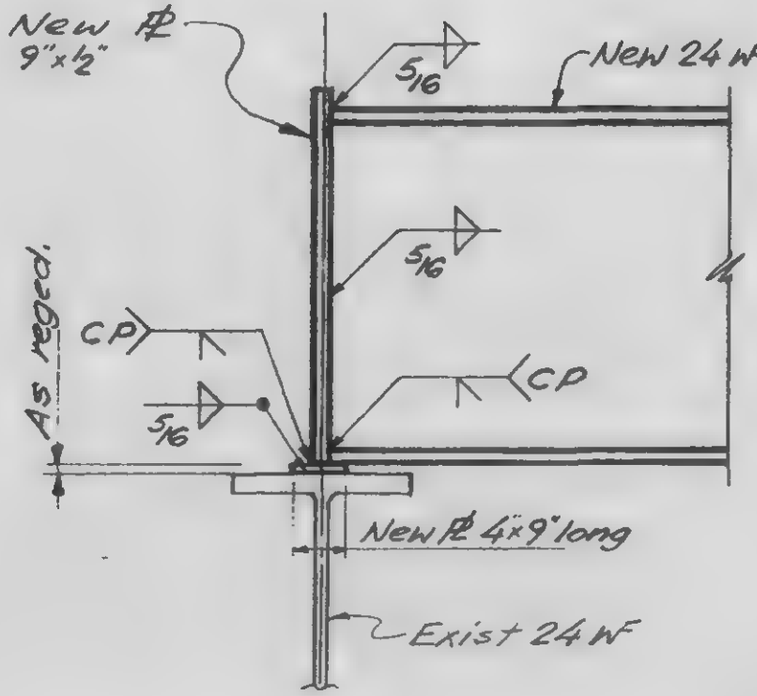

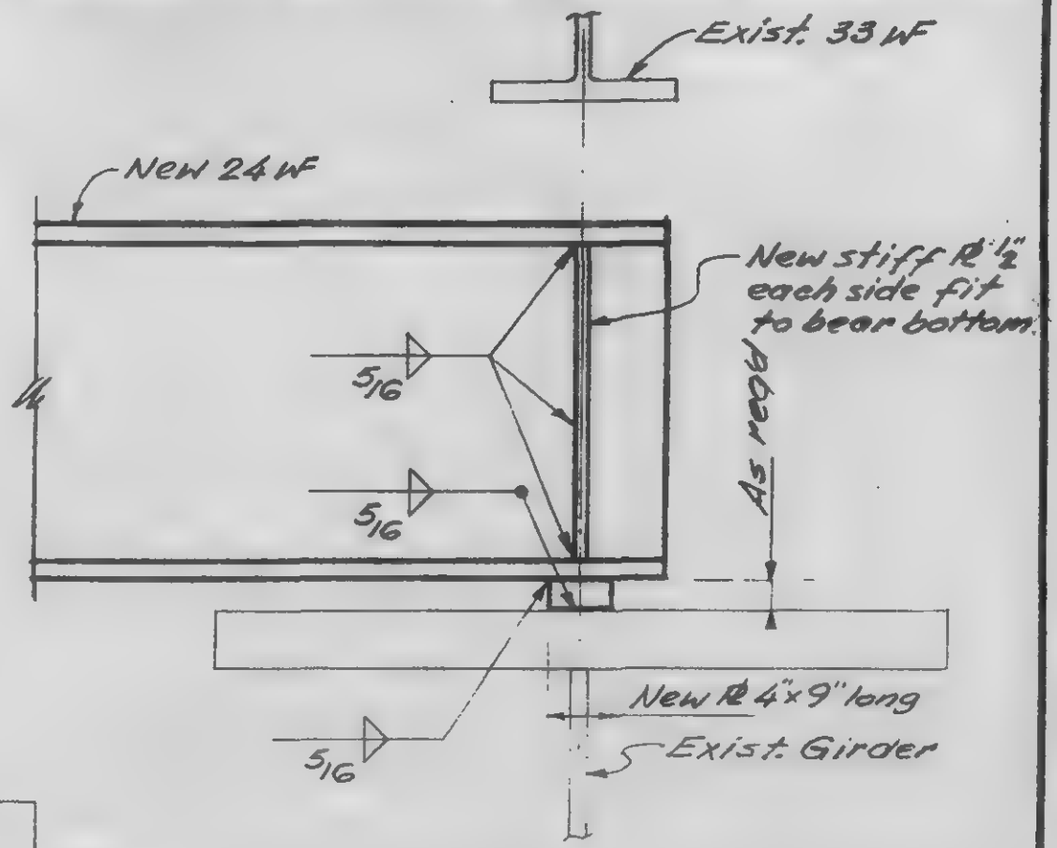

A | B

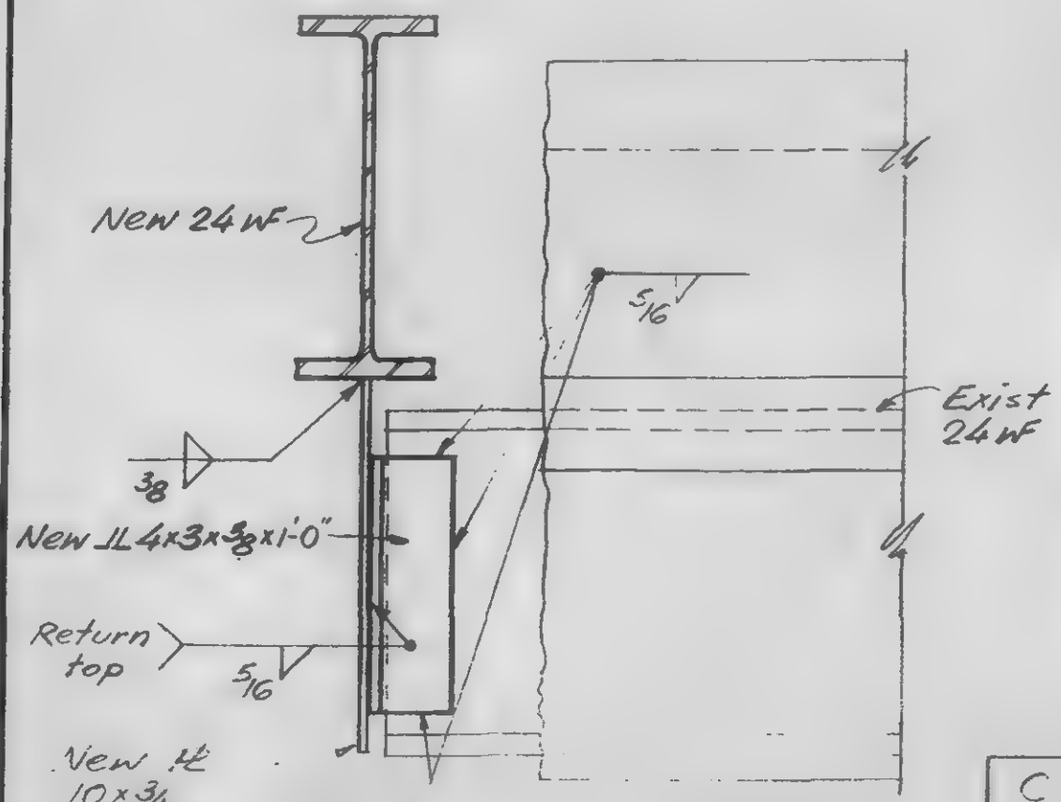

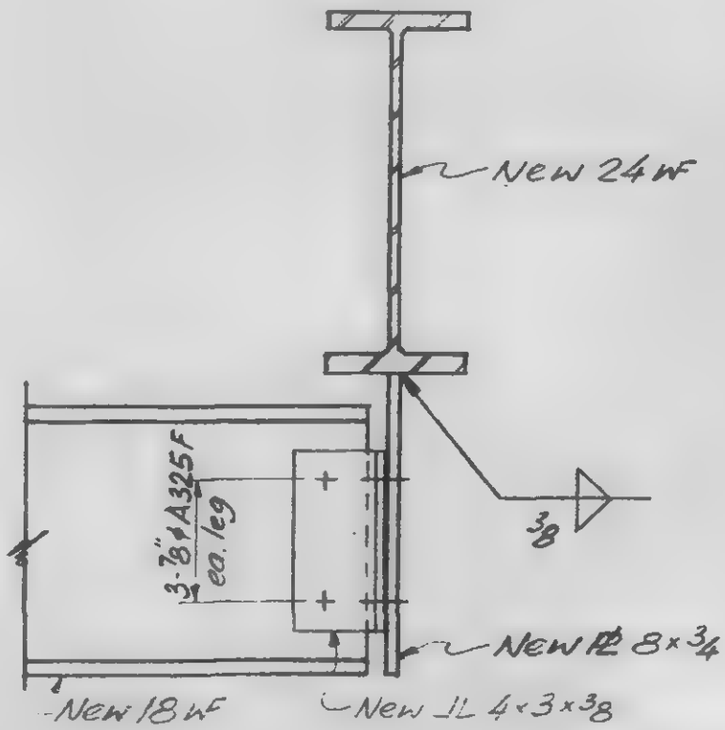

C | D

LICENSED PROFESSIONAL ENGINEER — LESLIE E. ROBERTSON — No. 34360 — UNIVERSITY OF THE STATE OF NEW YORK

DESIGNED

DRAWN John Graccas

REVIEWED

13-K11.2-2.1

SKILLING, HELLE, CHRISTIANSEN, ROBERTSON — Structural & Civil Engineers

PROJECT THE WORLD TRADE CENTER | TITLE EL 310 - ZONE K5 - STAIR 8 - CONN. DET. | DATE 5-7-73

REVISIONS

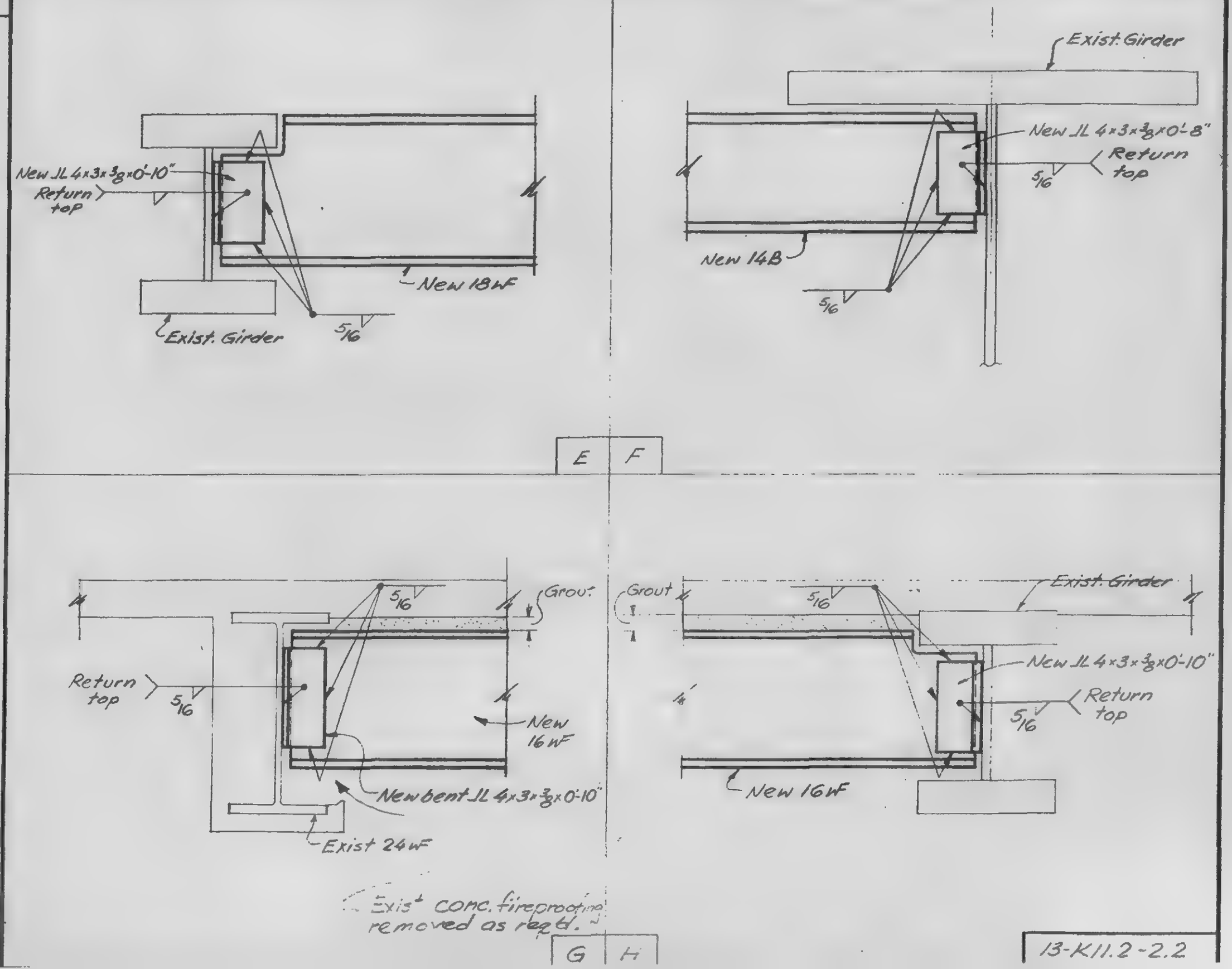

LICENSED PROFESSIONAL ENGINEER LESLIE E. ROBERTSON No. 34360 UNIVERSITY OF THE STATE OF NEW YORK

DESIGNED

DRAWN John Greenwood

REVIEWED WAB

13-K11.2-2.2

SKILLING, HELLE, CHRISTIANSEN, ROBERTSON — Structural & Civil Engineers

PROJECT THE WORLD TRADE CENTER | TITLE EL.310 - ZONE K5-STAIR 8-CONN. DETAILS | DATE 5-7-73

REVISIONS

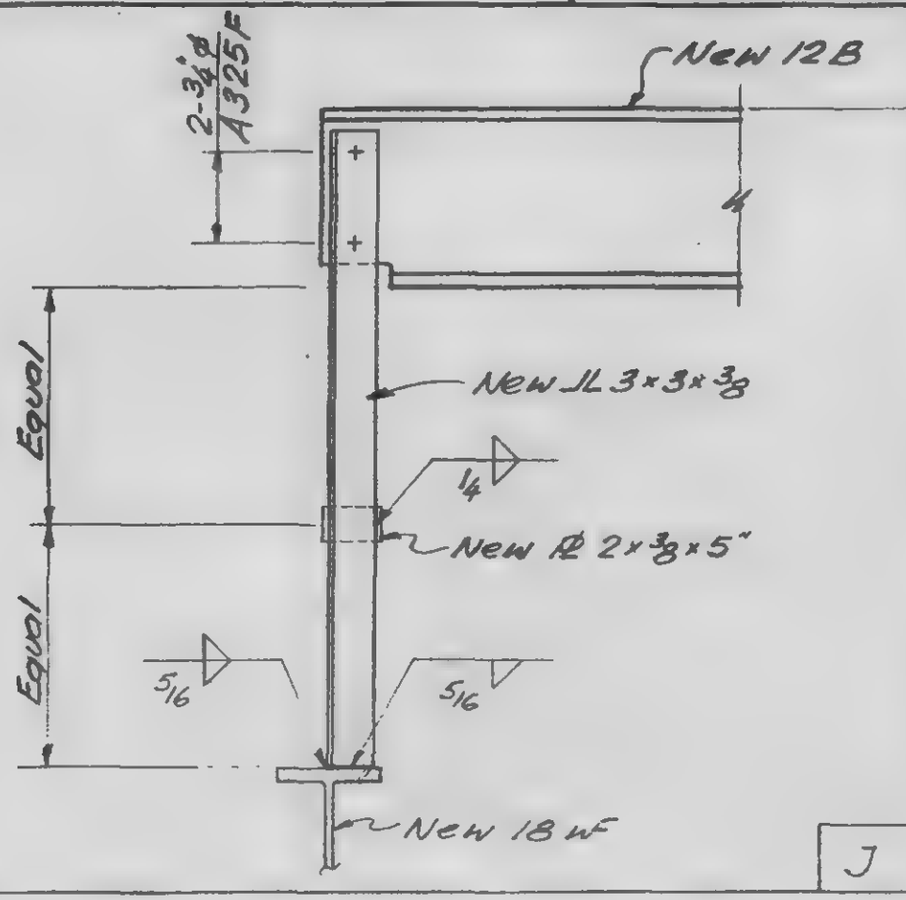

J

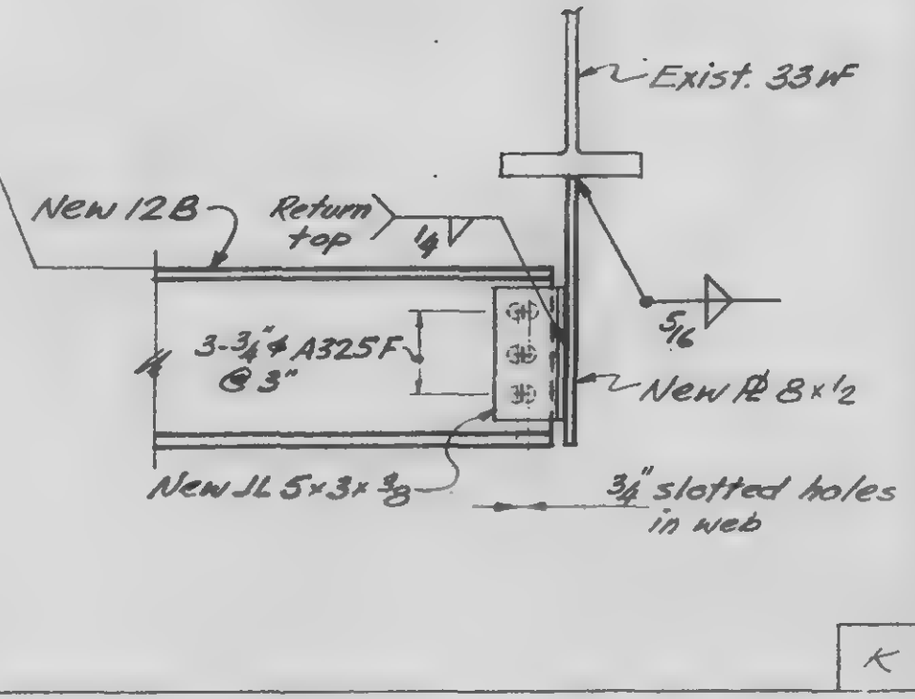

K

LICENSED PROFESSIONAL ENGINEER
LESLIE E. ROBERTSON
No. 34360
UNIVERSITY OF THE STATE OF NEW YORK

DESIGNED

DRAWN

REVIEWED

13-K11.2-2.3

SKILLING, HELLE, CHRISTIANSEN, ROBERTSON — Structural & Civil Engineers

PROJECT: THE WORLD TRADE CENTER | TITLE: EL. 310 - ZONE K.5 -- F.A. INTAKE-CONN. DETAILS | DATE: 5-7-73

REVISIONS

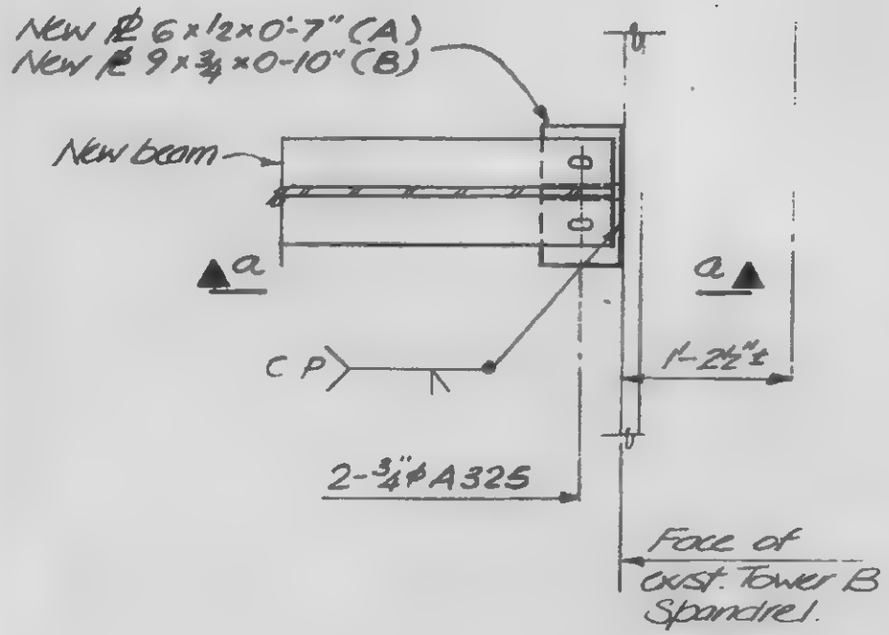

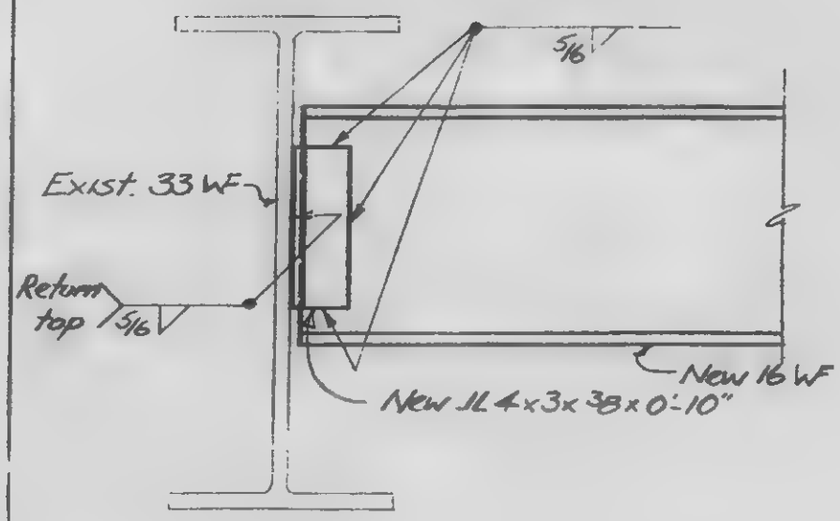

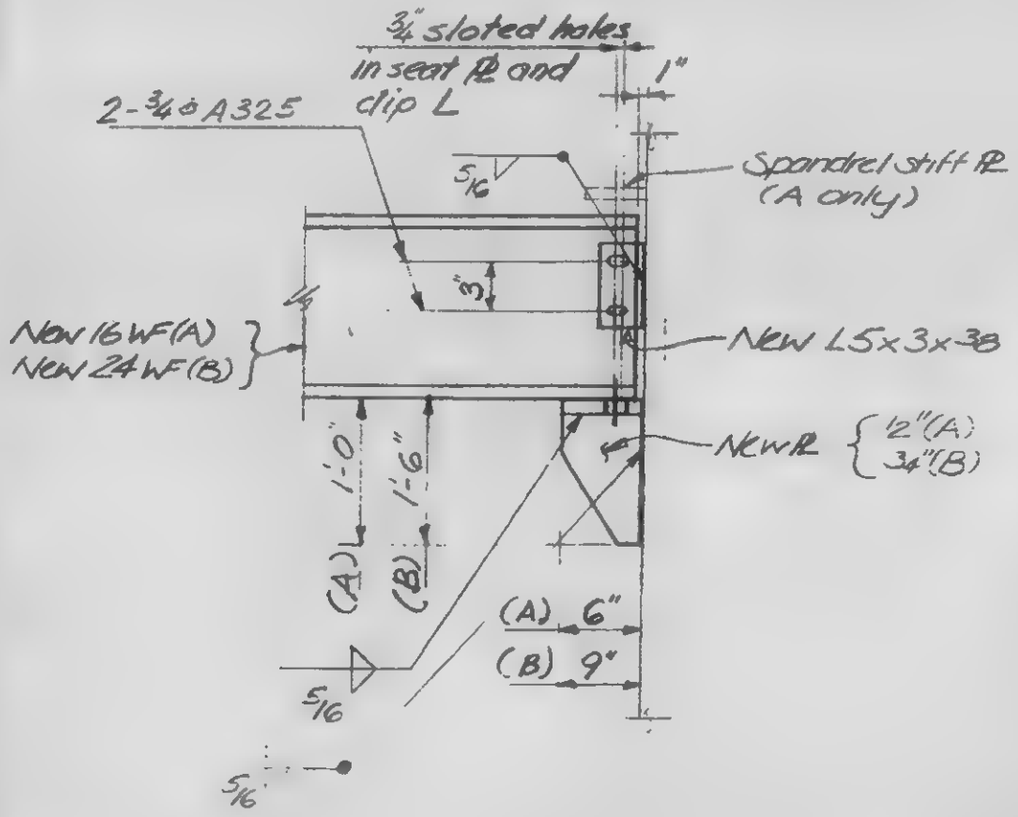

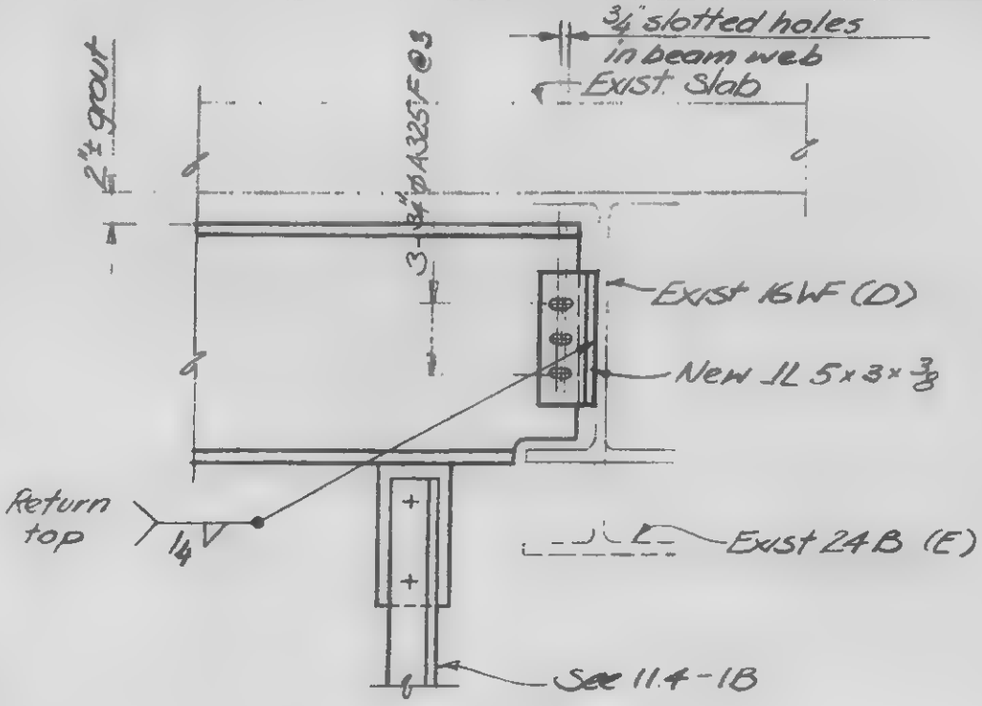

LICENSED PROFESSIONAL ENGINEER — LESLIE E. ROBERTSON — No 34360 — UNIVERSITY OF THE STATE OF NEW YORK

DESIGNED K. Chiang
DRAWN
REVIEWED

13-K11.2-3.1

SKILLING, HELLE, CHRISTIANSEN, ROBERTSON — Structural & Civil Engineers

PROJECT: THE WORLD TRADE CENTER | TITLE: EL. 310 ZONE K-F.A. INTAKE CONN. DETAILS | DATE: 5-7-73

REVISIONS

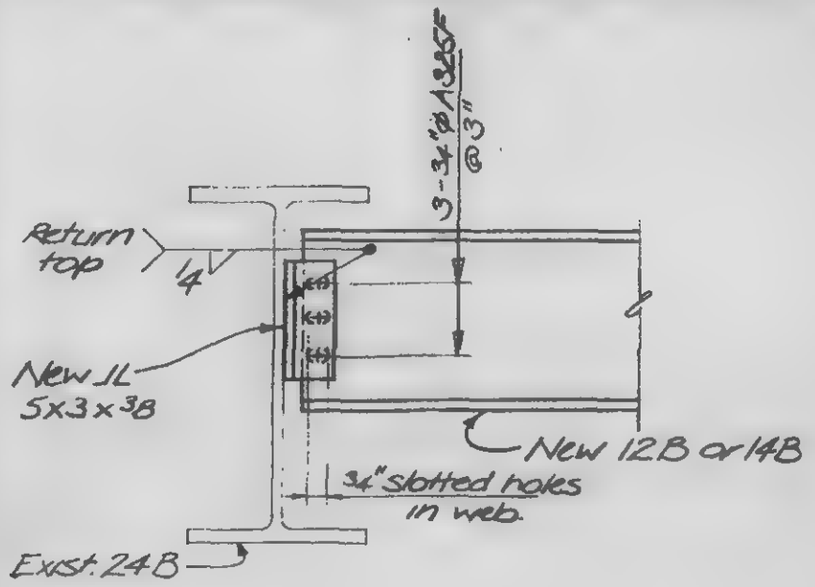

F

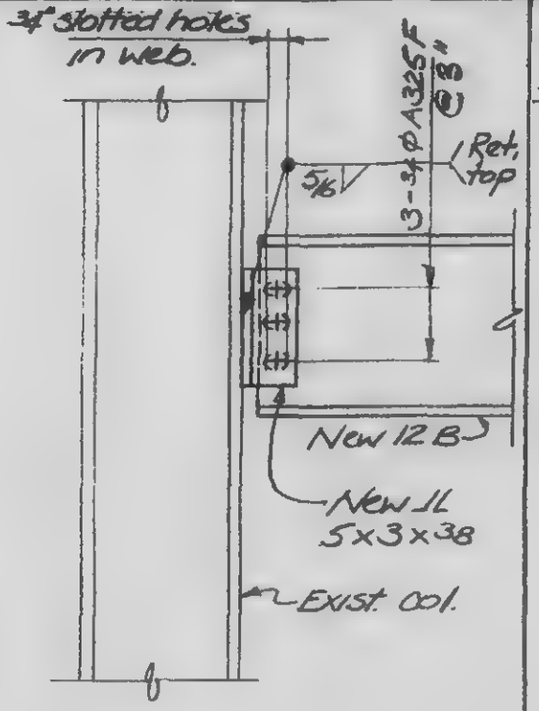

G

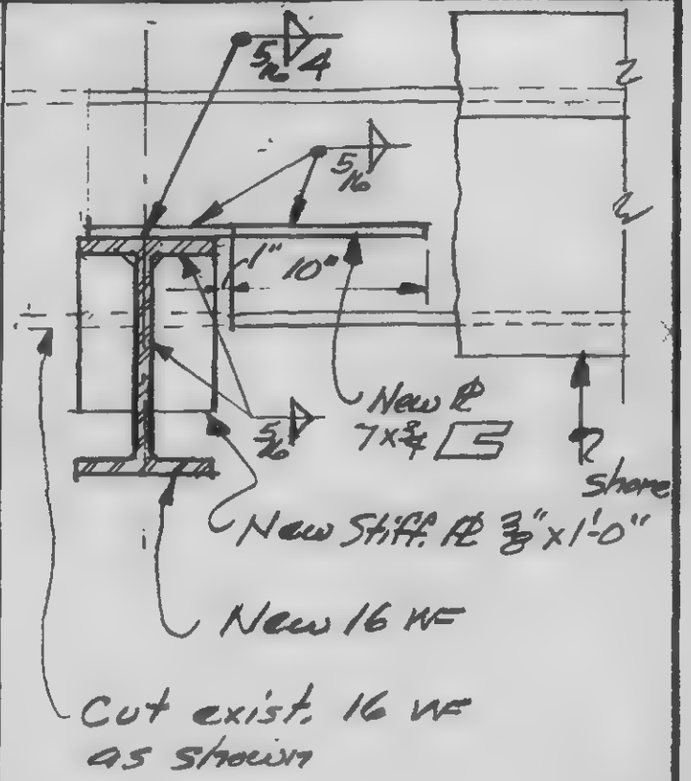

H

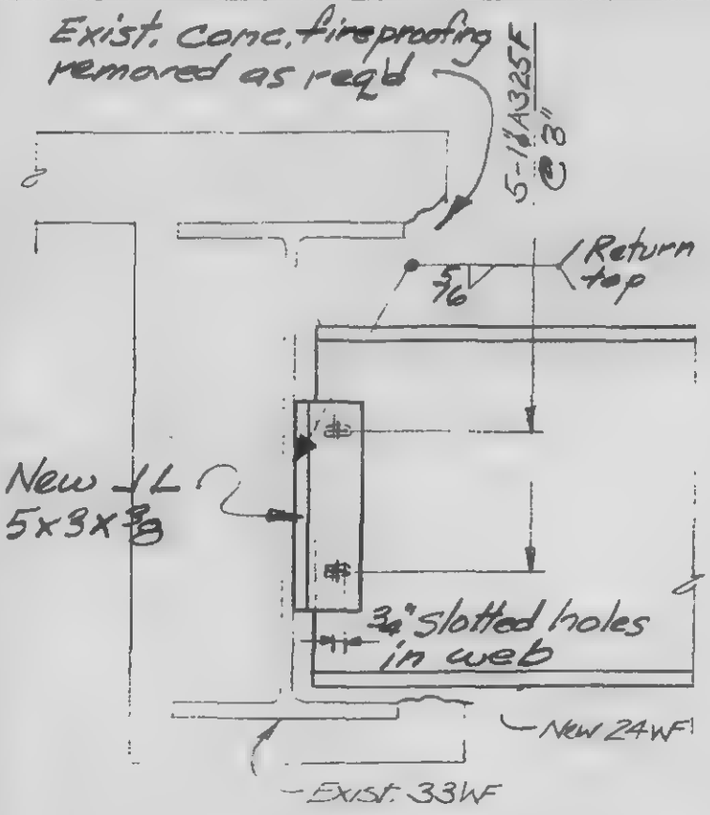

J

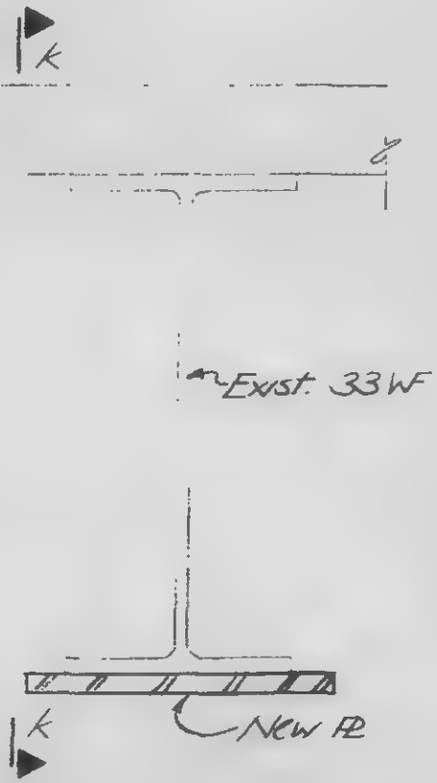

K k

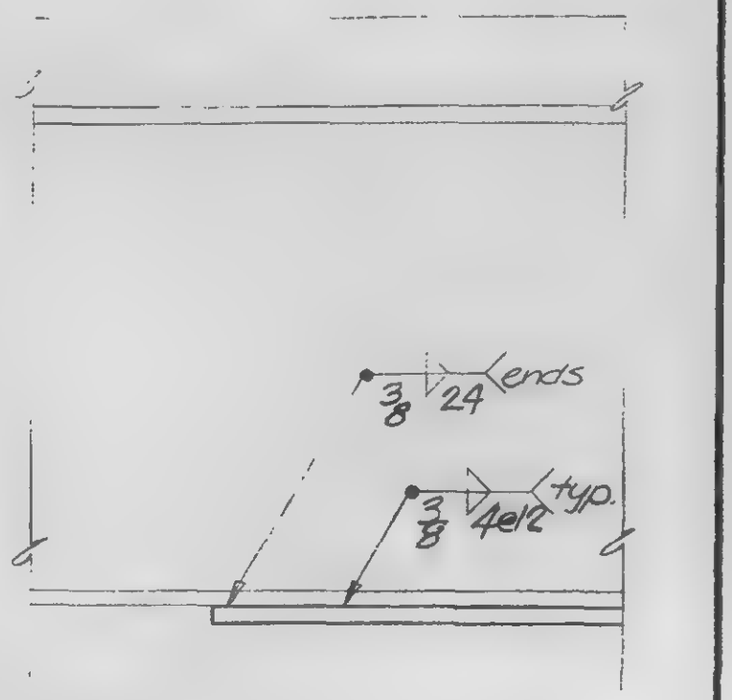

LICENSED PROFESSIONAL ENGINEER — LESLIE E. ROBERTSON — No 34360 — UNIVERSITY OF THE STATE OF NEW YORK

DESIGNED

Banks

REVIEWED

Drab

13-K11.2-3.2

SKILLING, HELLE, CHRISTIANSEN, ROBERTSON — Structural & Civil Engineers

PROJECT	TITLE	DATE
THE WORLD TRADE CENTER	El. 310 - ZONE K5 - SERVICE ELEV. - CONN. DETAILS	5-7-73

REVISIONS

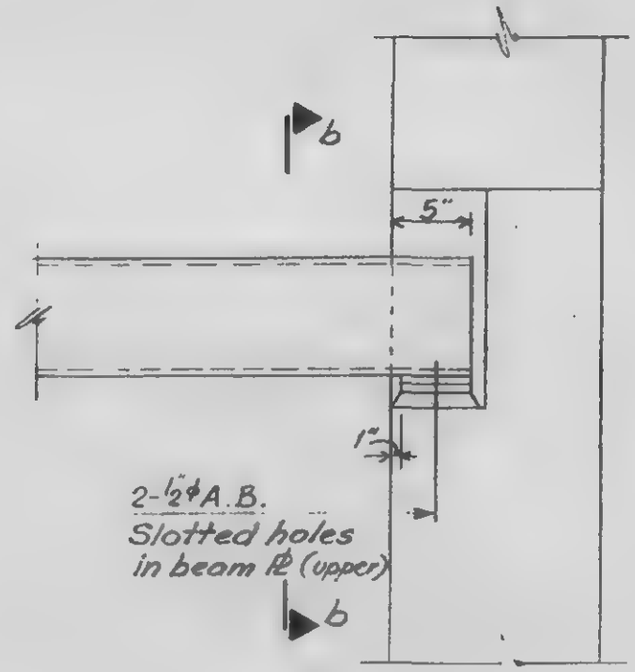

A
a

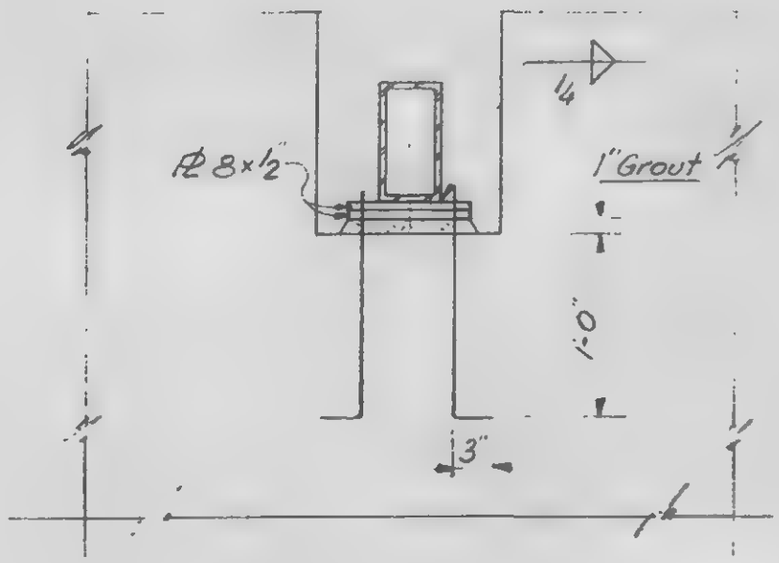

LICENSED PROFESSIONAL ENGINEER
LESLIE E. ROBERTSON
No 34360
UNIVERSITY OF THE STATE OF NEW YORK

DESIGNED K. Chiang
DRAWN
REVIEWED

13-K11.2-4.1

SKILLING, HELLE, CHRISTIANSEN, ROBERTSON — Structural & Civil Engineers

PROJECT THE WORLD TRADE CENTER

TITLE EL. 310 - ZONE K5 - SERVICE ELEV. - CONN. DETAILS

DATE 5-7-73

REVISIONS

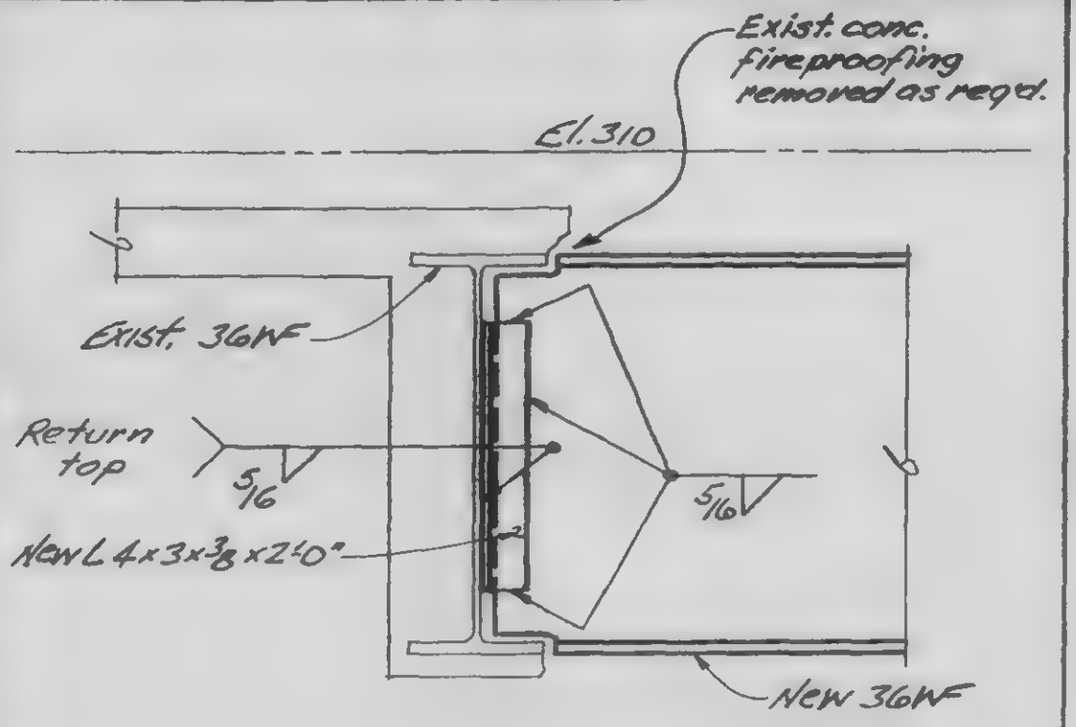

C

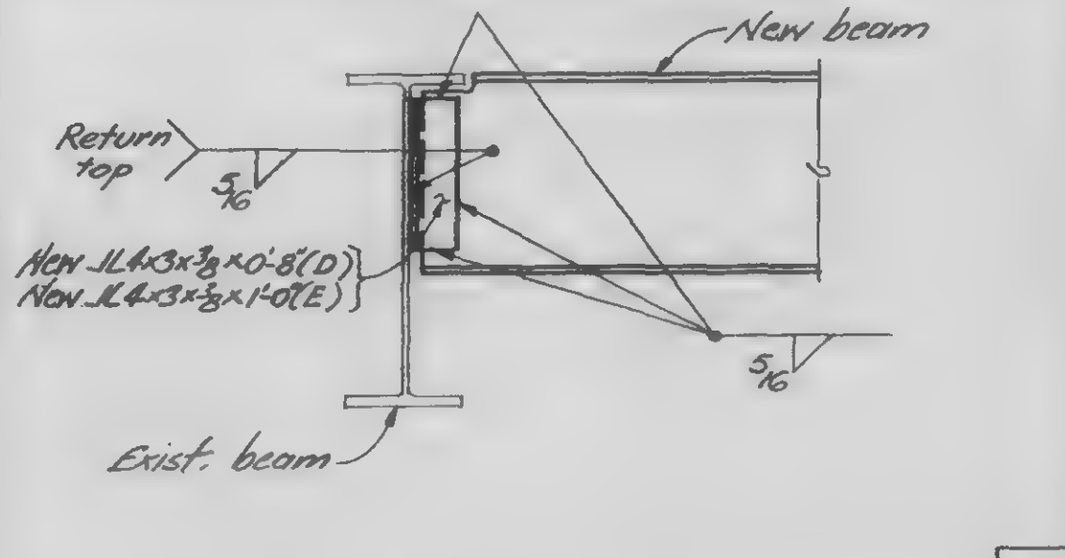

D

E

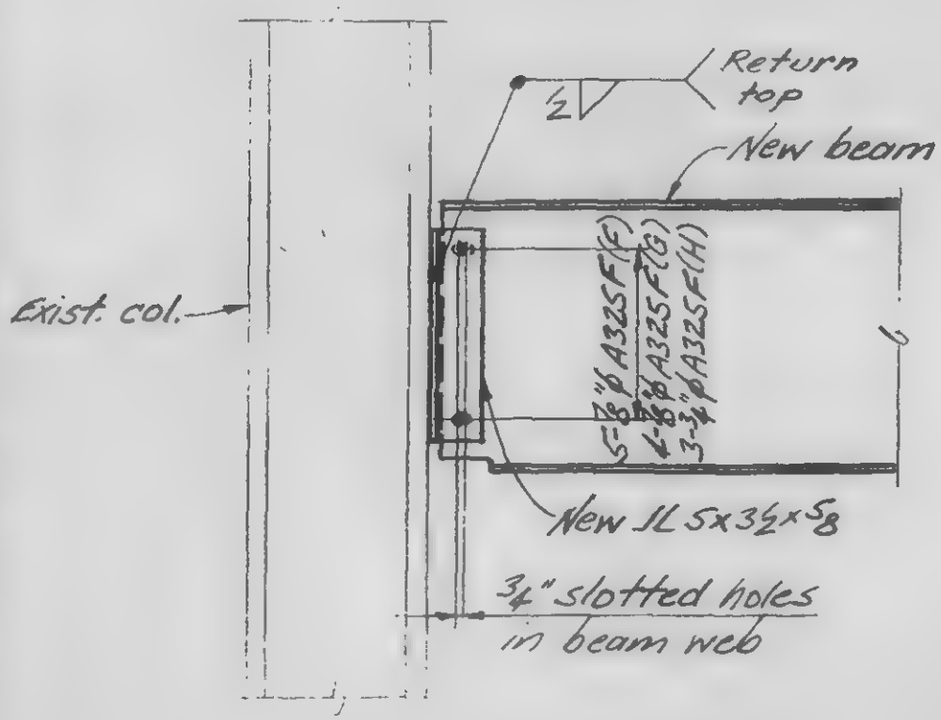

F

G

H

K

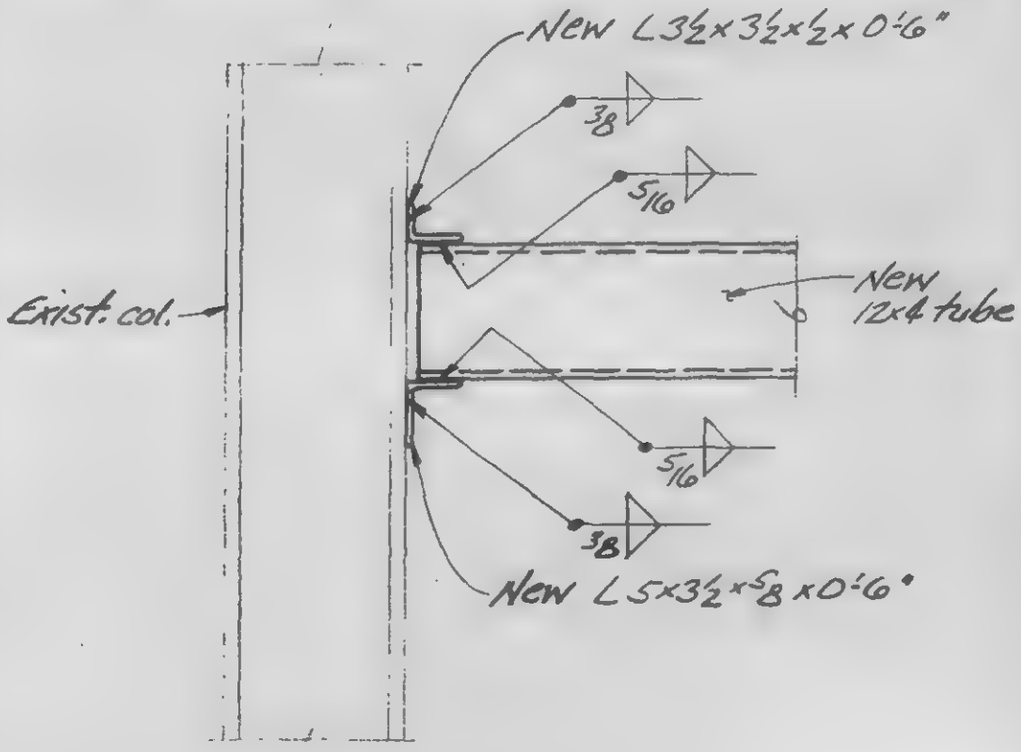

LICENSED PROFESSIONAL ENGINEER
LESLIE E. ROBERTSON
No 34360
UNIVERSITY OF THE STATE OF NEW YORK

DESIGNED

DRAWN J. A.

REVIEWED

13-K-11.2-4.2

SKILLING, HELLE, CHRISTIANSEN, ROBERTSON — Structural & Civil Engineers

PROJECT: THE WORLD TRADE CENTER | TITLE: EL 310 - ZONE K3 - ESC. H3 & 4 - CONN. DETAILS | DATE: 5-7-73

REVISIONS

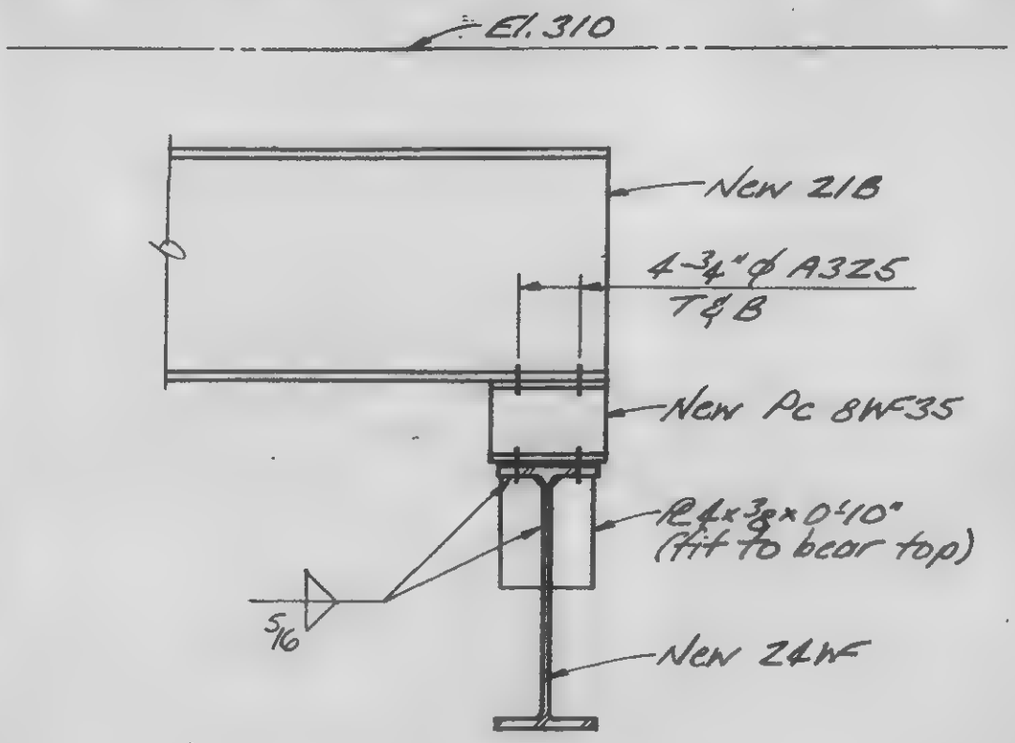

A

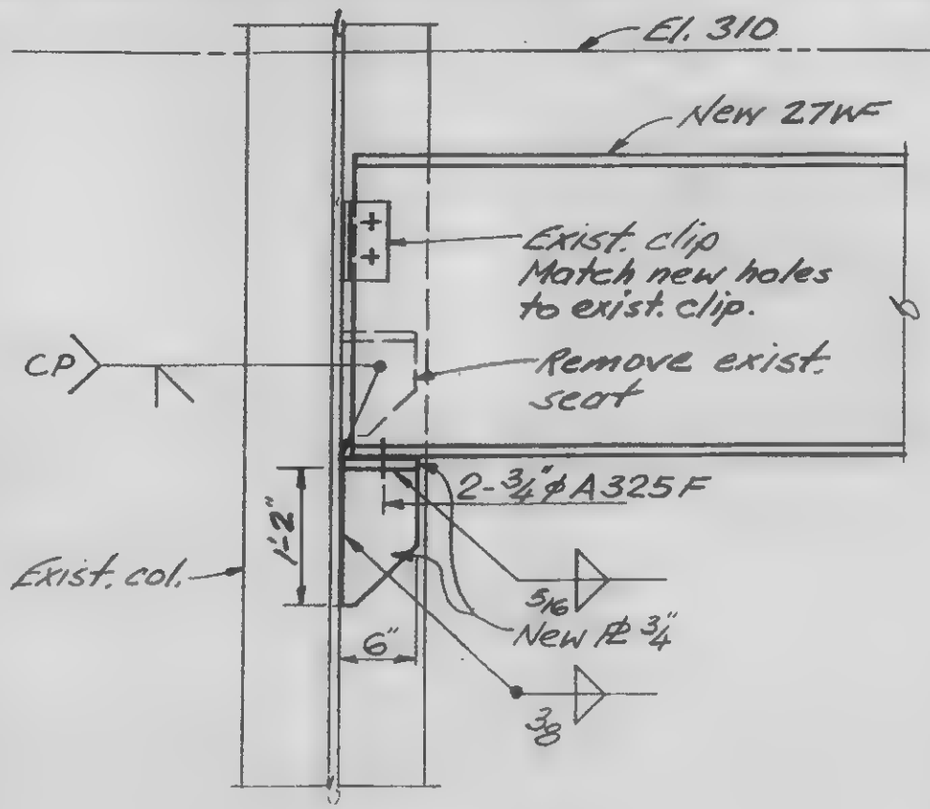

B

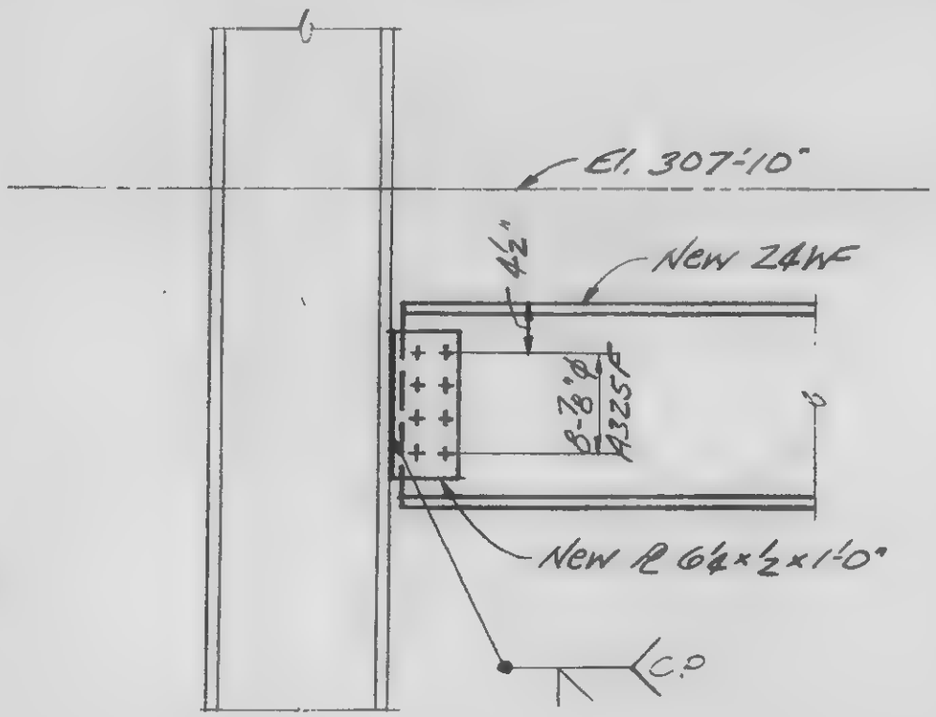

C

D

E

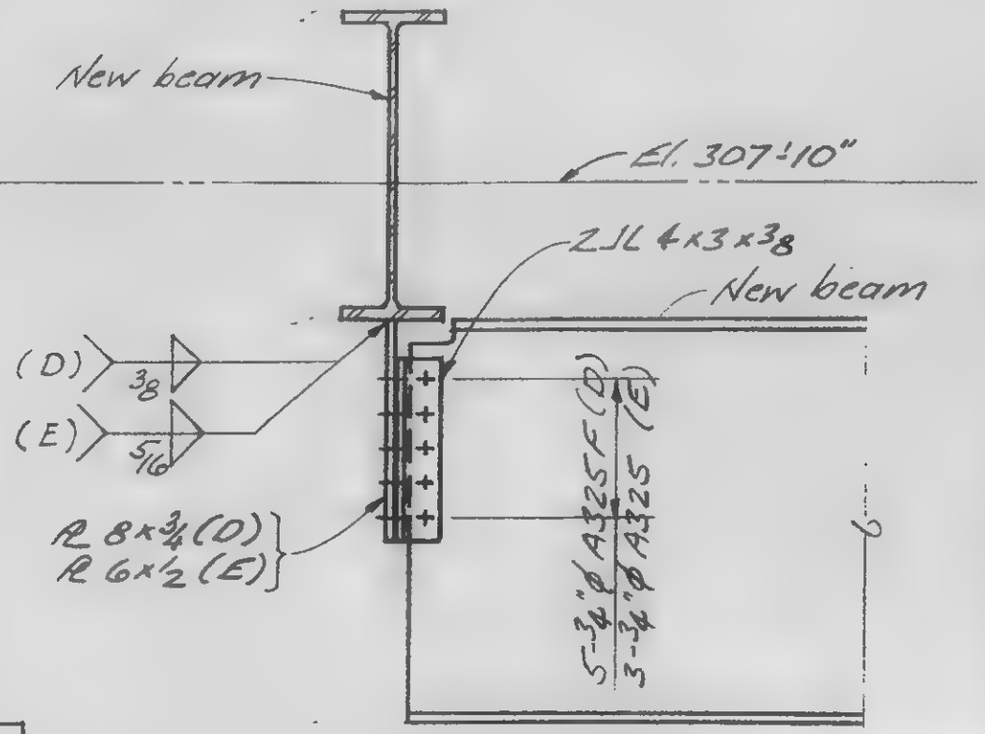

13-K11.2-5.1

LICENSED PROFESSIONAL ENGINEER — LESLIE E. ROBERTSON — No 34360 — UNIVERSITY OF THE STATE OF NEW YORK

DESIGNED KC

DRAWN JA

REVIEWED WAB

SKILLING, HELLE, CHRISTIANSEN, ROBERTSON — Structural & Civil Engineers

PROJECT: THE WORLD TRADE CENTER

TITLE: EL 310 ZONE K5 ESC. H3 & 4 CONN. DETAIL

DATE: 5-7-73

REVISIONS

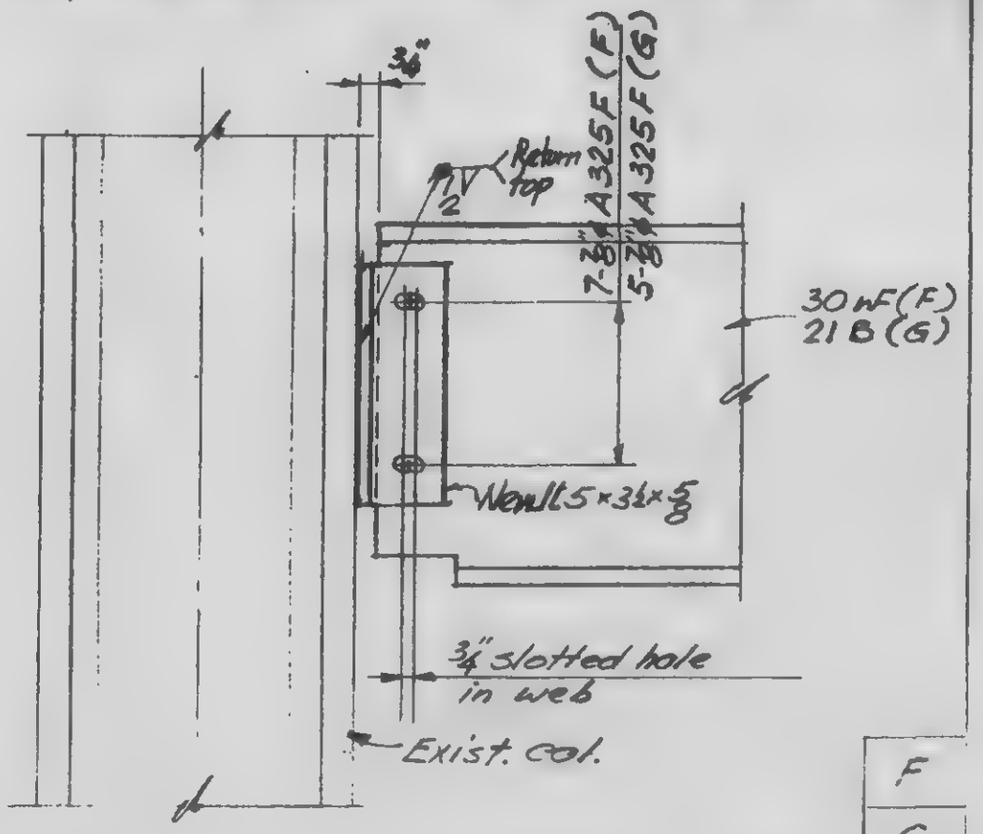

F

G

LICENSED PROFESSIONAL ENGINEER
LESLIE E. ROBERTSON
No 34360
UNIVERSITY OF THE STATE OF NEW YORK

DESIGNED

DRAWN John Fuccillo

REVIEWED WOB

13-K11.2-5.2

SKILLING, HELLE, CHRISTIANSEN, ROBERTSON — Structural & Civil Engineers

PROJECT: THE WORLD TRADE CENTER

TITLE: EL. 310 ZONE K3 & K5 - FIRE DAMAGE - CONN. DETAILS

DATE: 5-7-78

REVISIONS

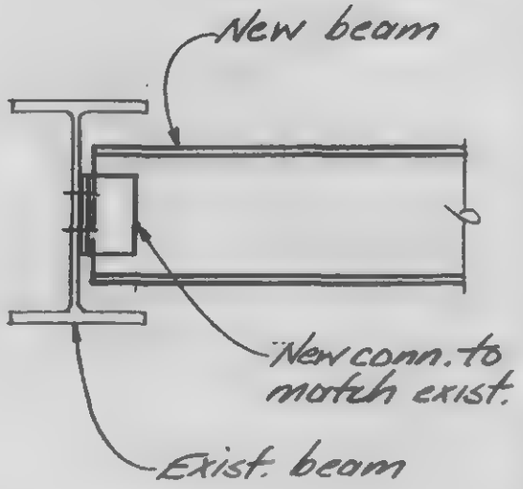

A

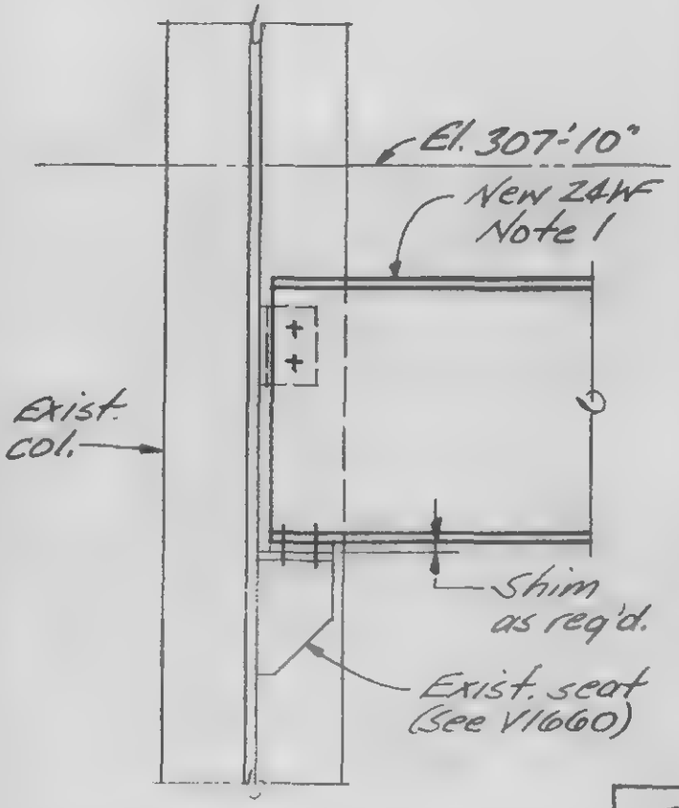

B

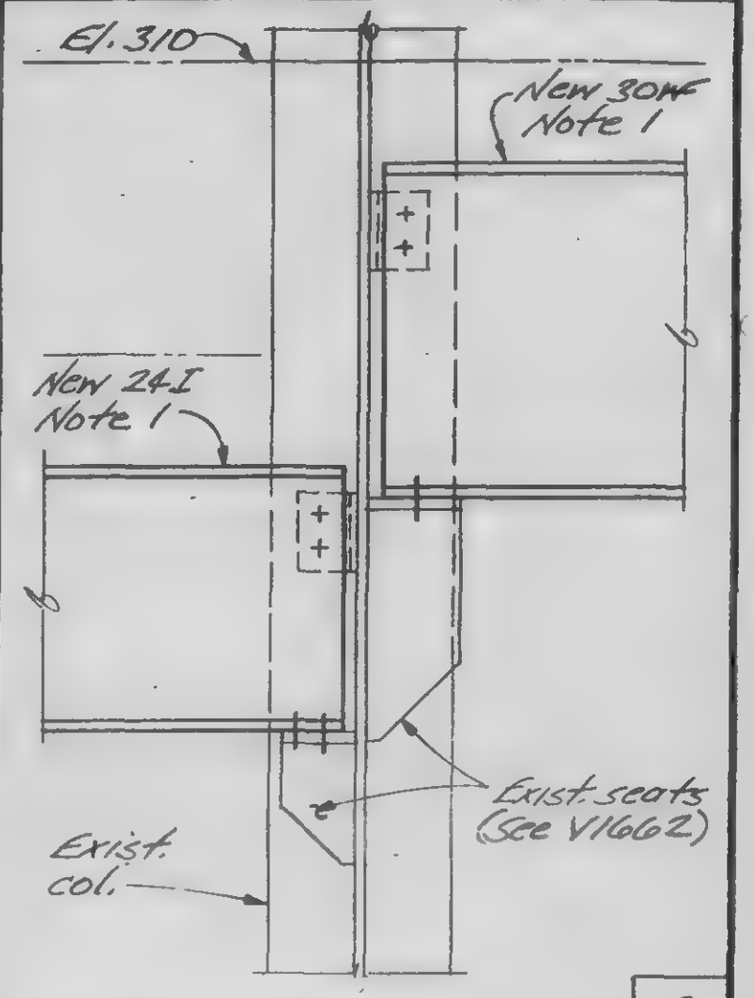

C

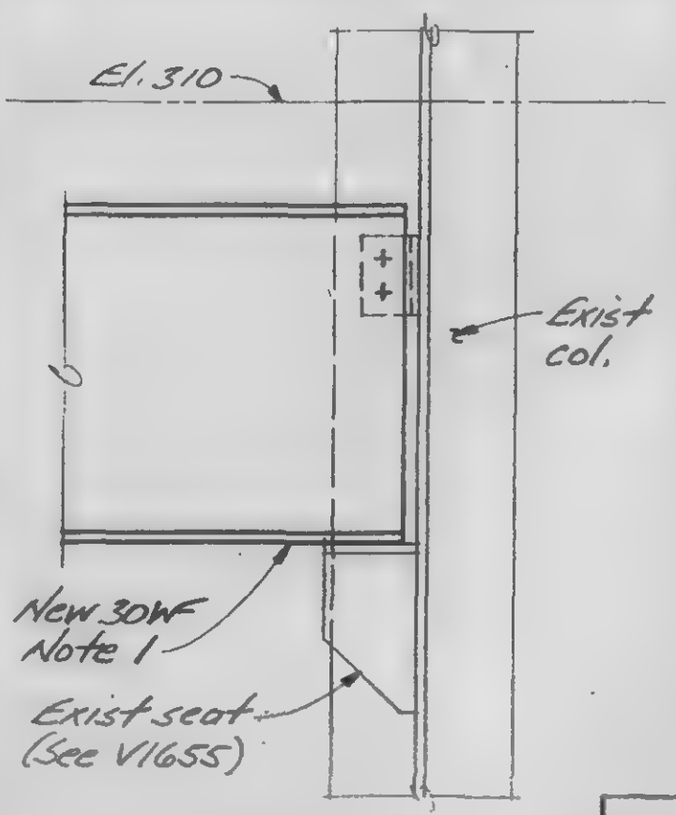

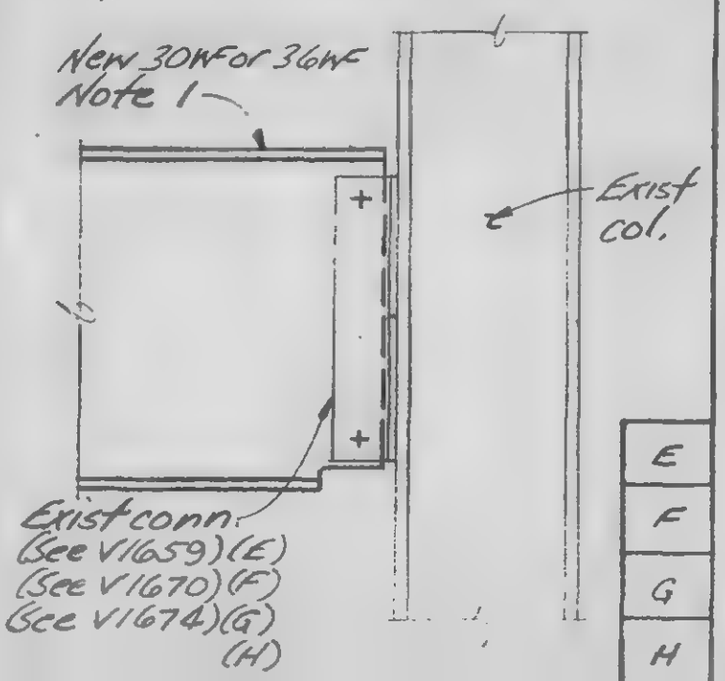

E

F

G

H

Notes:
1. Fabricate new beams to match exist. conn.

LICENSED PROFESSIONAL ENGINEER — LESLIE E. ROBERTSON — No 34360 — UNIVERSITY OF THE STATE OF NEW YORK

DESIGNED

DRAWN J. G.

REVIEWED WAB

13-K11.3-1

SKILLING, HELLE, CHRISTIANSEN, ROBERTSON — Structural & Civil Engineers

PROJECT: THE WORLD TRADE CENTER

TITLE: EL. 310 K3 & K5 - FIRE DAMAGE-CONN. DETAILS

DATE: 5-7-73

REVISIONS

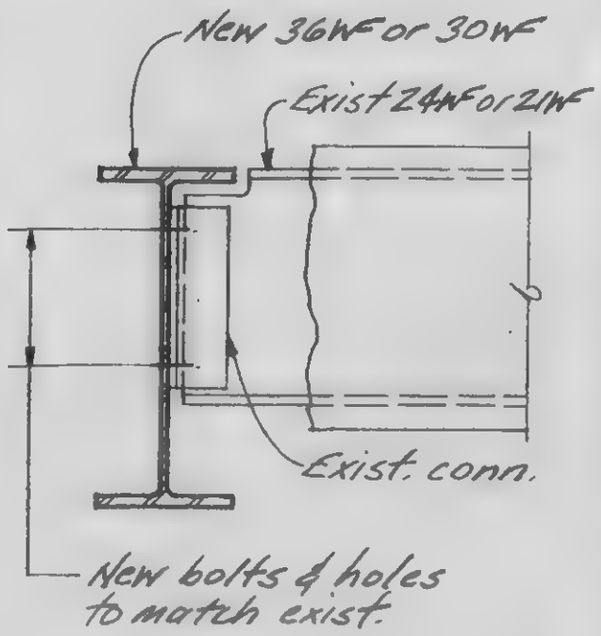

A

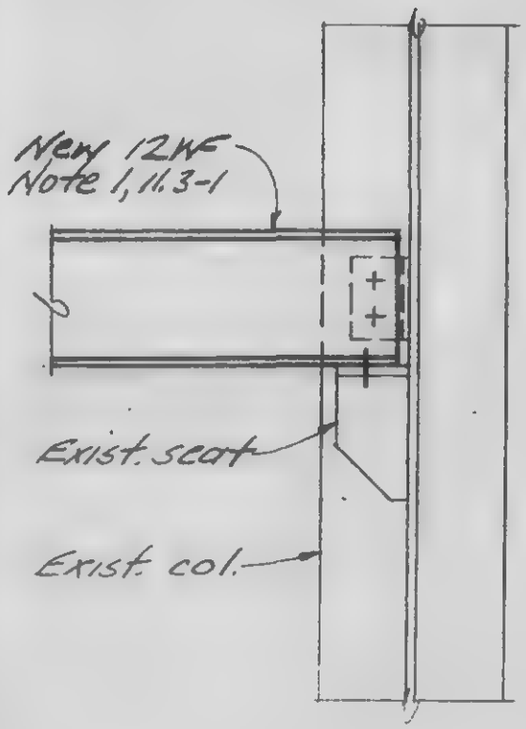

B

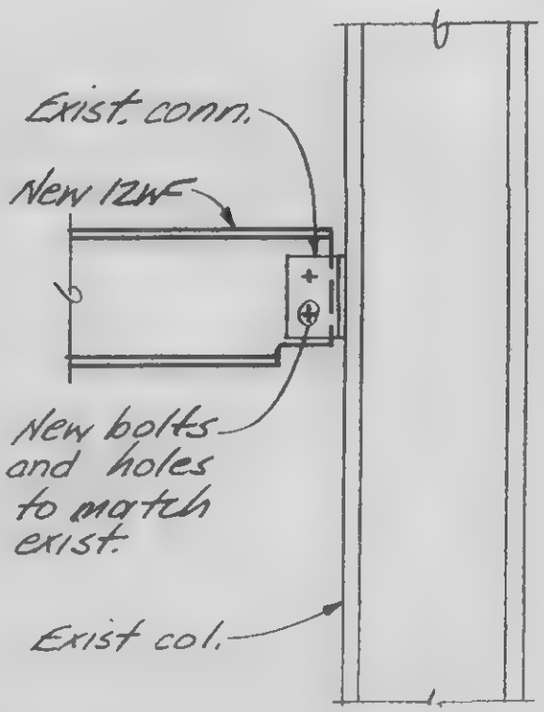

C

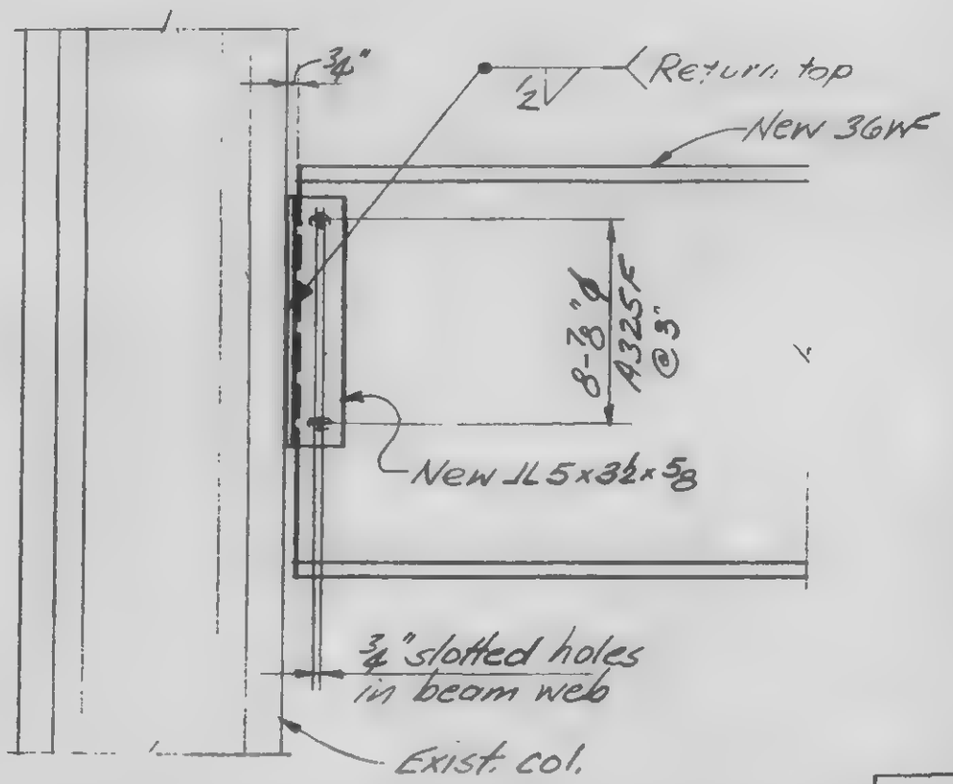

D | E

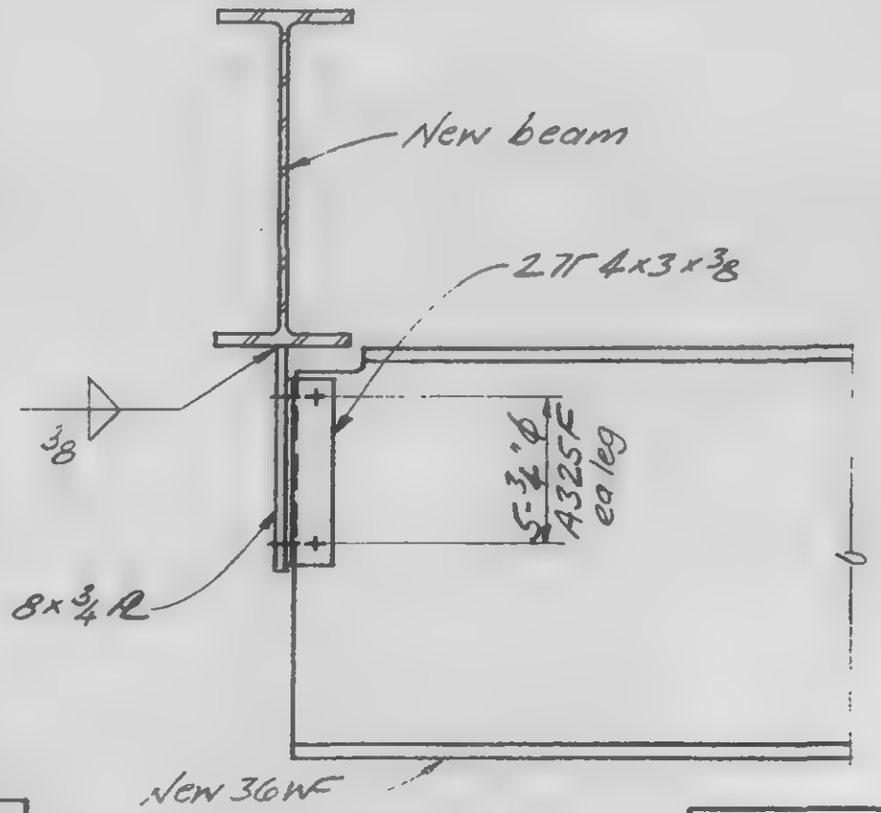

13-K11.3-2

LICENSED PROFESSIONAL ENGINEER — LESLIE E. ROBERTSON — No 34980 — UNIVERSITY OF THE STATE OF NEW YORK

DESIGNED KC

DRAWN JA

REVIEWED WdB

SKILLING, HELLE, CHRISTIANSEN, ROBERTSON — Structural & Civil Engineers

PROJECT: THE WORLD TRADE CENTER | TITLE: EL. 310 - ZONE K-5 - HANGER DETAILS. | DATE: 5-7-73

REVISIONS

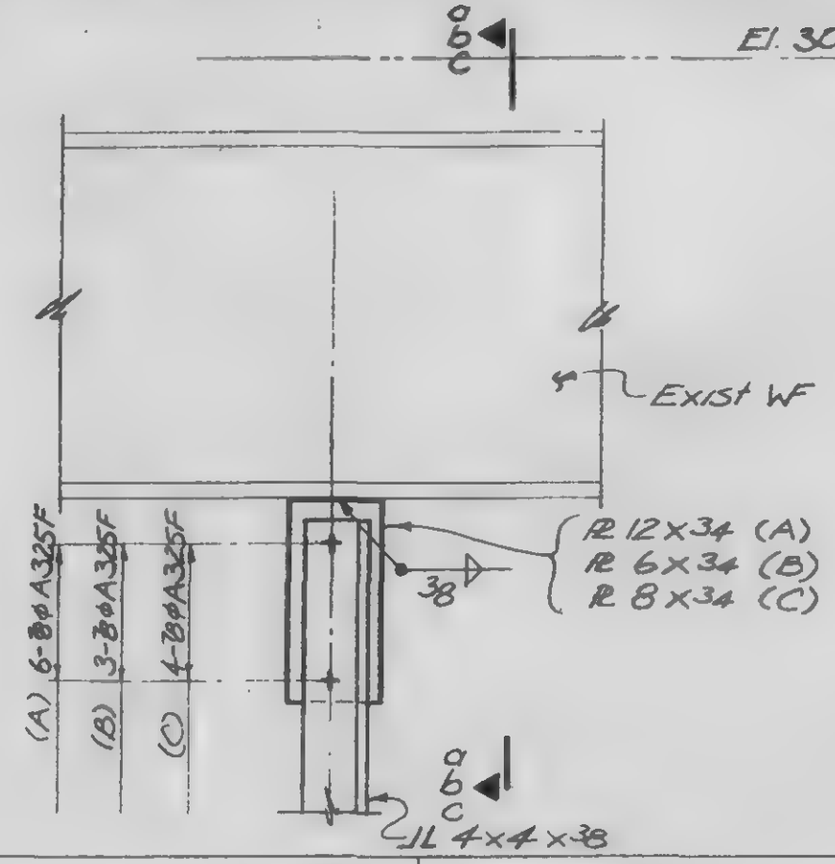

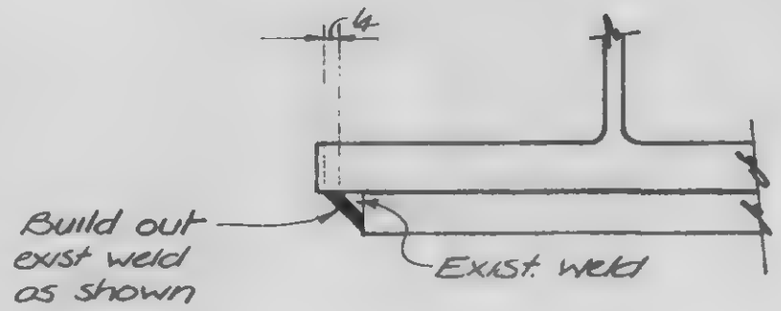

aa

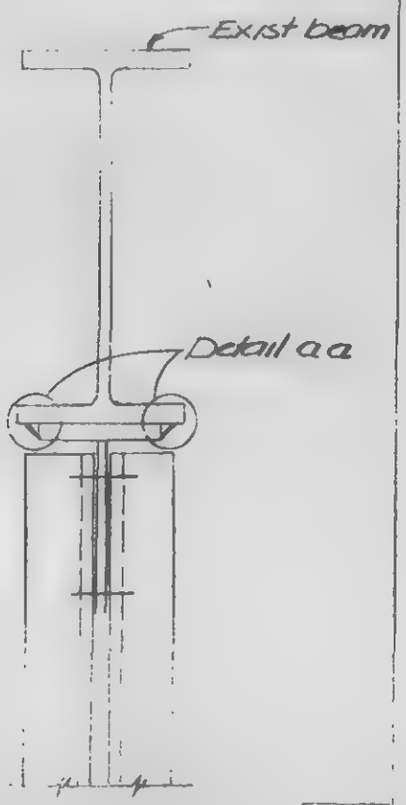

a

b

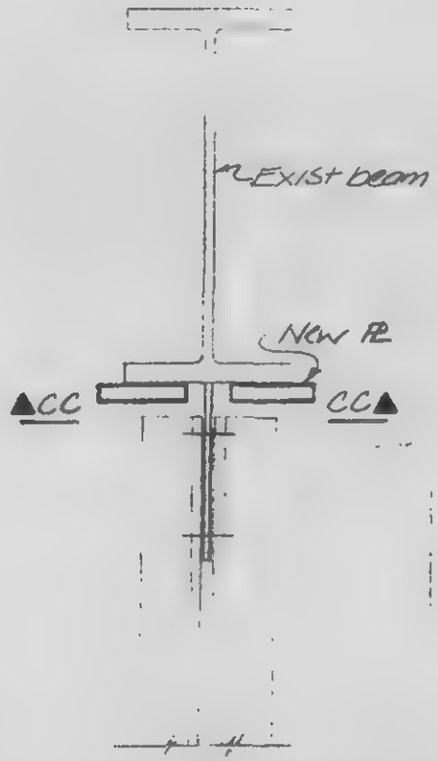

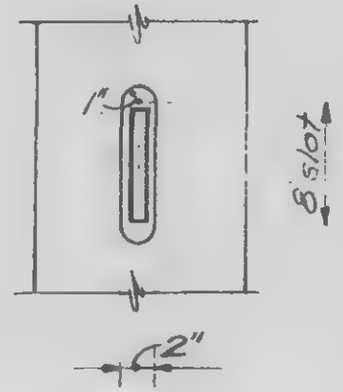

c CC

13-K11.4-1

LICENSED PROFESSIONAL ENGINEER — LESLIE E. ROBERTSON — No. 34360 — UNIVERSITY OF THE STATE OF NEW YORK

DESIGNED L. Chiang
DRAWN J.G.
REVIEWED WAB

SKILLING, HELLE, CHRISTIANSEN, ROBERTSON — Structural & Civil Engineers

PROJECT: THE WORLD TRADE CENTER

TITLE: EL. 303'-6"-ZONE K5-MECH. PLATFORM-CONN. DETAILS

DATE: 5-7-73

REVISIONS

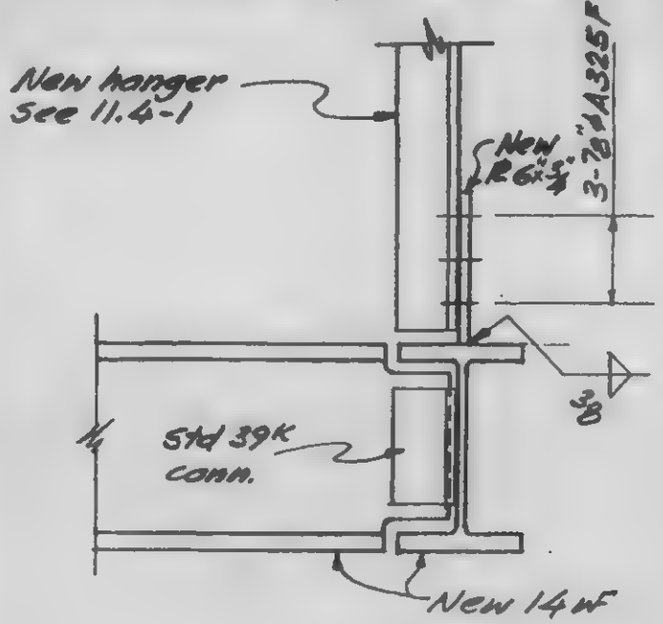

A

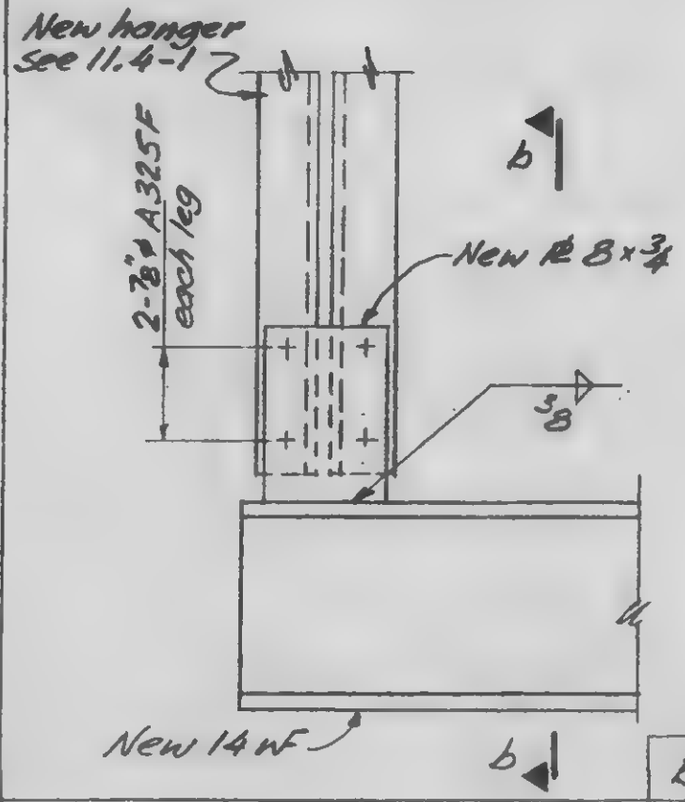

B

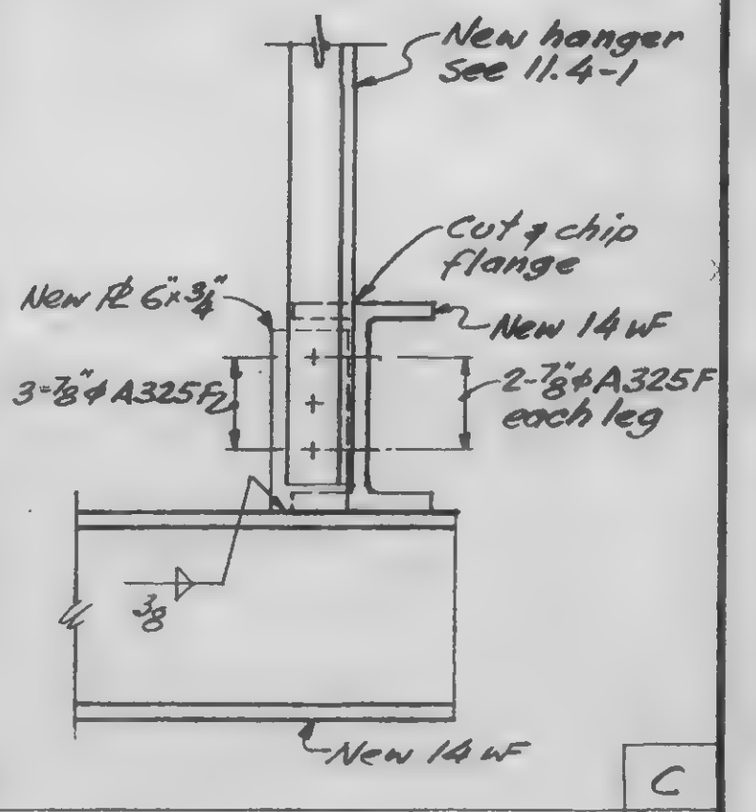

C

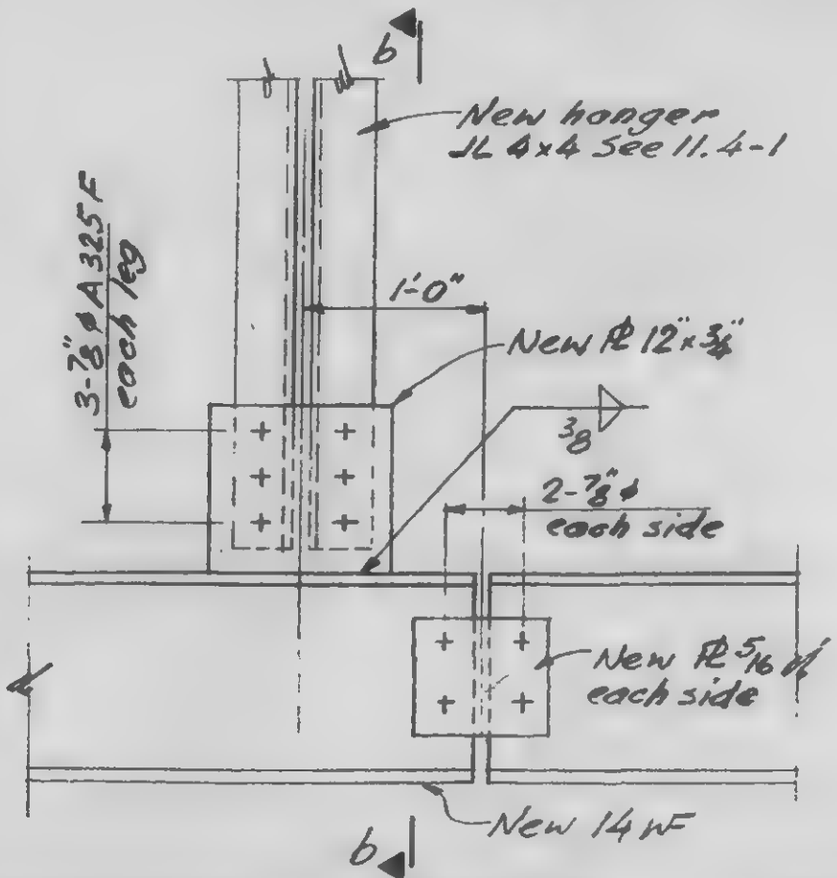

D

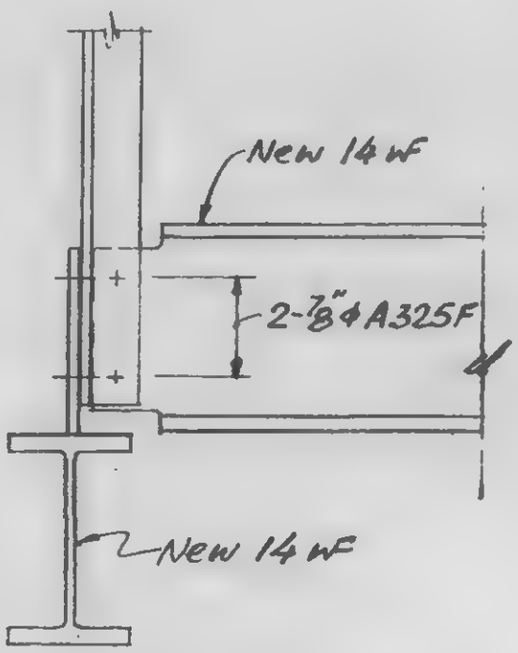

6

LICENSED PROFESSIONAL ENGINEER
LESLIE E. ROBERTSON
No. 34960
UNIVERSITY OF THE STATE OF NEW YORK

DESIGNED

DRAWN John Greaves

REVIEWED LER

13-K11.4-2

SKILLING, HELLE, CHRISTIANSEN, ROBERTSON — Structural & Civil Engineers

PROJECT: THE WORLD TRADE CENTER | TITLE: EL. 303-6 ZONE K5 - MECH. PLATFORM CONN. DETAILS | DATE: 5-7-73

REVISIONS

6-4-73

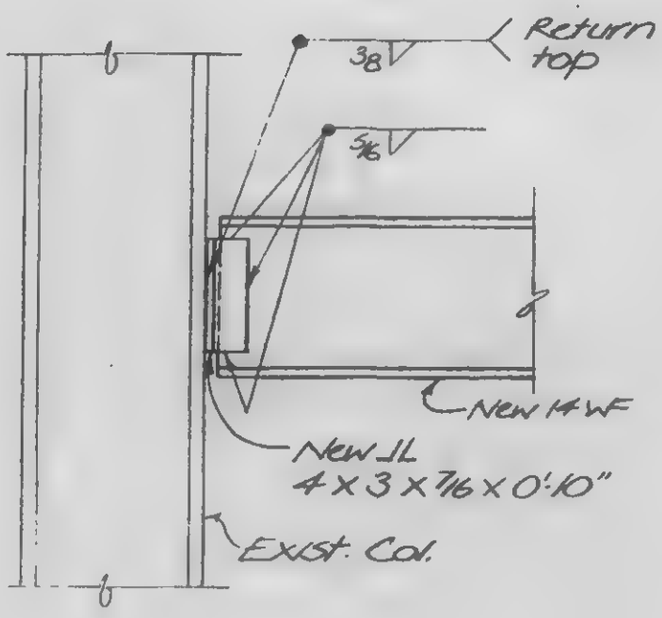

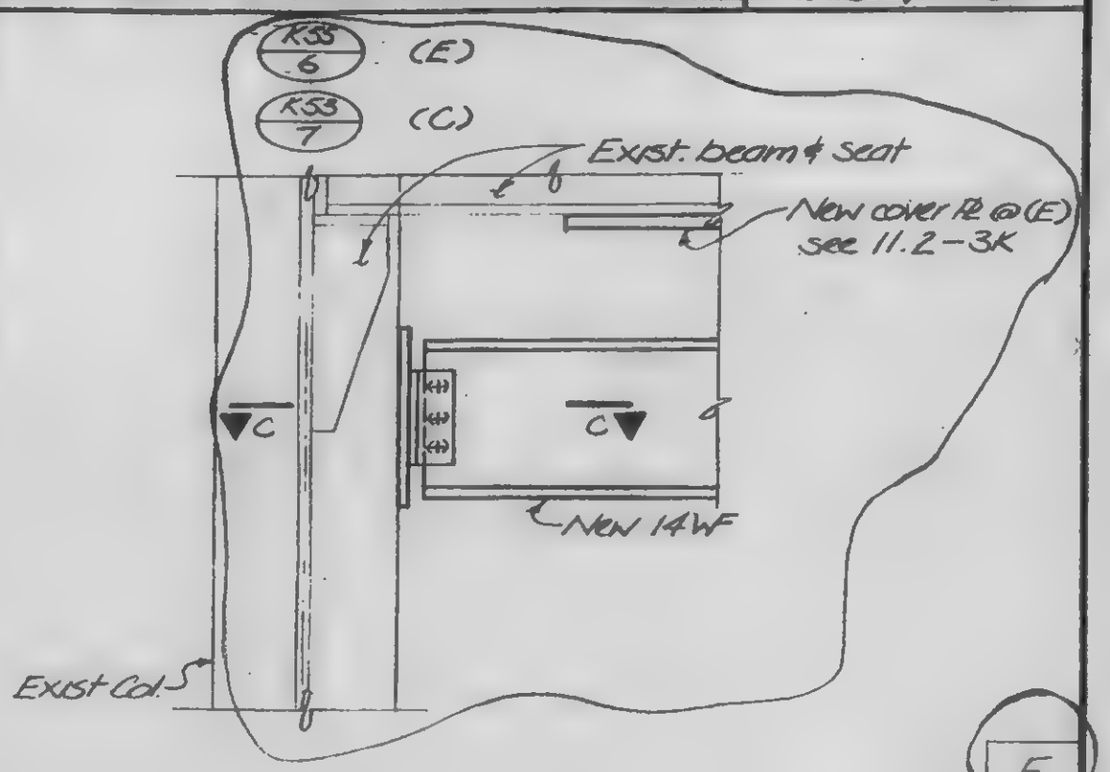

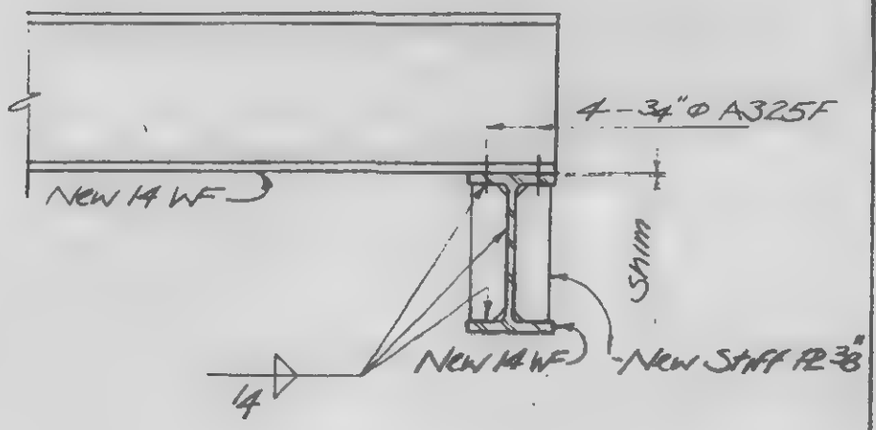

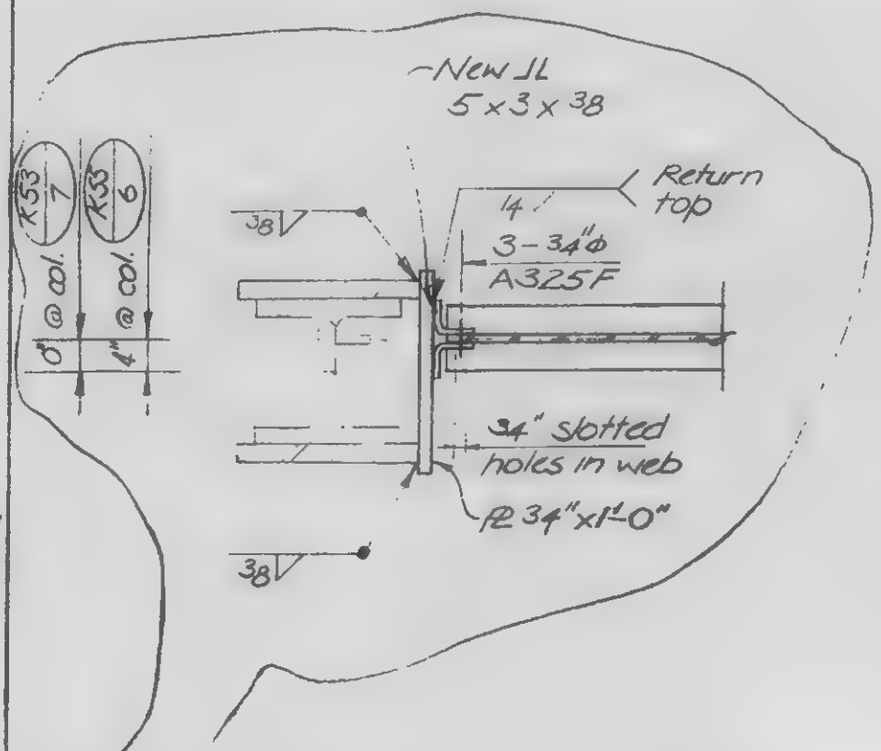

LICENSED PROFESSIONAL ENGINEER — LESLIE E ROBERTSON — No 34360 — UNIVERSITY OF THE STATE OF NEW YORK

DESIGNED

DRAWN J. Banks

REVIEWED Wolf

13-K11.4-3

SKILLING, HELLE, CHRISTIANSEN, ROBERTSON — Structural & Civil Engineers

PROJECT THE WORLD TRADE CENTER | TITLE EL 320-ZONE K5-MEZZ. LEVEL-CONN. DETAIL | DATE 5-7-78

REVISIONS

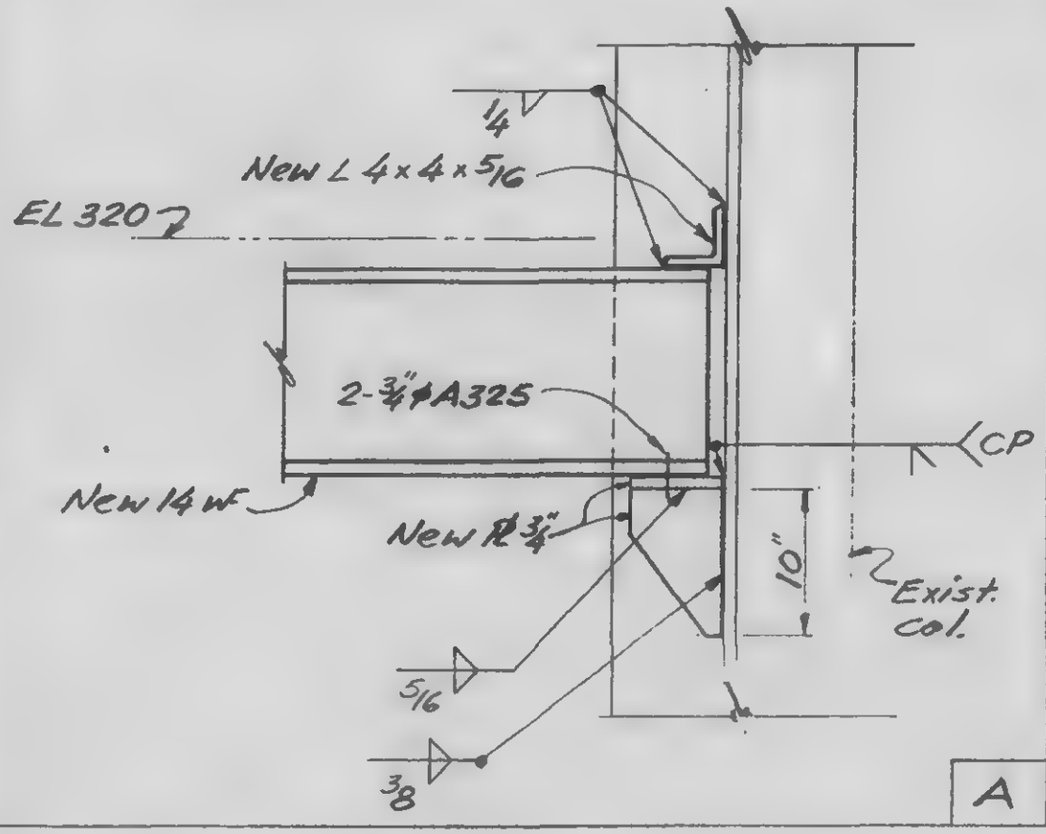

A

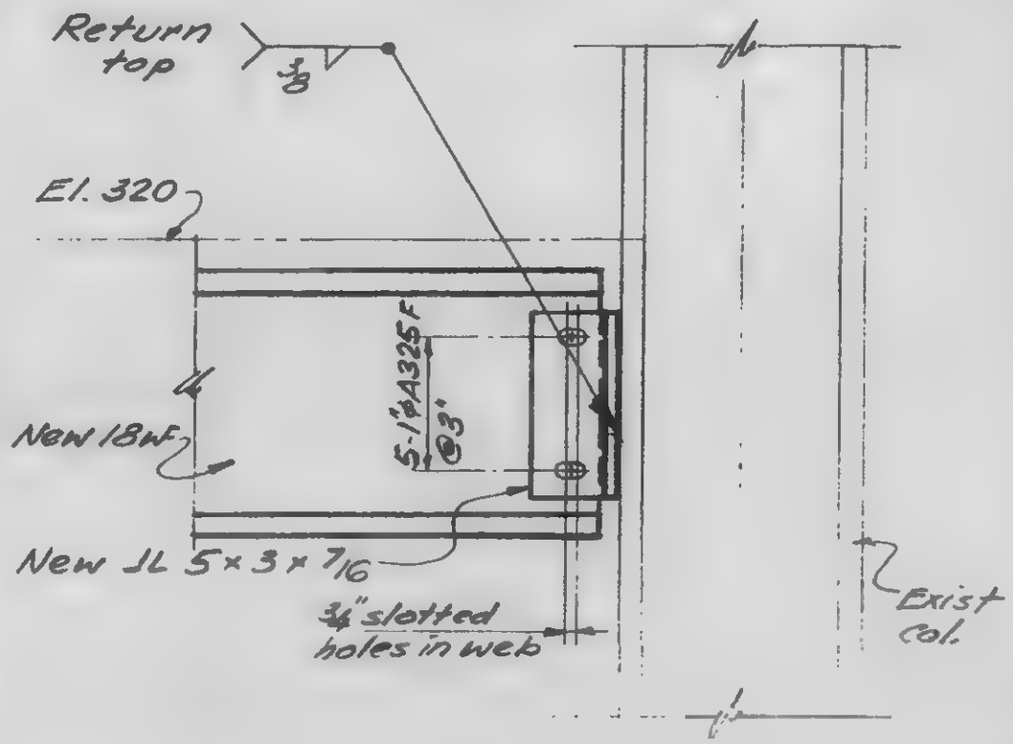

B

LICENSED PROFESSIONAL ENGINEER
LESLIE E. ROBERTSON
NO 34360
UNIVERSITY OF THE STATE OF NEW YORK

DESIGNED

DRAWN John Gonzalez

REVIEWED Walt

13-K12-1

SKILLING, HELLE, CHRISTIANSEN, ROBERTSON — Structural & Civil Engineers

PROJECT: THE WORLD TRADE CENTER | TITLE: E.I. 320-ZONE K3-HANGERS-CONN. DETAILS | DATE: 5-7-73

REVISIONS

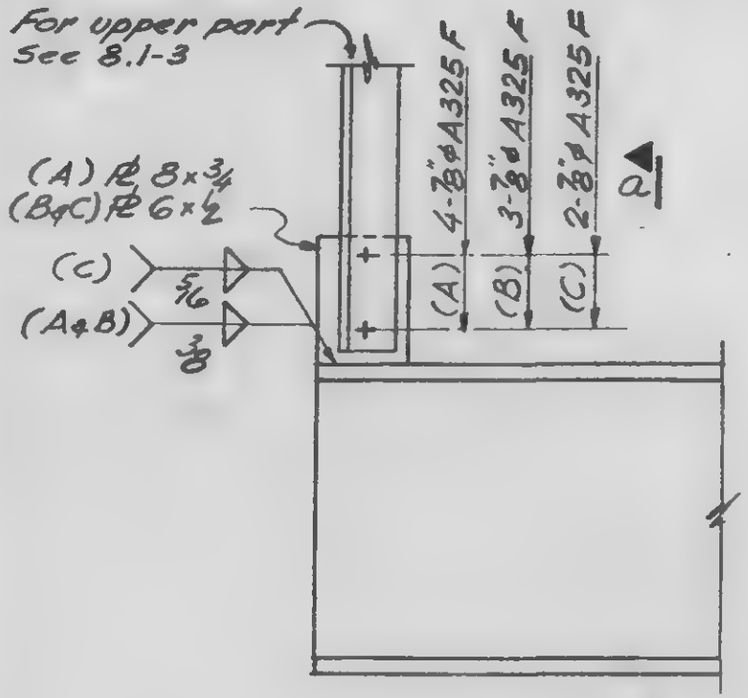

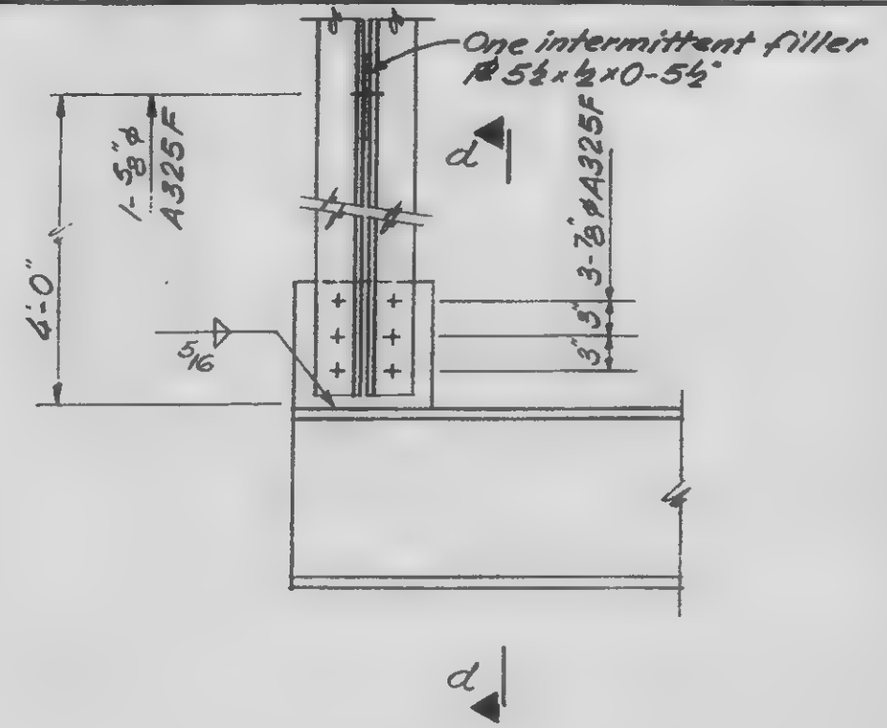

A
B
C

D

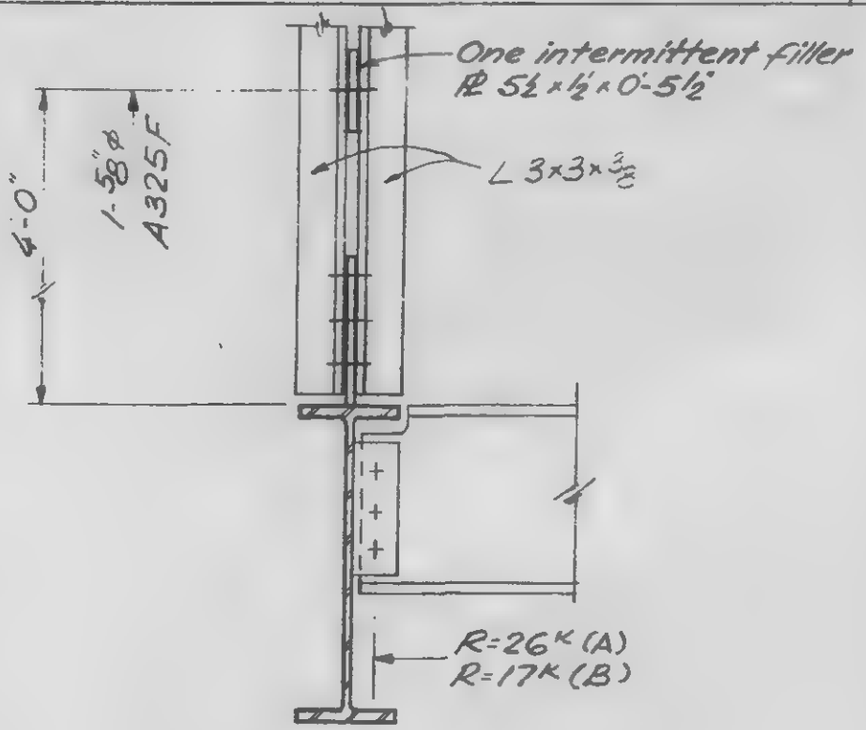

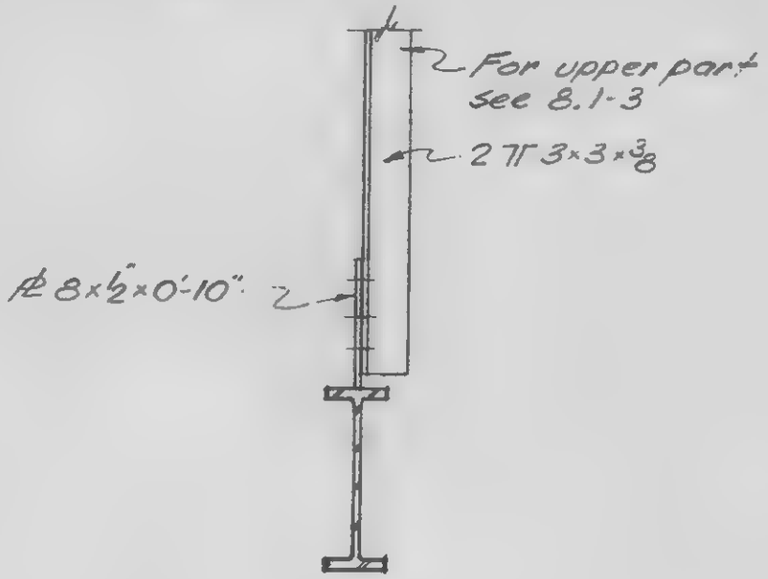

LICENSED PROFESSIONAL ENGINEER
LESLIE E. ROBERTSON
No. 34960
UNIVERSITY OF THE STATE OF NEW YORK

DESIGNED K. Chiang
DRAWN
REVIEWED

a | d

13-K12-2

SKILLING, HELLE, CHRISTIANSEN, ROBERTSON — Structural & Civil Engineers

PROJECT: THE WORLD TRADE CENTER | TITLE: SECTIONS AT AUTO LIFT - EL. 284'-0" | DATE: 1-12-73

REVISIONS

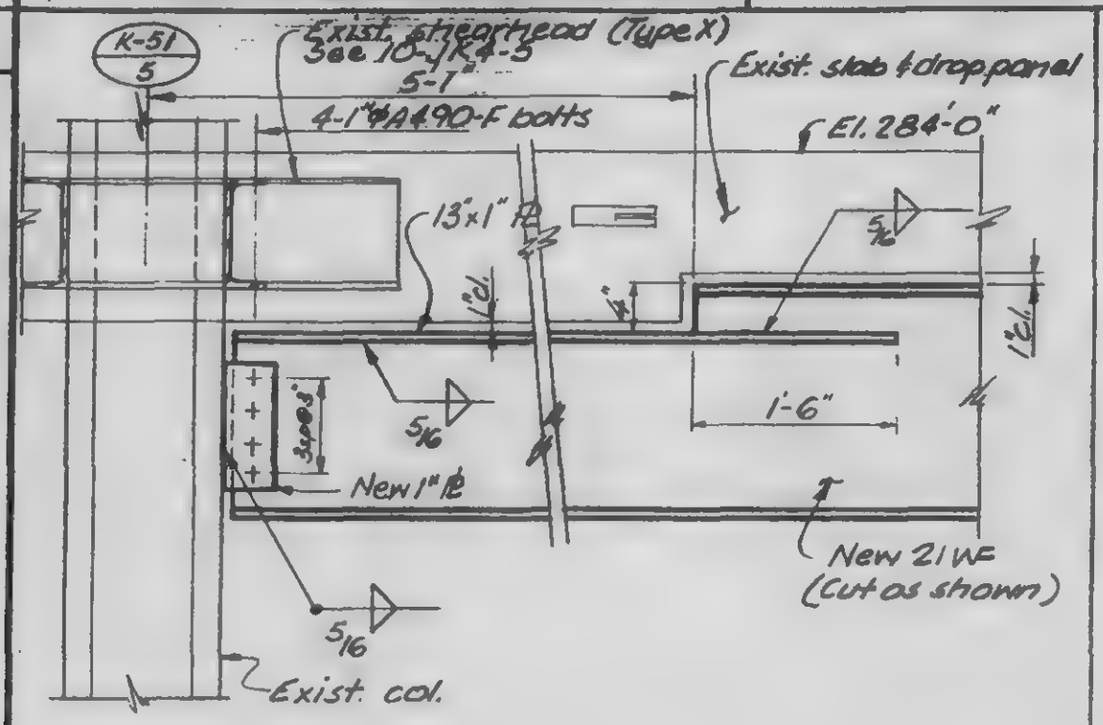

A

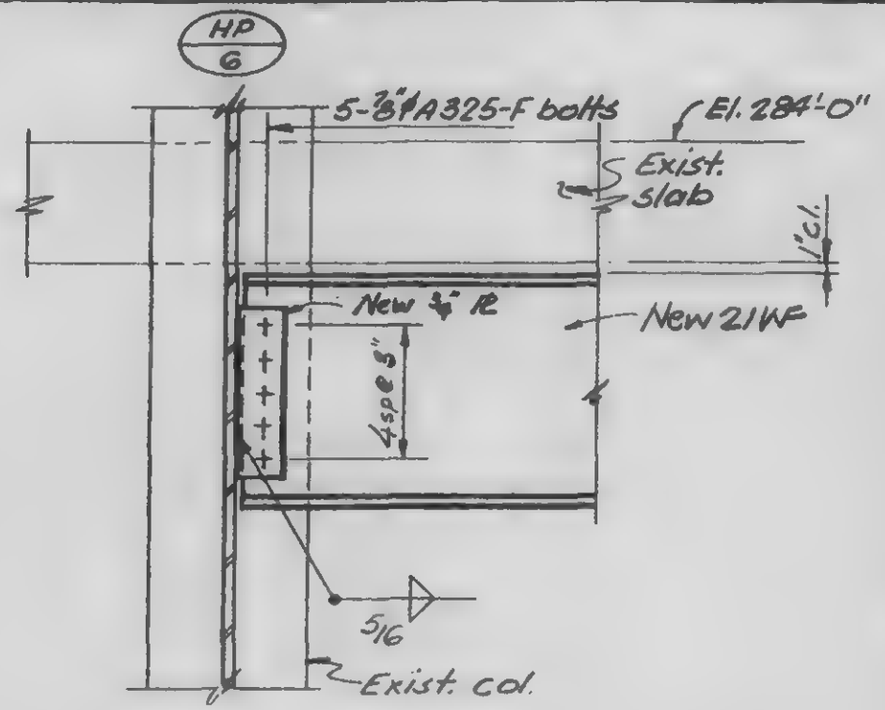

B

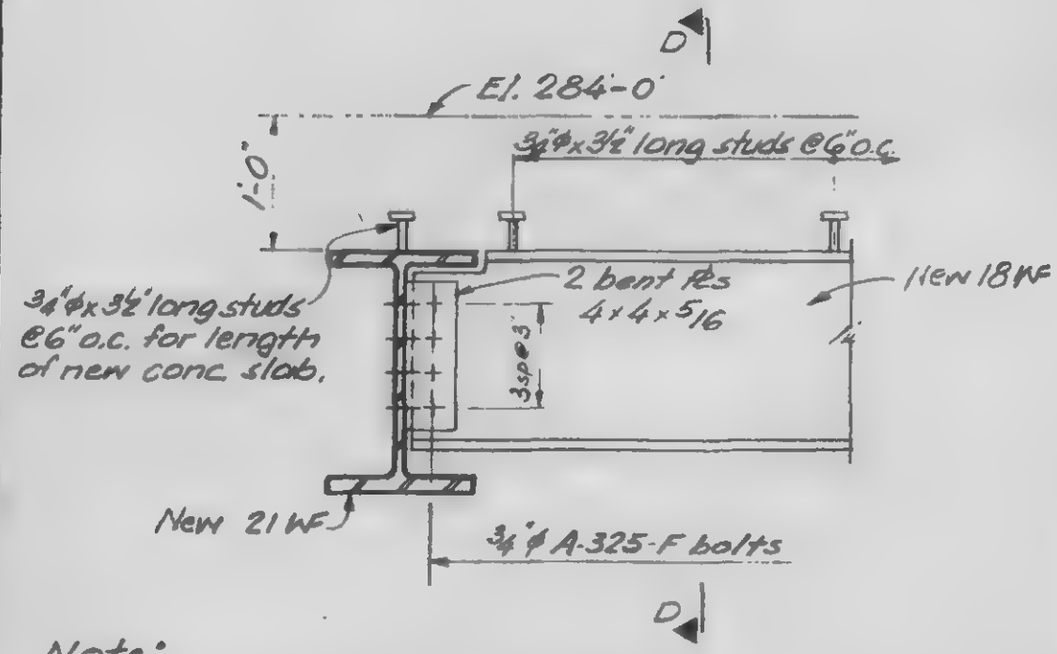

Note:
Shear studs to be omitted if steel beams are installed after conc. slab is in place.

C D

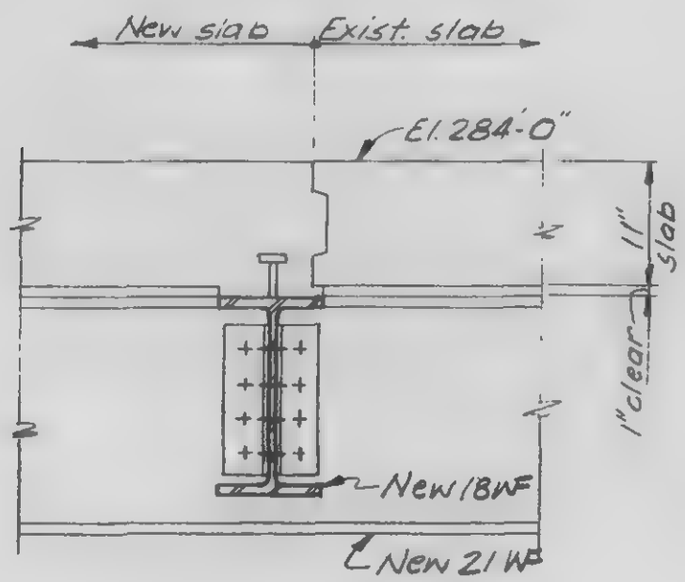

LICENSED PROFESSIONAL ENGINEER
LESLIE E. ROBERTSON
No. 34360
UNIVERSITY OF THE STATE OF NEW YORK

DESIGNED DS
DRAWN TR
REVIEWED

13-K13-1

SKILLING, HELLE, CHRISTIANSEN, ROBERTSON — Structural & Civil Engineers

PROJECT THE WORLD TRADE CENTER | TITLE SECTIONS AT AUTO LIFT - EL. 284'-0" | DATE 1-12-78

REVISIONS

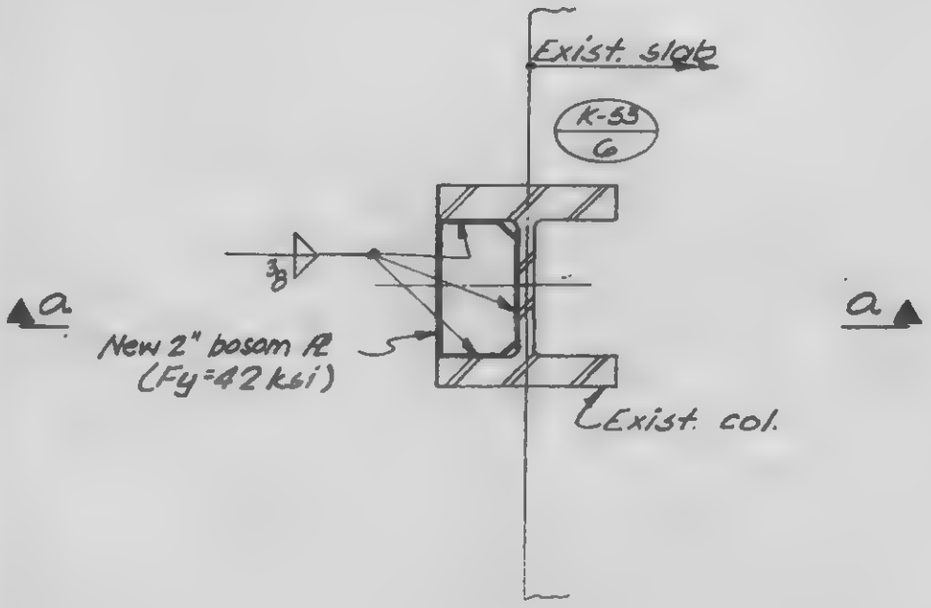

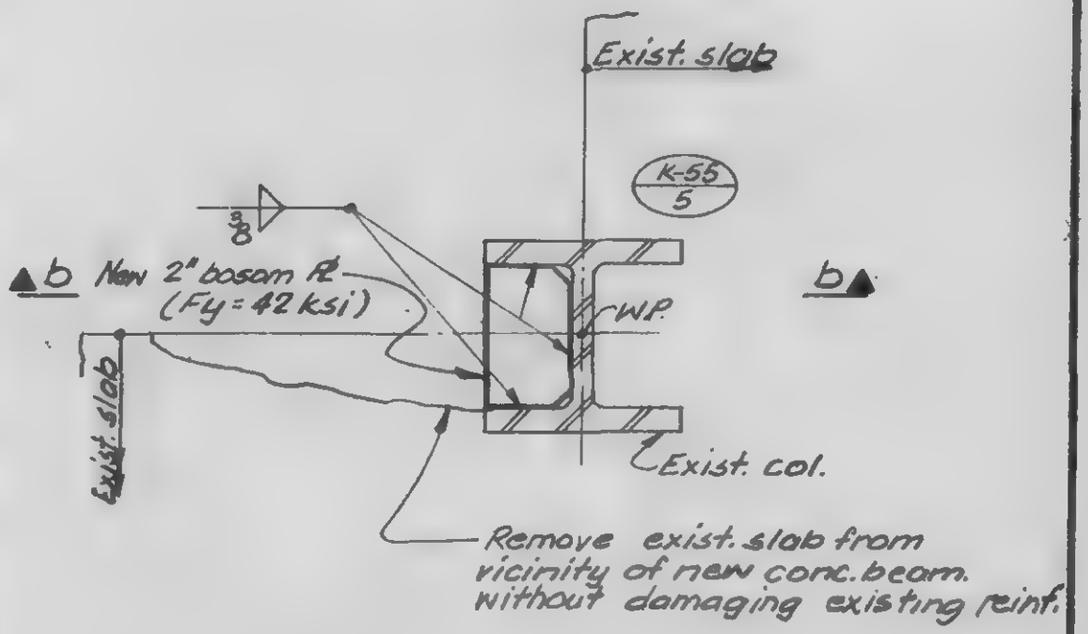

A

B

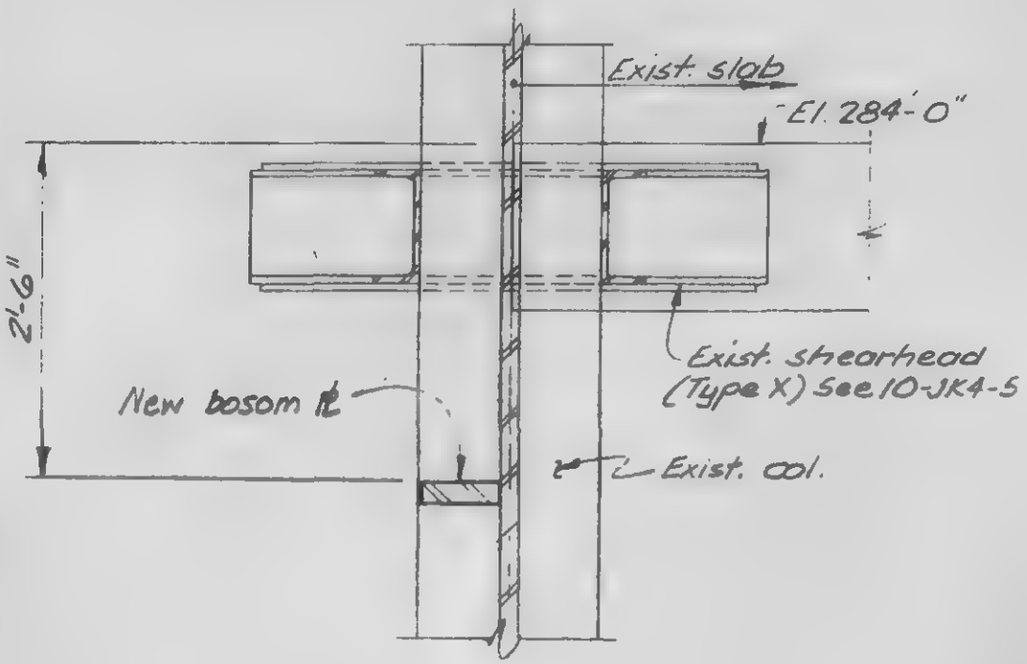

a

b

LICENSED PROFESSIONAL ENGINEER
LESLIE E. ROBERTSON
No. 34360
UNIVERSITY OF THE STATE OF NEW YORK

DESIGNED DS

DRAWN TR

REVIEWED

13-K13-2

SKILLING, HELLE, CHRISTIANSEN, ROBERTSON — Structural & Civil Engineers

PROJECT: THE WORLD TRADE CENTER | TITLE: SECTIONS AT AUTO LIFT - EL. 284'-0" | DATE: 1-12-75

REVISIONS

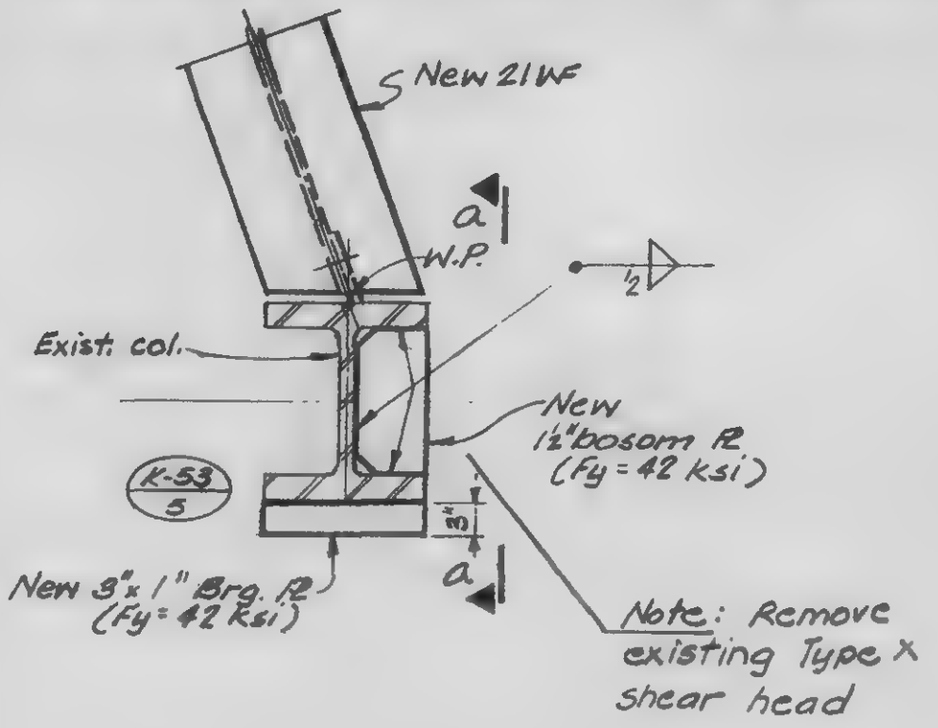

A

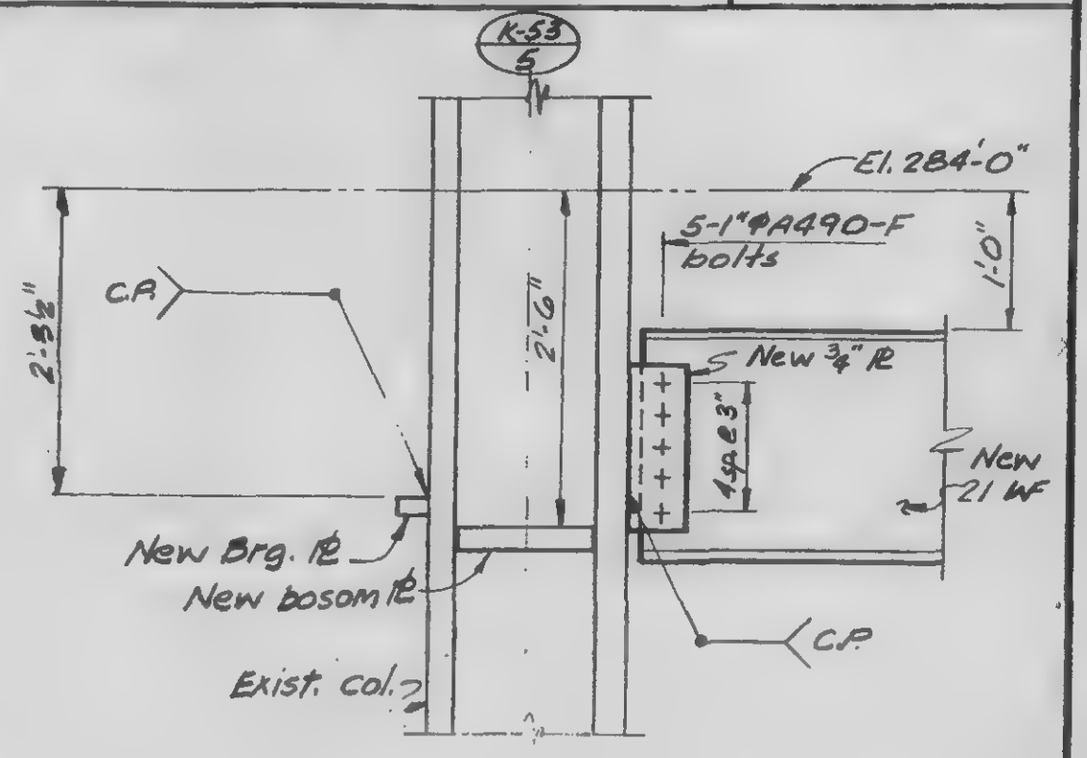

a

LICENSED PROFESSIONAL ENGINEER — LESLIE E. ROBERTSON — No. 34360 — UNIVERSITY OF THE STATE OF NEW YORK

DESIGNED D.S.

DRAWN R.

REVIEWED

13-K13-3

SKIDMORE, OWINGS & MERRILL

PROJECT WORLD TRADE CENTER — NEW YORK

TITLE SECTIONS AT AUTO. LIFT — EL. 284'-0"

DATE 1-12-73

REVISIONS

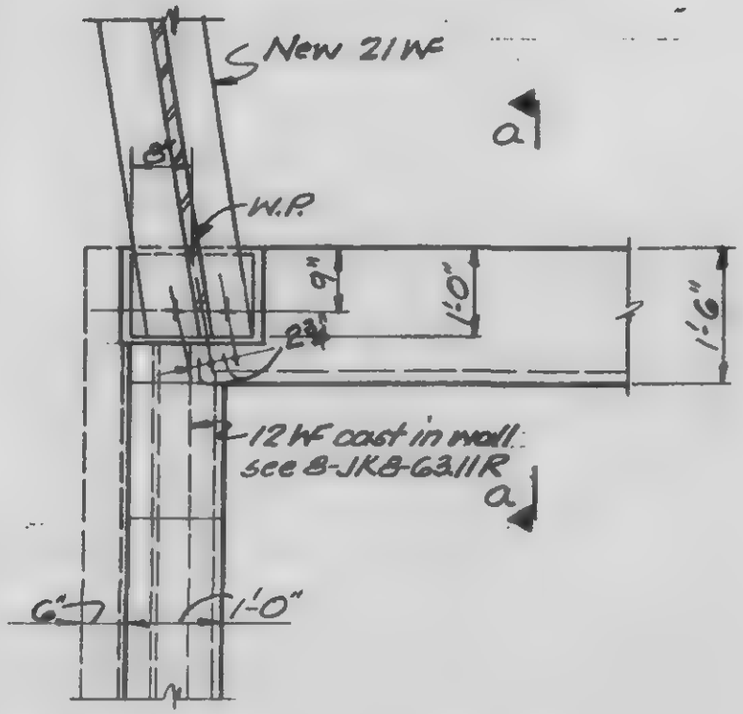

A

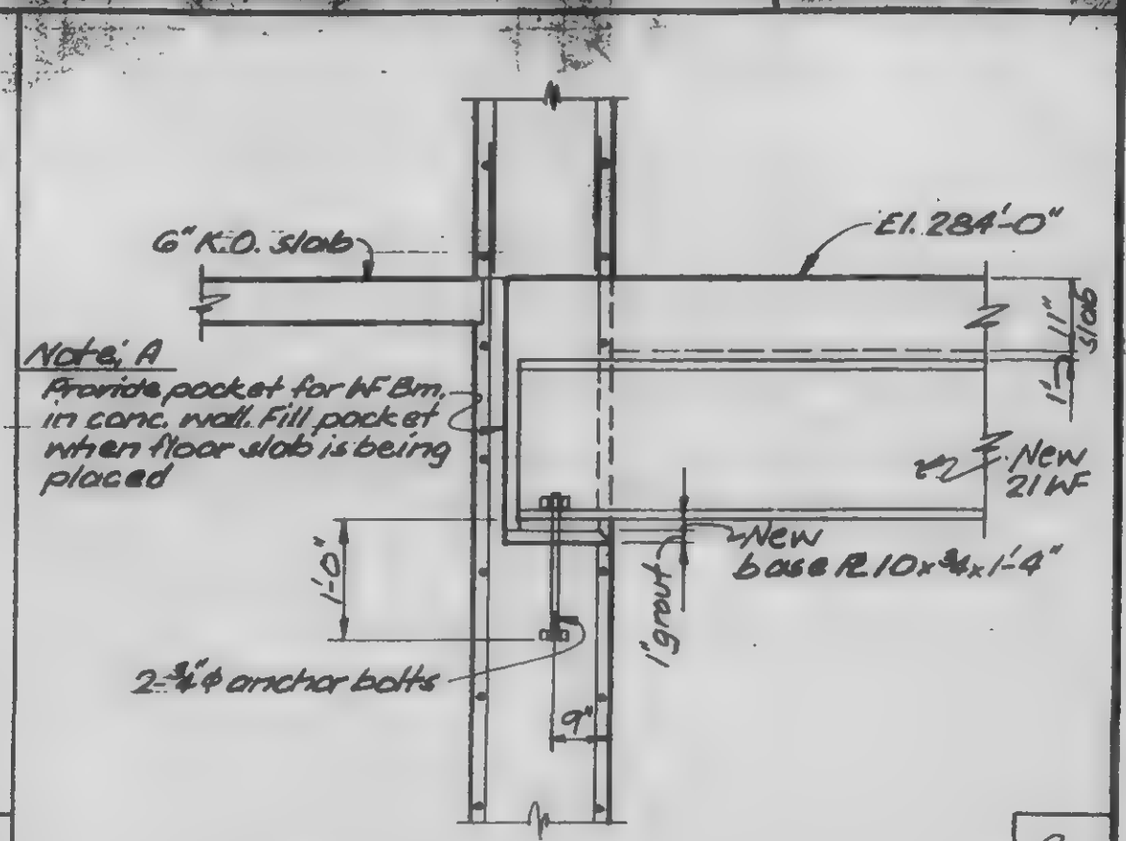

a

LICENSED PROFESSIONAL ENGINEER
LESLIE E. ROBERTSON
No. 34360
UNIVERSITY OF THE STATE OF NEW YORK

SIGNED DS

DRAWN TR

REVIEWED

13-K13-4

REVISIONS
Δ2-1-79
Printed
D-19
Seal
1/7/79

SKILLING, HELLE, CHRISTIANSEN, ROBERTSON
CONSULTING STRUCTURAL AND CIVIL ENGINEERS

DRAWING NO. 13-K19 1.1

PROJECT WTC-1978 HOTEL-SUPPORT REV. | PROJECT NO. 701.283 | BY CWB

DATE 1-3-79

CONTENTS 13-K19

13-K19-1	CONTENTS
13-K19-2	NOTES
13-K19-3	KEY PLANS
13-K19-4	BASE PLATE REINFORCING
13-K19-5	COLUMN REINFORCING
13-K19-6	WEB REINFORCING
13-K19-7	REINFORCING DETAILS LINE 43
13-K19-8	FLANGE REINFORCING
13-K19-9	REINFORCING DETAILS LINE 47
13-K19-10	[illegible]
13-K19-11	REINFORCING DETAILS
13-K19-12	REINFORCING DETAILS
13-K19-13	REINFORCING DETAILS
13-K19-14	HORIZONTAL ANCHOR COL. HS-1
13-K19-15	TRANSFORMER AREA
13-K19-16	EL. 294 REFRIG. MACHINE SUPPORT
13-K19-17	REINFORCING AT NEW OPENINGS EL. 332
13-K19-18	NEW ELEVATOR SUPPORTS EL. 294-310
13-K19-19	HORIZONTAL ANCHOR COL. HP-1
13-K19-20	ELEVATOR BUFFER BEAMS

The Professional Seal and signature affixed hereon is all inclusive for the full content of this document.

REVISIONS 3-20-79

SKILLING, HELLE, CHRISTIANSEN, ROBERTSON
CONSULTING STRUCTURAL AND CIVIL ENGINEERS

DRAWING NO. 13-K19 1.2

PROJECT WTC-1978 HOTEL - SUPPORT REV. | PROJECT NO. 781.203 | BY WAB

DATE PAGE 13-K19

DATE 3/12/79

13-K19-1.1	9/7/79
13-K19-1.2	9/7/79
13-K19-2	2/1/79
13-K19-3.1	3/12/79
13-K19-3.2	3/12/79
13-K19-3.3	3/12/79
13-K19-3.4	2/1/79
13-K19-4	2/1/79
13-K19-5.1	3/12/79
13-K19-5.2	2/1/79
13-K19-5.3	3/12/79
13-K19-5.4	3/12/79
13-K19-5.5	3/12/79
13-K19-6	2/1/79
13-K19-7.1	2/1/79
13-K19-7.2	3/20/79
13-K19-7.3	2/1/79
13-K19-8	2/1/79
13-K19-9.1	3/12/79
13-K19-9.2	2/1/79
13-K19-9.3	2/1/79
13-K19-9.4	2/1/79
13-K19-10	2/1/79
13-K19-11.1	3/20/79
13-K19-11.2	3/20/79
13-K19-12	2/1/79
13-K19-13	3/12/79
13-K19-14	3/12/79
13-K19-15.1	9/7/79
13-K19-15.2	9/7/79
13-K19-15.3	9/7/79
13-K19-15.4	9/7/79
13-K19-15.5	9/7/79
13-K19-15.6	9/7/79
13-K19-15.7	9/7/79
13-K19-15.8	9/7/79
13-K19-16	5/1/79
13-K19-17	3/12/79
13-K19-17 ALT.	4/6/79
13-K19-18.1	4/6/79
13-K19-18.2	4/6/69
13-K19-19	9/7/79
13-K19-20.1	5/31/79
13-K19-20.2	5/31/79
13-K19-20.3	5/31/79
13-K19-20.4	5/31/79
13-K19-20.5	5/31/79

REVISIONS	SKILLING, HELLE, CHRISTIANSEN, ROBERTSON	DRAWING NO
Δ2-1-79	CONSULTING STRUCTURAL AND CIVIL ENGINEERS	13-K19 2
	PROJECT WTC-1978 HOTEL · SUPPORT REV. / PROJECT NO 701.283 / BY WAB	
		DATE 1-3-79

Codes

1. Building Code for the City of New York.
2. AISC "Specification for the Design, Fabrication, and Erection of Structural Steel for Buildings".
3. Structural Welding Code AWS D1.1-Rev. 2-77.
4. ACI 318-77 "American Concrete Institute Standard Building Code Requirements for Reinforced Concrete".

Specifications

See "World Trade Center Hotel - 05120-1-, Structural Steel 6/2/78" except as modified in these Notes and drawings.

Site

1. Dimensions shown in the Drawings are correct to the best of the knowledge of the Port Authority of New York, World Trade Center Planning and Construction hereafter referred to as the Engineer. However, the Contractor shall verify all dimensions by field measurements prior to installing any material. For material fabricated to fit within restricted dimensions, field dimensions shall be verified prior to fabrication and shall be shown in the shop detail drawings.
2. Shop Drawings shall be submitted to the Engineer prior to fabrication of any material.

Structural Steel

1. All steel shall be ASTM A 36 or another weldable steel included in paragraph 1.4.1.1 of the AISC Specifications and selected to provide the yield point required in the drawings.
2. All bolted connections shall be made with bolts as noted in the drawings.
3. Reinforcing is to be provided where field cuts have reduced the shear or moment capacity below the capacity before field cuts were made.
4. Electrodes, flux and shielding gas shall conform to AWS A5.1-69, AWS A5.17-69 or AWS A5.20-69 as applicable and shall provide physical properties after welding equivalent to or better than E7018 low-hydrogen electrodes. Drying or redrying of low hydrogen electrodes shall be performed at a temperature between 700 and 800 degrees Fahrenheit for not less than one hour
5. All welds shall be subject to inspection by the Engineer to the extent deemed necessary by the Engineer. Conformance to AWS D1.1 of all full penetration welds (CP) shall be verified by UT. Partial penetration welds shall be UT where shown in the drawings and as deemed necessary by the Engineer.

Reinforced Concrete

1. Concrete shall be f'c = 4,000 psi made with normal weight aggregate.
2. Concrete which is to be adjacent to existing concrete shall have mixes designed and proportioned to produce minimum practicable shrinkage.
3. Where concrete is to be cast against existing concrete, the existing concrete shall be cleaned and completely coated with an approved epoxy bonding agent prior to casting new concrete.
4. All reinforcing steel shall be deformed bars conforming to ASTM A 615, Grade 60 unless otherwise noted in the Drawings.

REVISIONS	SKILLING, HELLE, CHRISTIANSEN, ROBERTSON CONSULTING STRUCTURAL AND CIVIL ENGINEERS			DRAWING NO 13-K19 3.1
Δ 2-1-79	PROJECT WTC-1978 HOTEL-SUPPORT REV.	PROJECT NO. 701-283	BY WAB	
Δ 2 -6-79	KEY PLAN ZONE K-1			DATE 1-3-79

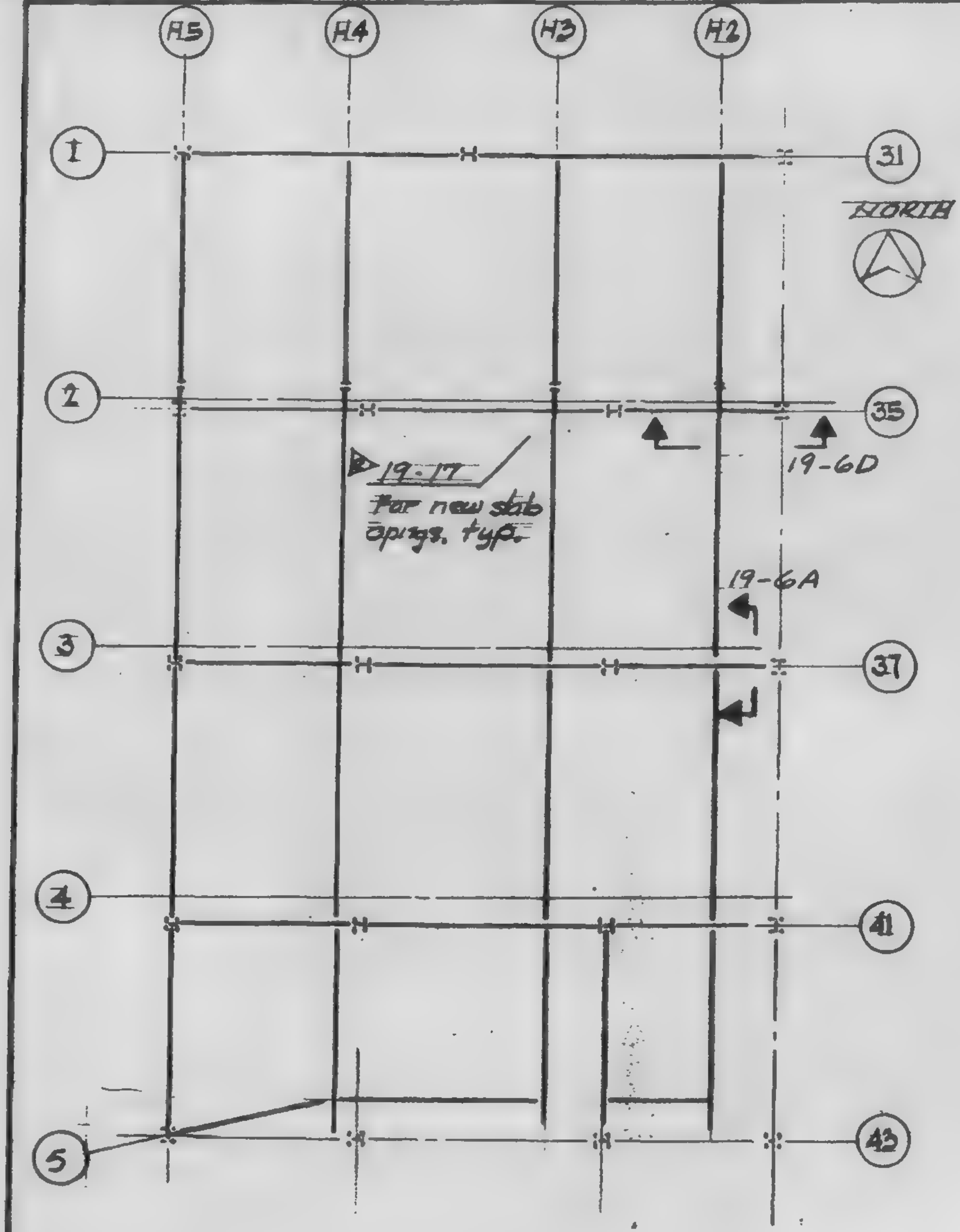

REVISIONS	SKILLING, HELLE, CHRISTIANSEN, ROBERTSON	DRAWING NO
1 2-1-79	CONSULTING STRUCTURAL AND CIVIL ENGINEERS	13-K19
2 3-12-79	PROJECT WTC-1978 HOTEL-SUPPORT REV. / PROJECT NO 701-283 / BY WAB	3.2
	KEY PLAN ZONE K-3	DATE 1-3-79

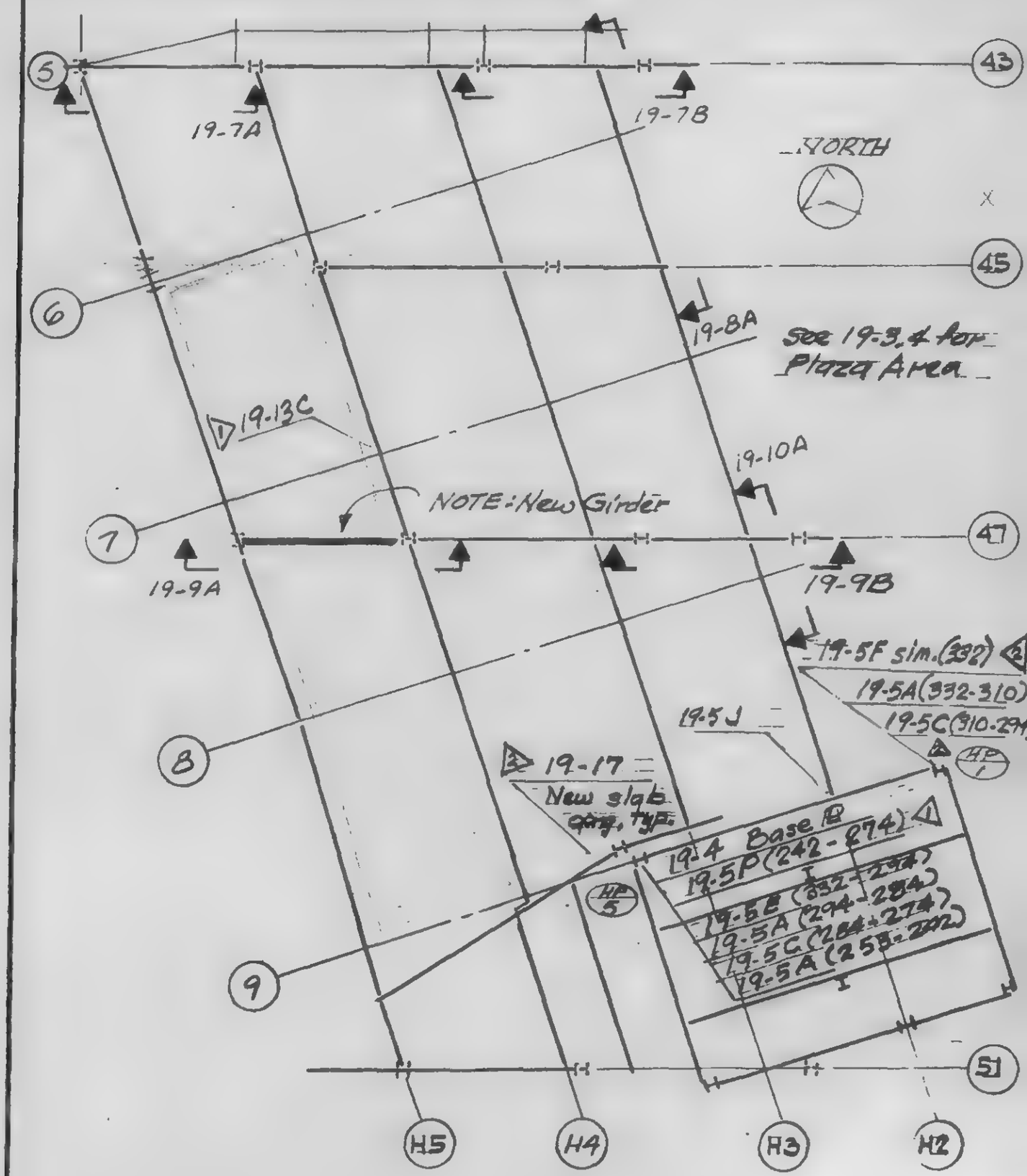

REVISIONS	SKILLING, HELLE, CHRISTIANSEN, ROBERTSON CONSULTING STRUCTURAL AND CIVIL ENGINEERS			DRAWING NO
2-1-79 Printed 79	PROJECT WTC - 1978 HOTEL - SUPPORT REV.	PROJECT NO 701-283	BY CWB	13-K19 3.3
	KEY PLAN ZONE K-3			DATE 1-3-79

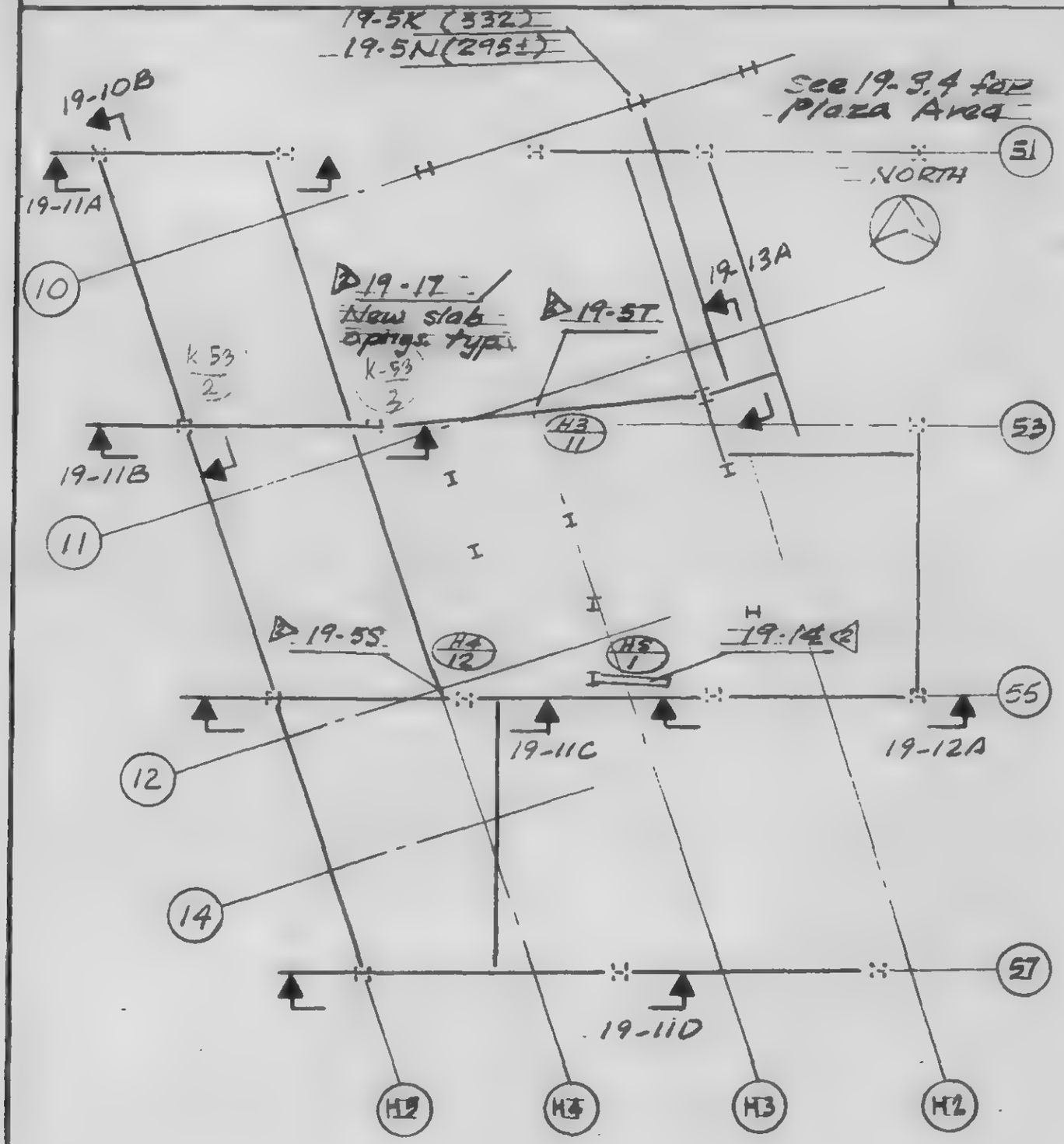

REVISIONS
2-1-79

SKILLING, HELLE, CHRISTIANSEN, ROBERTSON
CONSULTING STRUCTURAL AND CIVIL ENGINEERS

DRAWING NO 13-K19 3.4

PROJECT WTC-1978 HOTEL SUPPORT REV. | PROJECT NO 701.283 | BY WAB

DATE 1-3-79

KEY PLAN PLAZA AREA

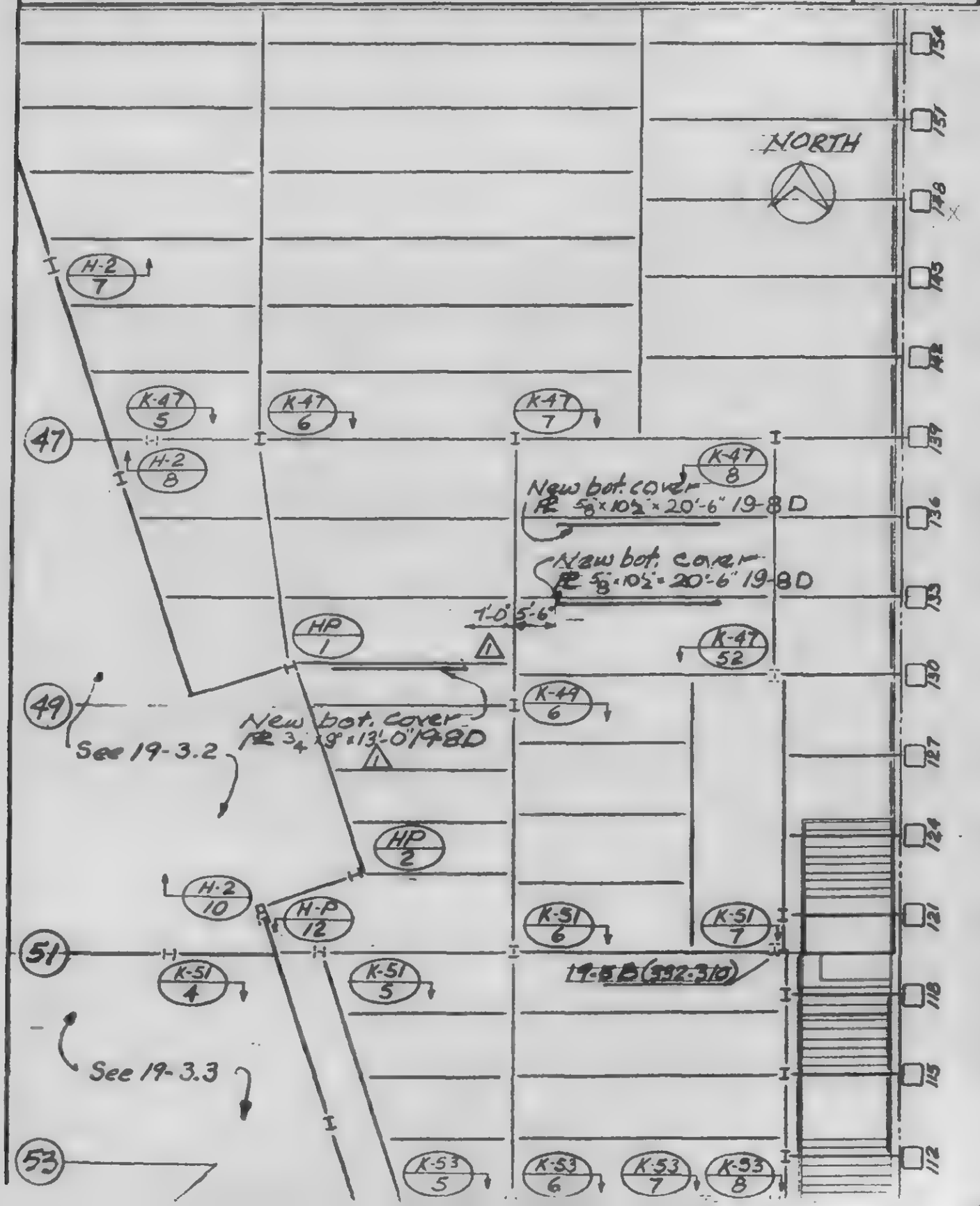

REVISIONS	SKILLING, HELLE, CHRISTIANSEN, ROBERTSON CONSULTING STRUCTURAL AND CIVIL ENGINEERS			DRAWING NO
2-1-79	PROJECT WTC-1978 HOTEL-SUPPORT REV.	PROJECT NO 701.283	BY WAR	13-K19 4
	BASE PL REINFORCING			DATE 1-3-79

Plan Col. HP/5

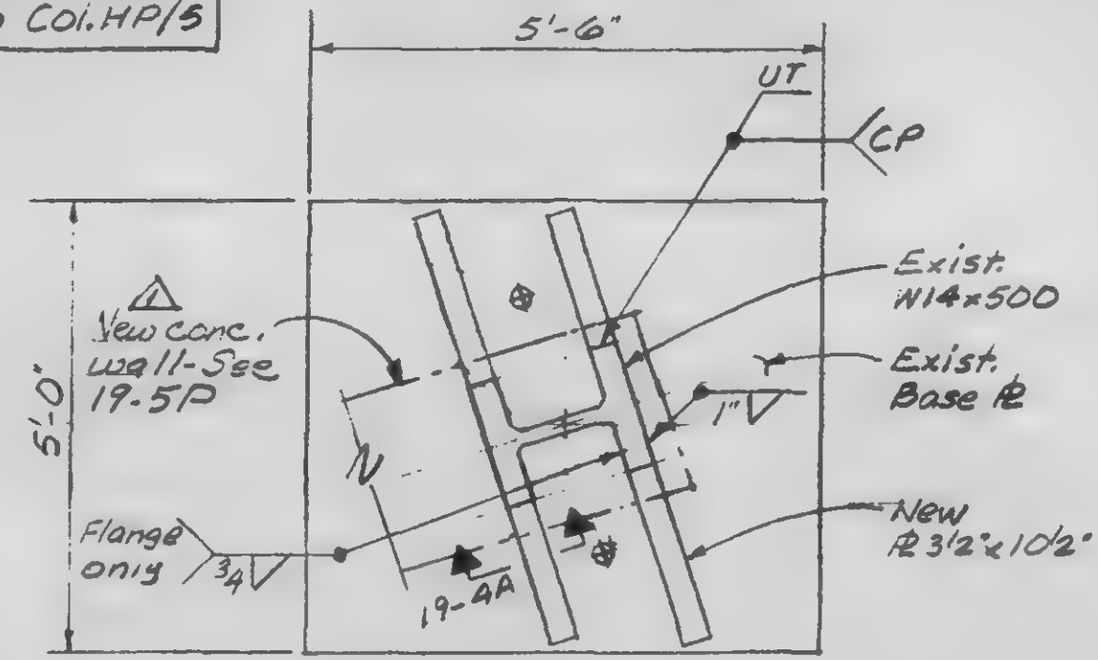

A

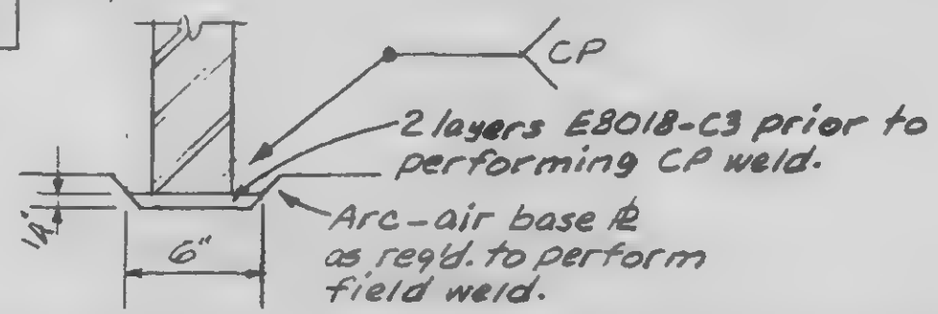

Note: For stiffener to base plate, welding procedure shall include the following:

1. UT Base PL 4 locations 100% before welding.
2. Preheat (soak) 250°F minimum preheat.
3. E7018 manual or E70T-1 semiautomatic welding.
4. Cover heated areas with asbestos blankets and slow cool.
5. UT welds after cooling.

REVISIONS
2-1-79
-nited
)3 79

SKILLING, HELLE, CHRISTIANSEN, ROBERTSON
CONSULTING STRUCTURAL AND CIVIL ENGINEERS

PROJECT NTC-1918 HOTEL-SUPPORT REV. | PROJECT NO. 701.283 | BY WDB

DRAWING NO 13-K19 5.1

DATE 1-3-79

COLUMN REINFORCING

A

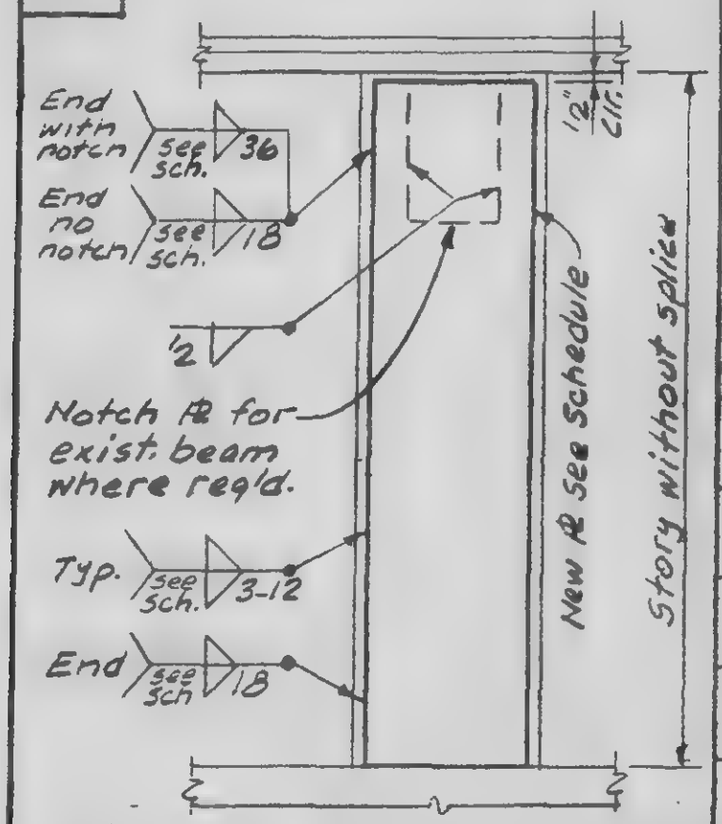

SCHEDULE

Col. No / Level	HP 5	HP 1	K51 7
332 to 310	See 19-5E	℄ 12 x 14 1/2 — 3/8 — 19-5A	℄ 14 x 12 — 5/16 — 9-5B
310 to 294	See 19-5E	℄ 12 x 14 1/2 — 5/8 — 9-5C	
294 to 284	℄ 1 x 18 — 3/8 — 19-5A		
284 to 274	℄ 1 x 18 — 3/8 — 19-5C		
274 to 264			
264 to 253			
253 to 242	℄ 1 x 18 — 3/8 — 19-5A		

B

C

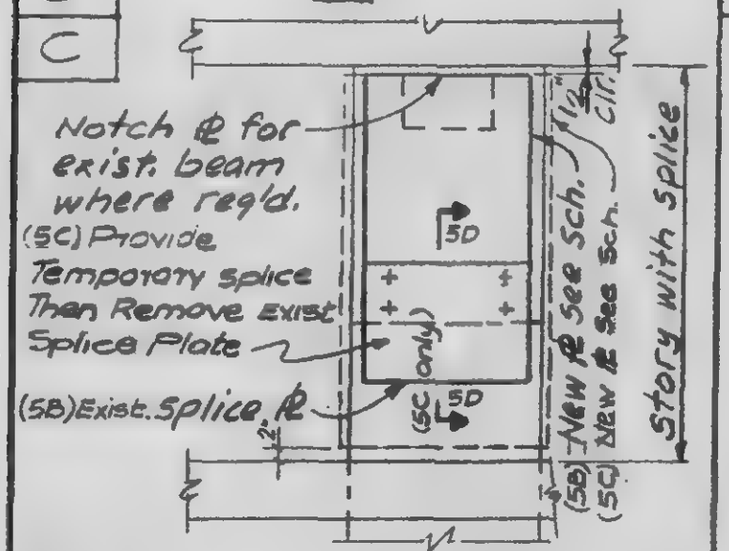

D

TYPICAL COLUMN SECTION

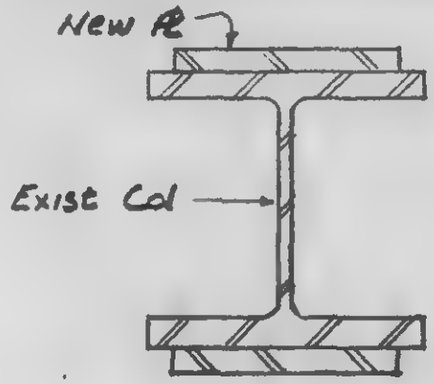

Notes:

1. All new cover plates to be Fy=36 except 5/8" Fy = 50 Ksi.
2. Field measurement is required to establish the length of all new cover plates.

HELLE CHRISTIANSEN ROBERTSON Structural & Civil Engineers	PROJECT WIC-MOIOL	DATE 10/16/79	Sheet No.
	ALT. COL 51/7	PREPARED BY [illegible]	13-K19 5.1 B
		APPROVED	

See Sch. 13-K19-5.1 for welding

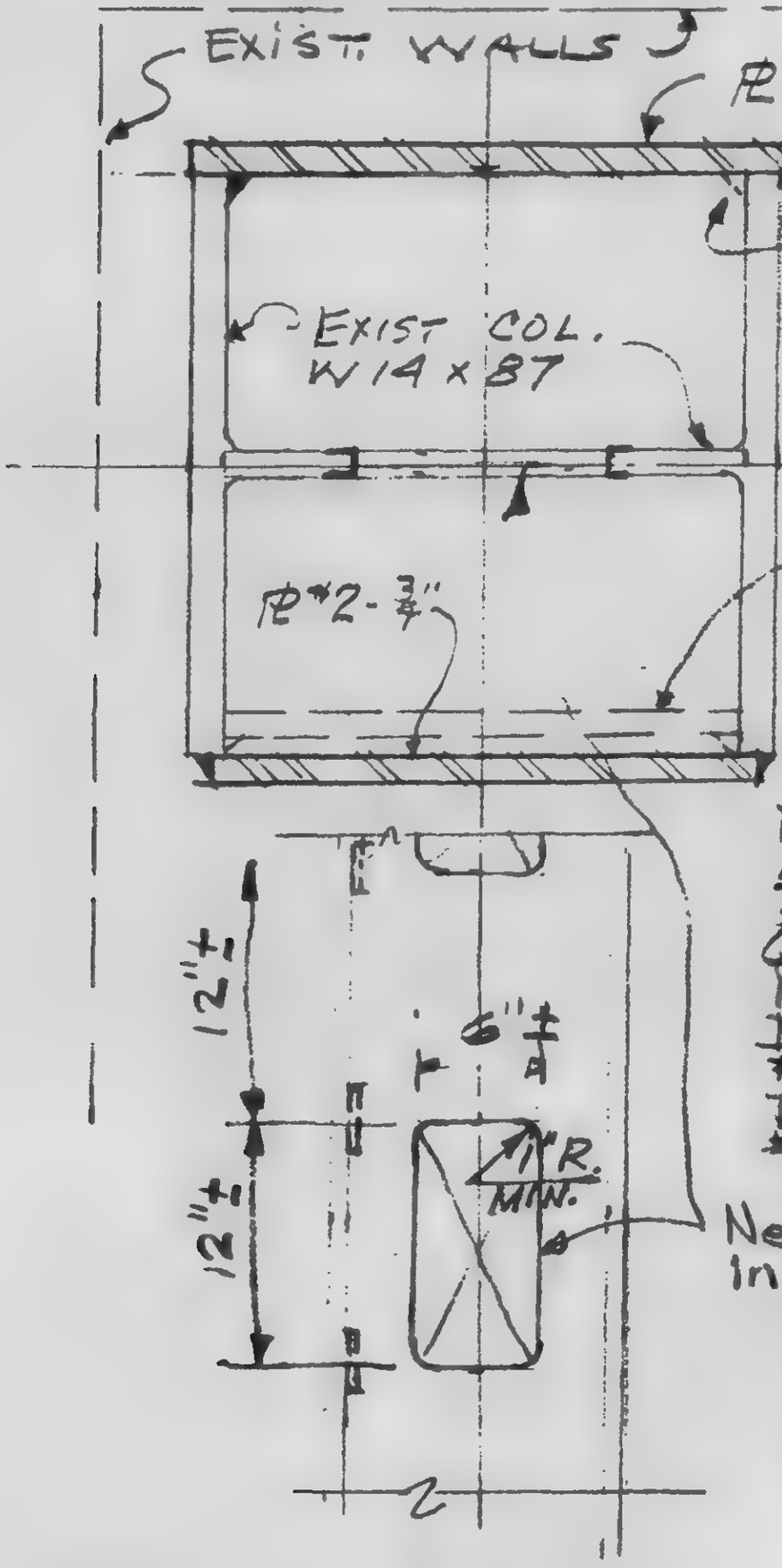

REVISIONS
△ 2-1-79

SKILLING, HELLE, CHRISTIANSEN, ROBERTSON
CONSULTING STRUCTURAL AND CIVIL ENGINEERS

DRAWING NO 13-K.9 S.2

PROJECT WTC-1978 HOTEL - SUPPORT REV. | PROJECT NO 701.283 | BY JC | DATE 1-3-79

COLUMN REINFORCING

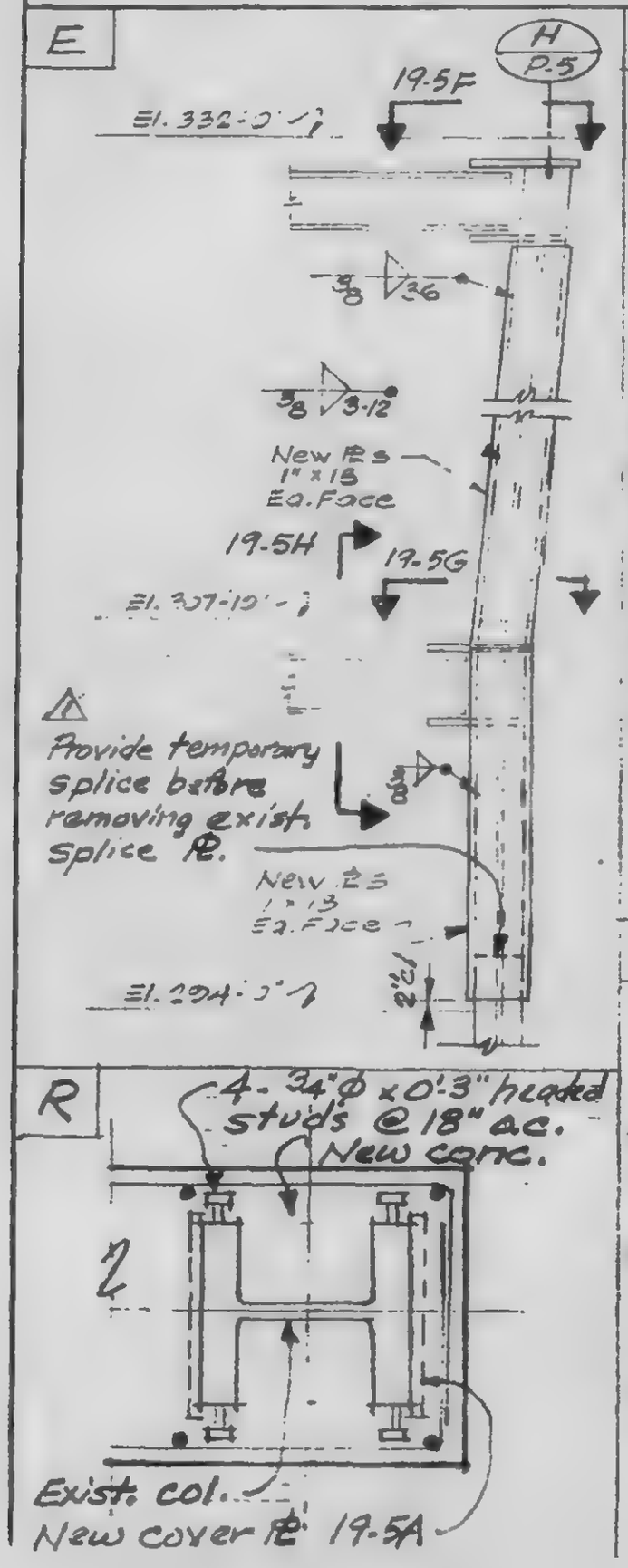

REVISIONS
△2-1-79
△3-12-79

SKILLING, HELLE, CHRISTIANSEN, ROBERTSON
CONSULTING STRUCTURAL AND CIVIL ENGINEERS

DRAWING NO. 12-K-1 5.3

PROJECT WTC-1973 HOTEL - SUPPORT REV. | PROJECT NO. 701.233 | BY WAB

DATE 1-3-79

COLUMN REINFORCING

F

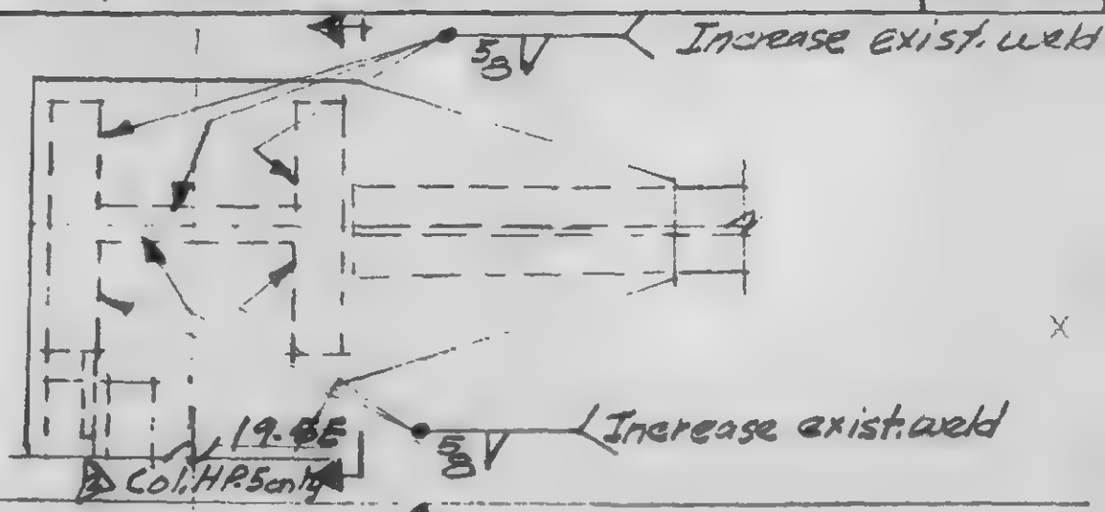

G

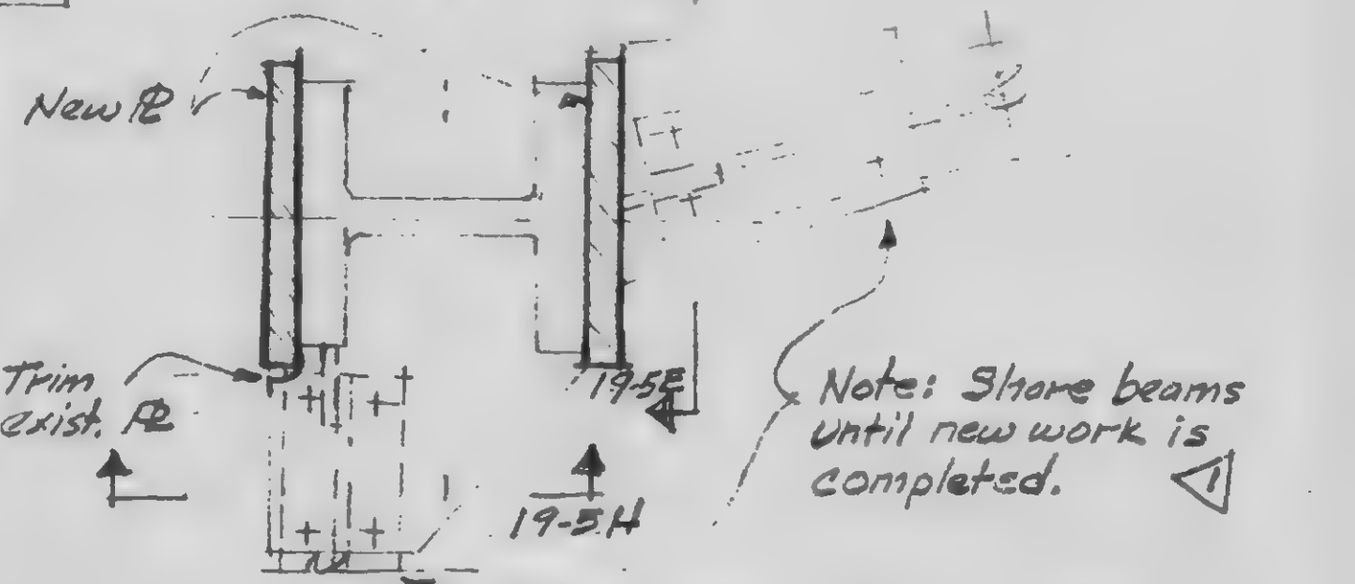

H

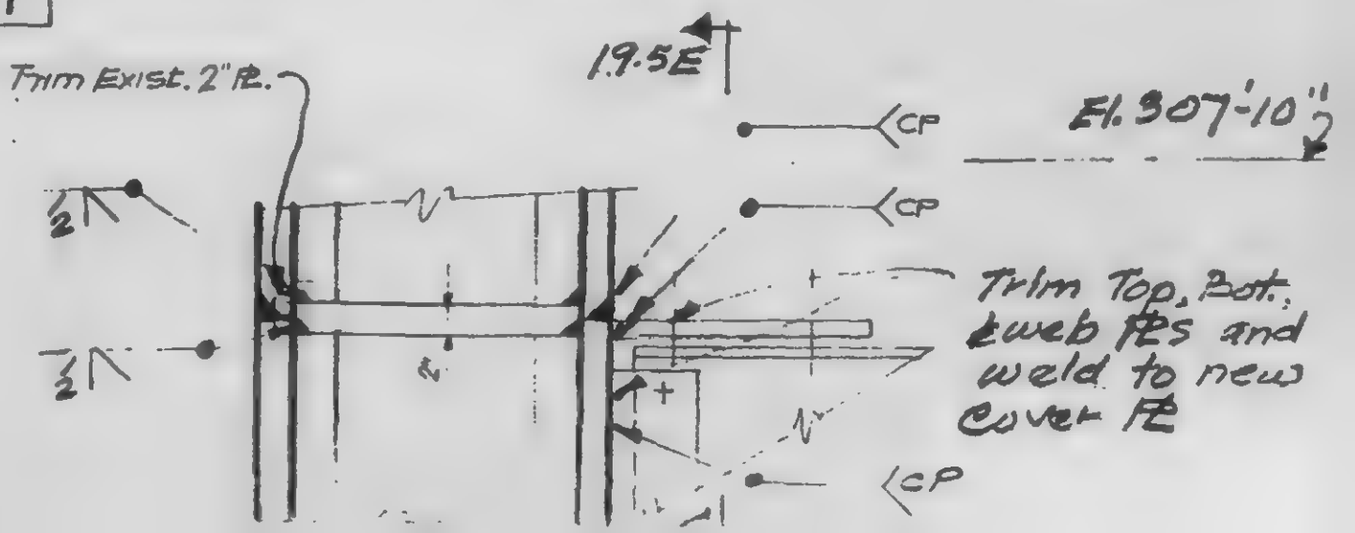

REVISIONS
2-1-79
Printed
3-9-79

SKILLING, HELLE, CHRISTIANSEN, ROBERTSON
CONSULTING STRUCTURAL AND CIVIL ENGINEERS

DRAWING NO. 13-K.3 5.4

PROJECT WTC-1978 HOTEL-SUPPORT REV | PROJECT NO. 701.283 | BY Q.16

DATE 1-3-79

COLUMN REINFORCING

J

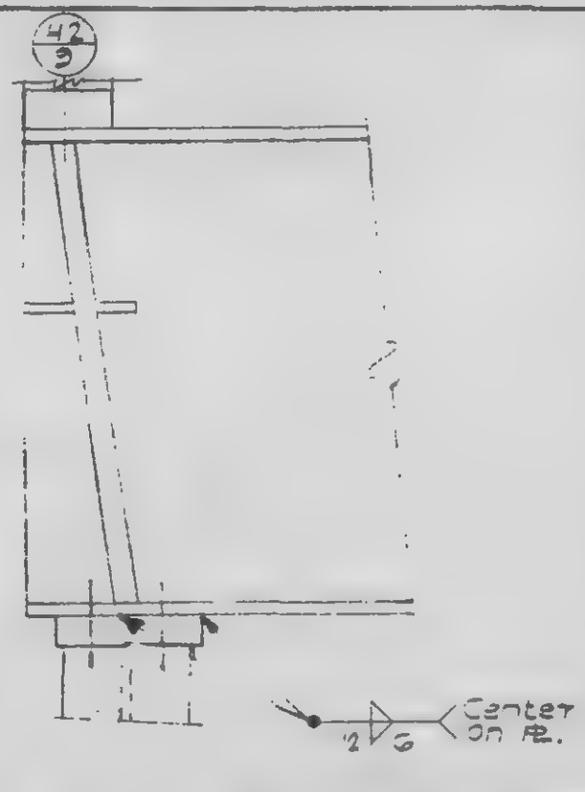

m

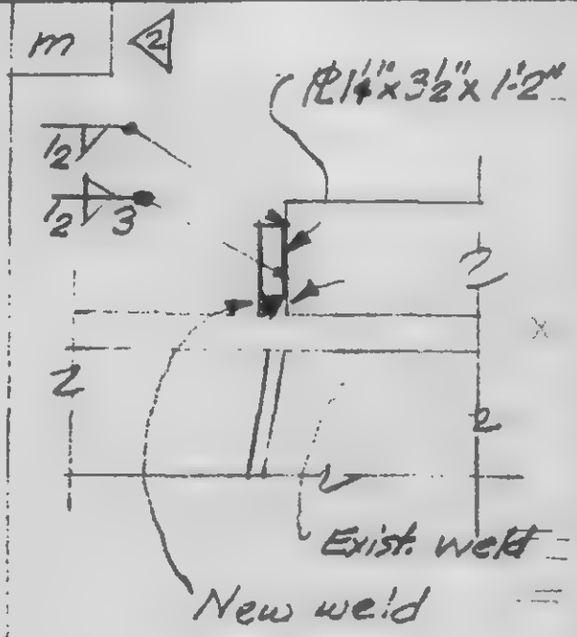

K

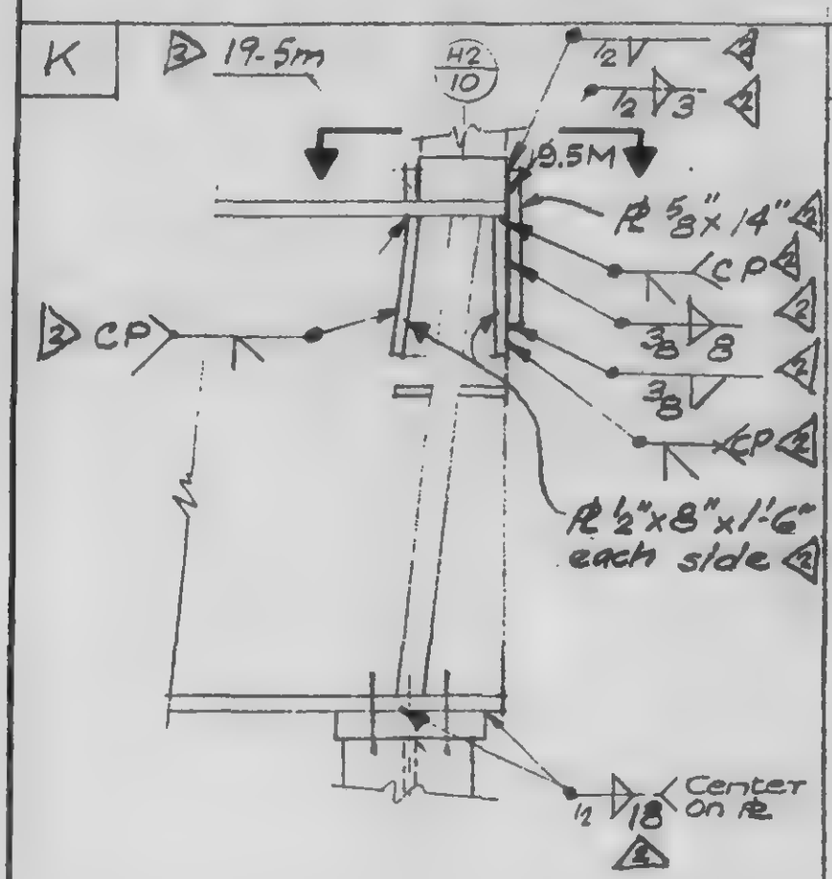

M

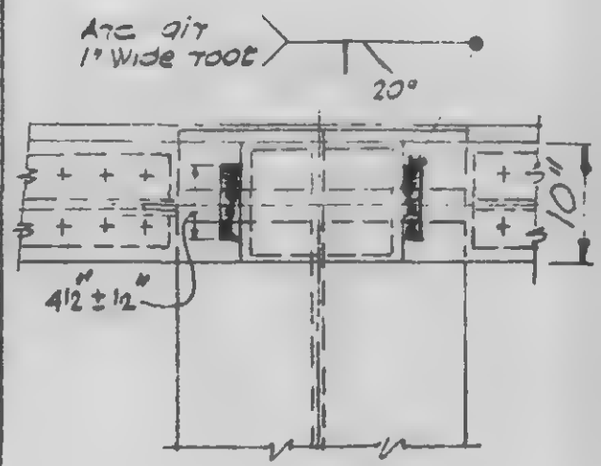

REVISIONS
12-1-79
Printed
:79

SKILLING, HELLE, CHRISTIANSEN, ROBERTSON
CONSULTING STRUCTURAL AND CIVIL ENGINEERS

DRAWING NO. 13-K.19 5.5

PROJECT WTC-1978 HOTEL SUPPORT REV. | PROJECT NO. 701.233 | BY WTC

DATE 1-3-79

COLUMN REINFORCING

N

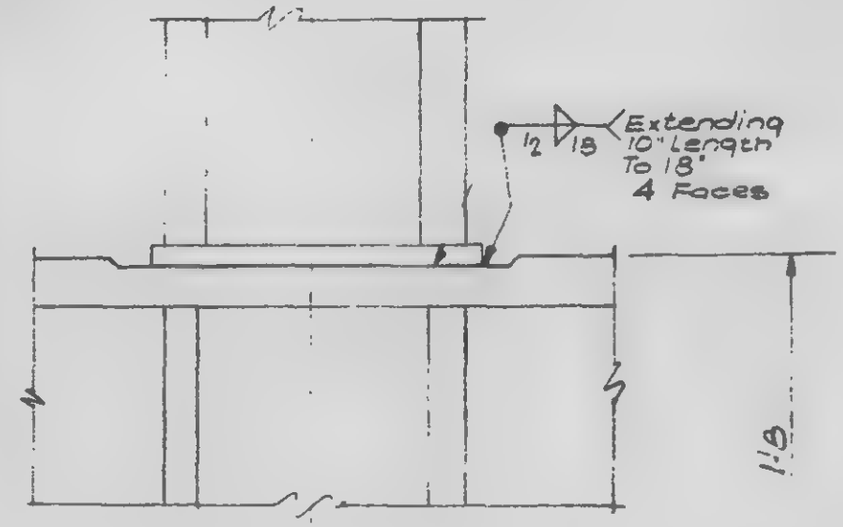

EL. 124'-0"

S

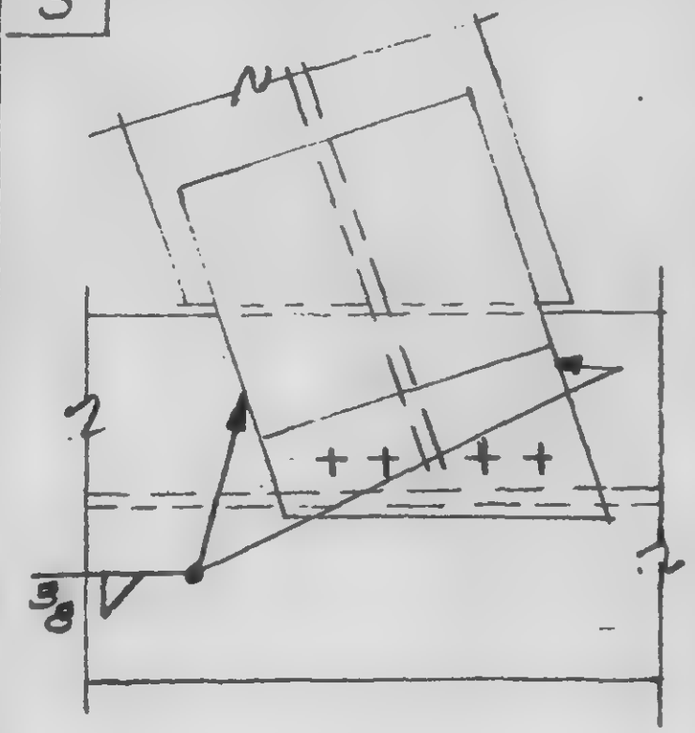

T

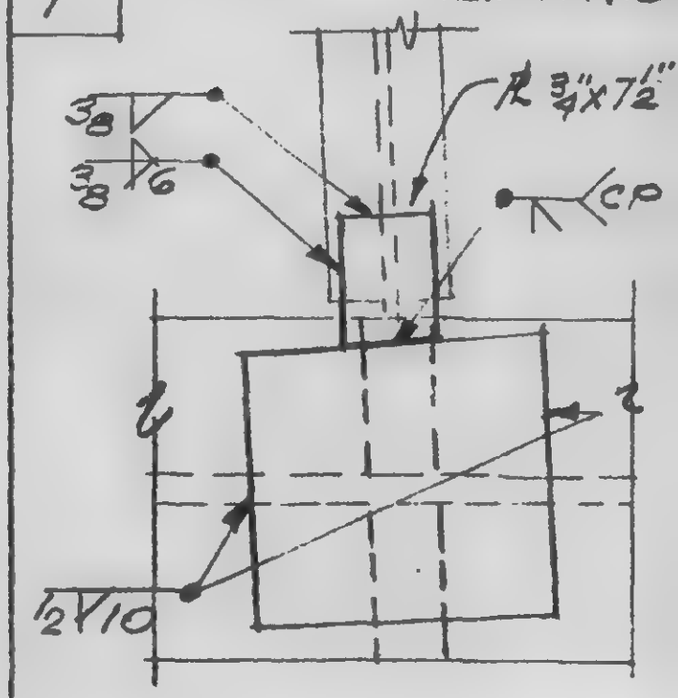

REVISIONS
△2-1-79

SKILLING, HELLE, CHRISTIANSEN, ROBERTSON
CONSULTING STRUCTURAL AND CIVIL ENGINEERS

DRAWING NO. 13-K19 6

PROJECT NTC-1978 HOTEL-SUPPORT REV. | PROJECT NO. 701.283 | BY CAB

DATE 1-3-79

WEB REINFORCING

A Ref. 13-K3.1-1B

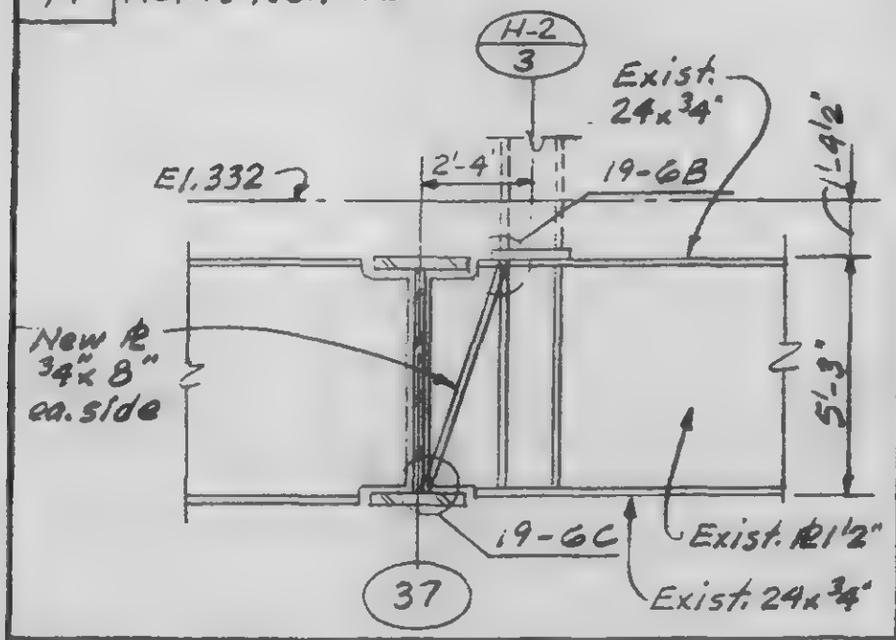

B

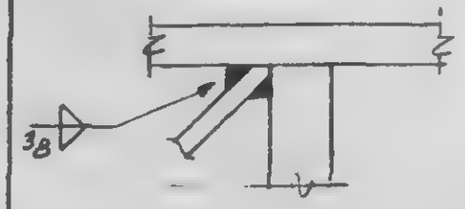

C

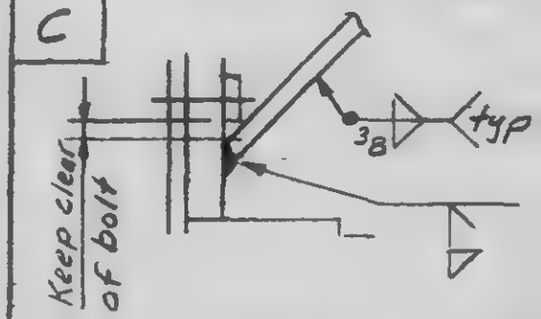

D Ref. 13-K2.1-2

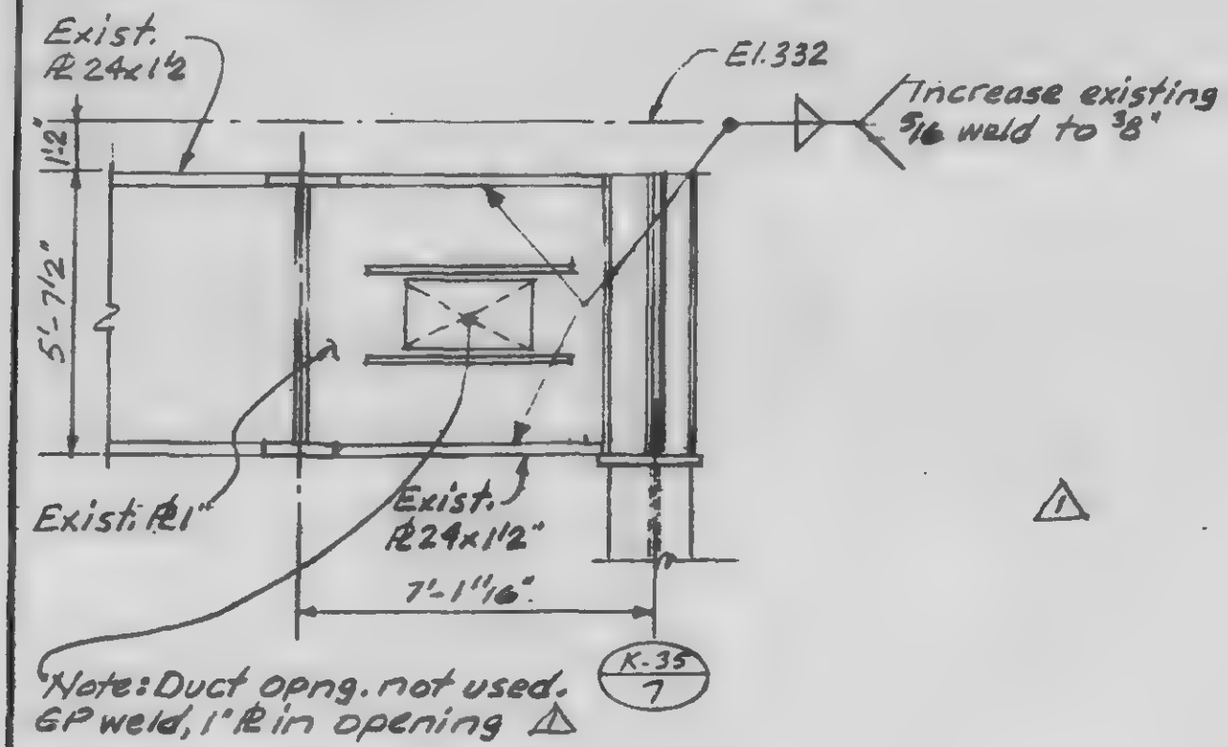

△1

REVISIONS
2-1-79

SKILLING, HELLE, CHRISTIANSEN, ROBERTSON
CONSULTING STRUCTURAL AND CIVIL ENGINEERS

DRAWING NO 13-K19 7.1

PROJECT WTC-1978 HOTEL-SUPPORT REV. | PROJECT NO 701.283 | BY WAB

DATE 1-3-79

REINFORCING DETAILS – LINE 43

A

Ref. 13-K2.1-5

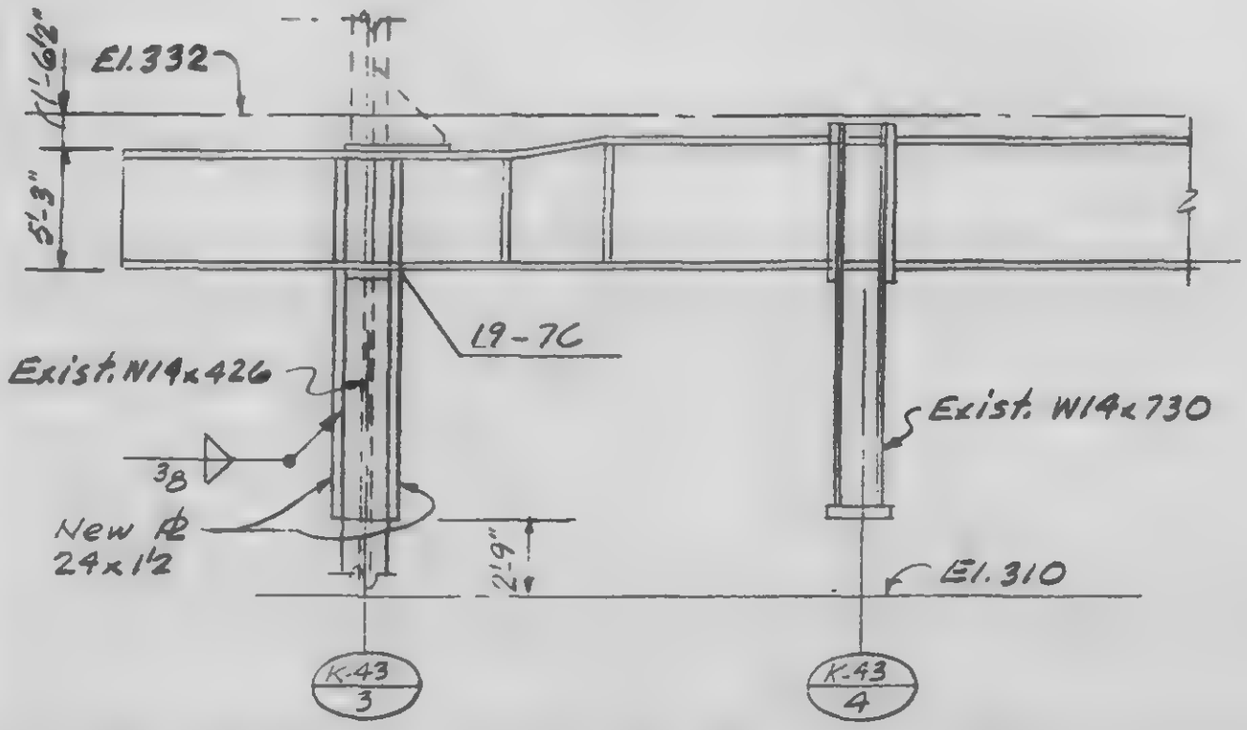

B

Ref. 13-K2.1-5

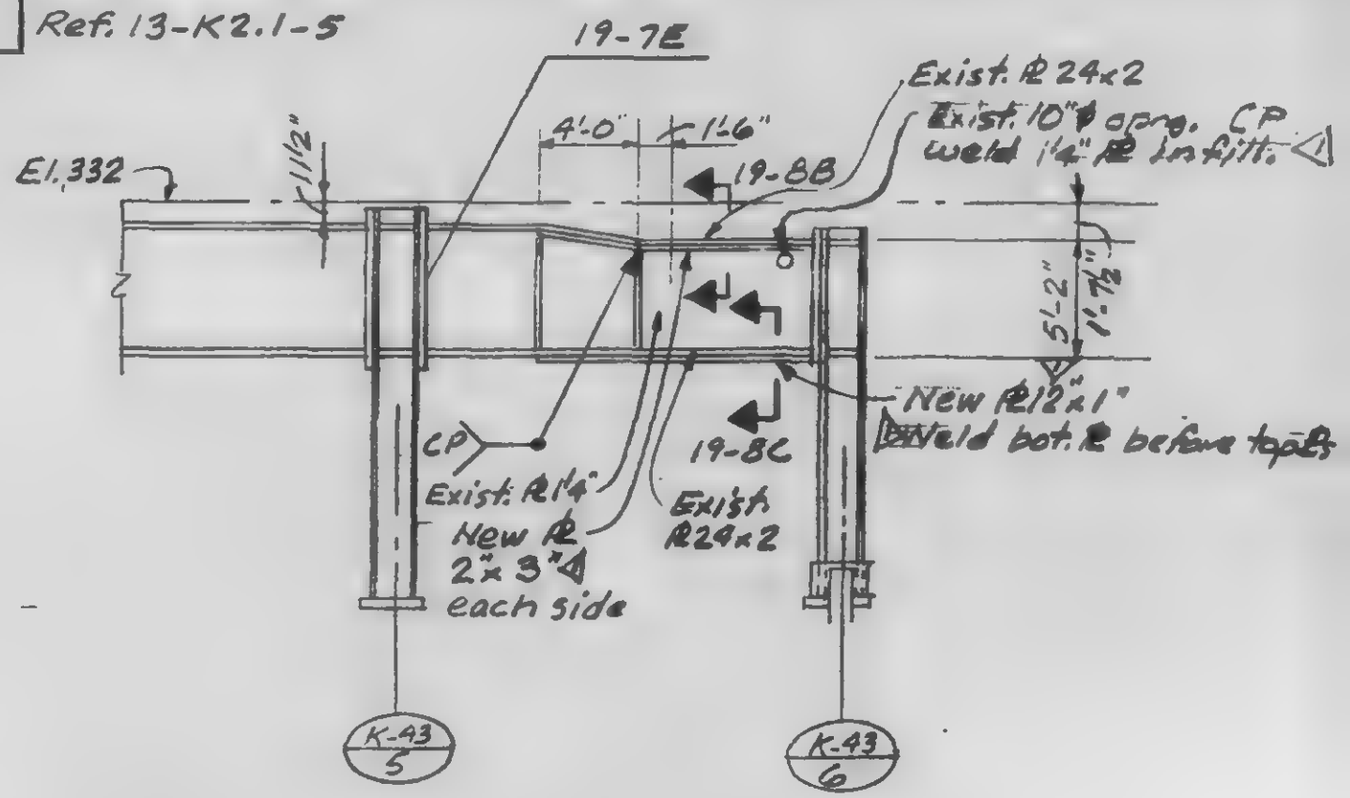

REVISIONS	SKILLING, HELLE, CHRISTIANSEN, ROBERTSON	DRAWING NO
2-1-79	CONSULTING STRUCTURAL AND CIVIL ENGINEERS	13-K19
3-20-79	PROJECT NTC-1978 HOTEL-SUPPORT REV. / PROJECT NO 701.283 / BY WAB	7.2
	REINFORCING DETAILS - LINE 43	DATE 1-3-79

C Ref. 13-K2.5-3

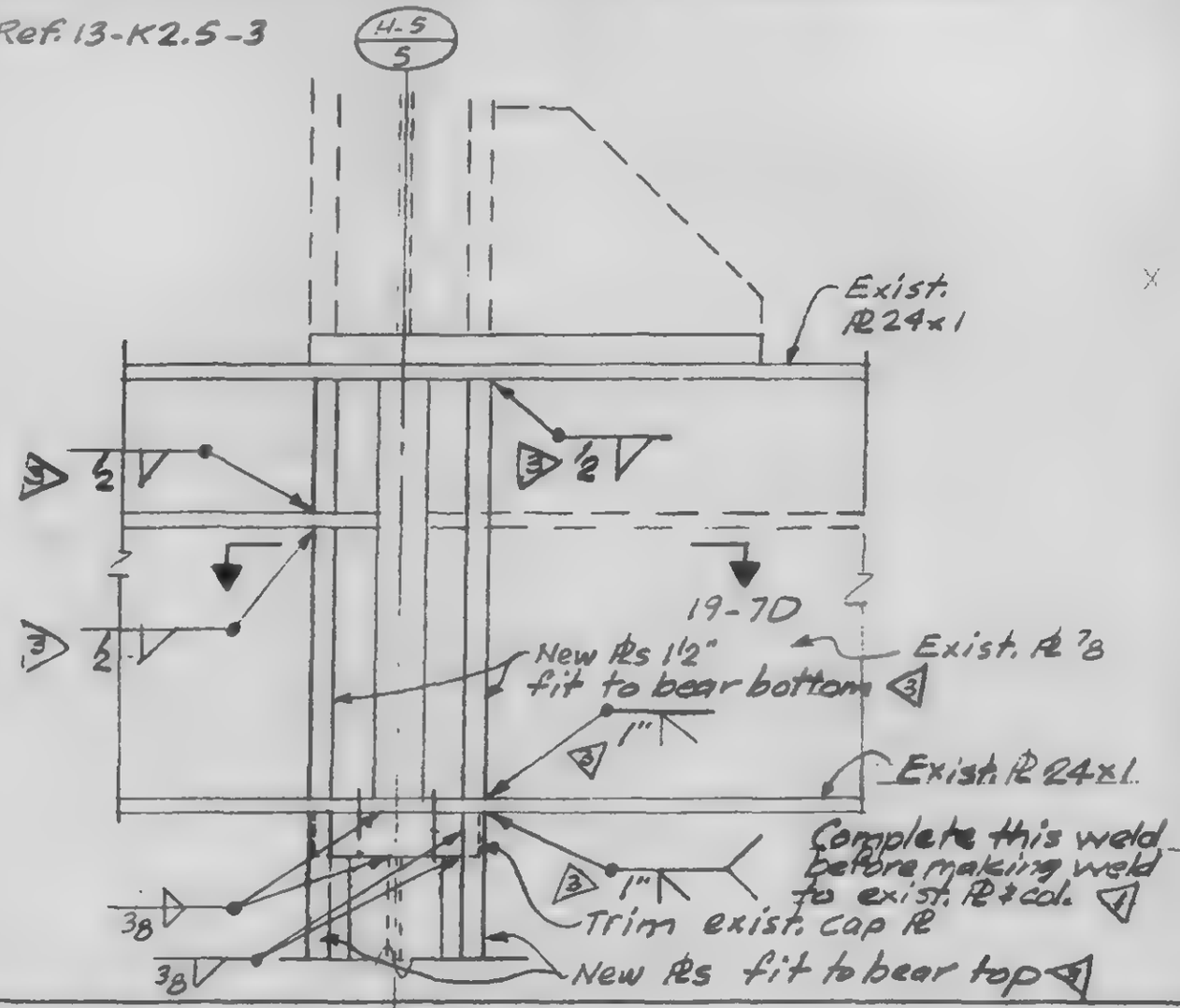

D

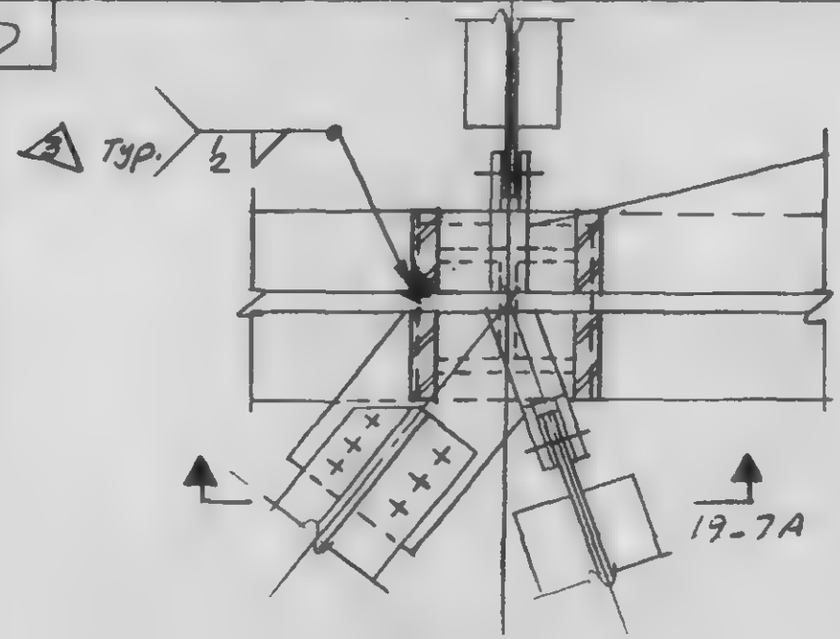

REVISIONS
12-1-79

SKILLING, HELLE, CHRISTIANSEN, ROBERTSON
CONSULTING STRUCTURAL AND CIVIL ENGINEERS

DRAWING NO 13-K19 7.3

PROJECT NTC-1978 HOTEL-SUPPORT REI. | PROJECT NO 701.283 | BY WAE

DATE 1-3-79

REINFORCING DETAIL - LINE 43

E | Ref. 13-K2.4-5B

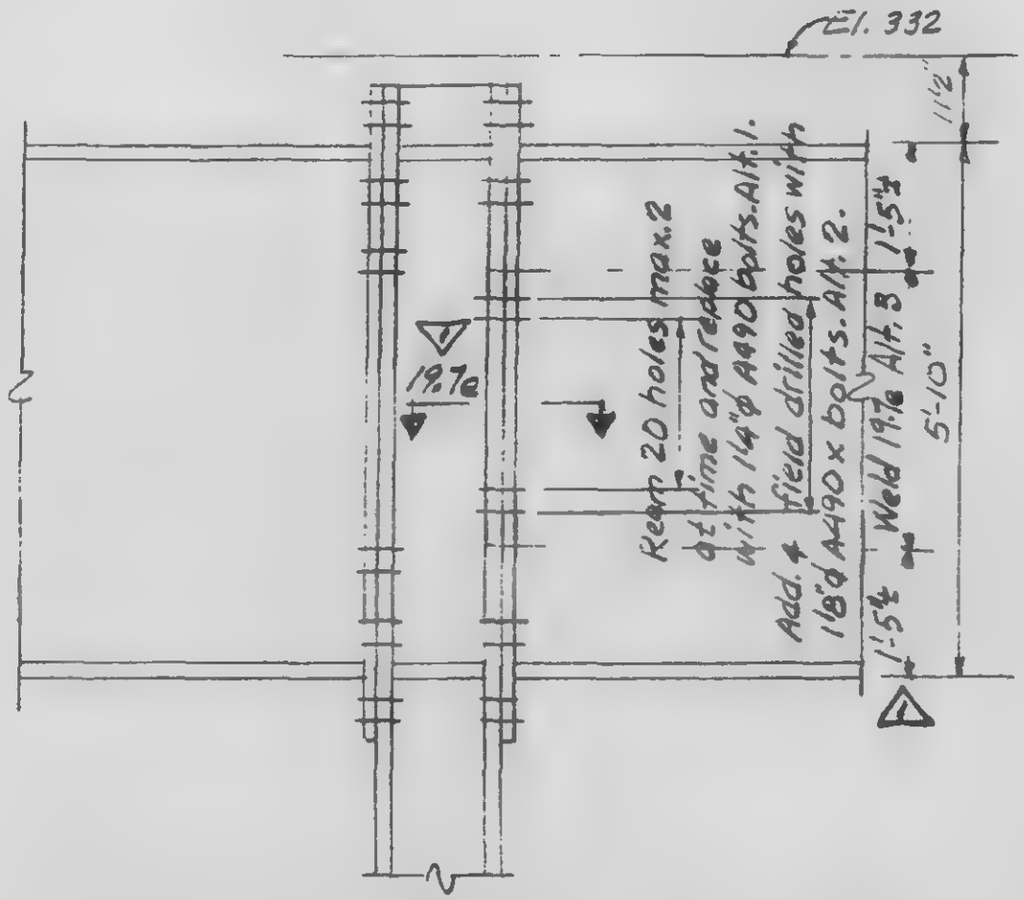

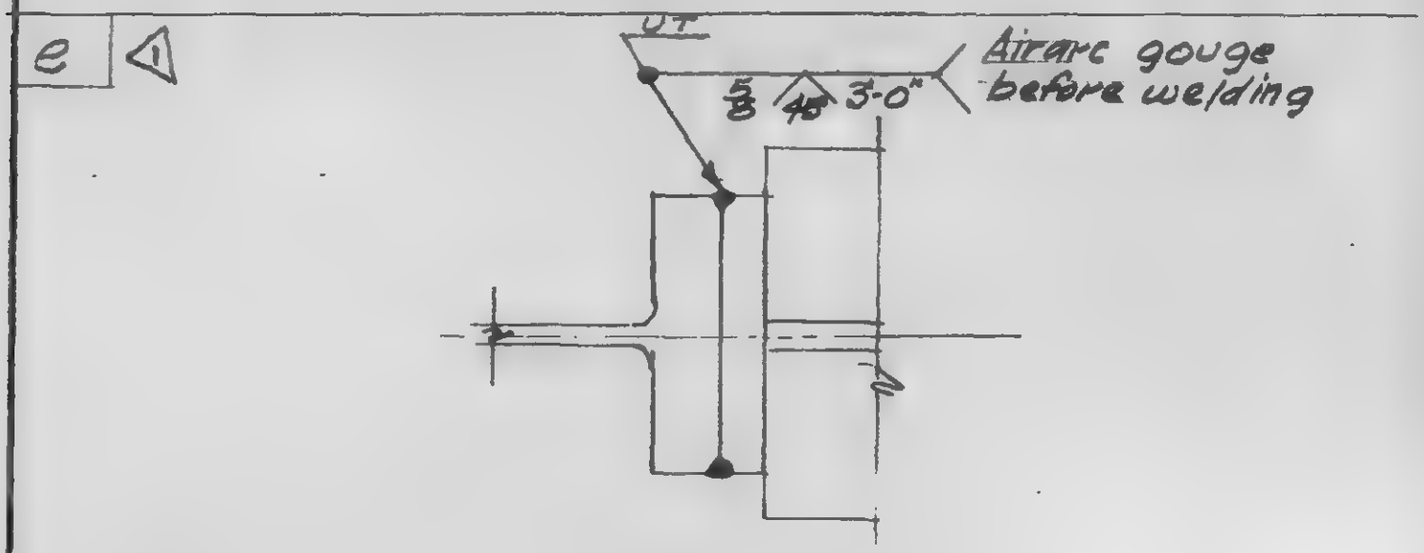

REVISIONS
2-1-79

SKILLING, HELLE, CHRISTIANSEN, ROBERTSON
CONSULTING STRUCTURAL AND CIVIL ENGINEERS

DRAWING NO 13-K19 8

PROJECT WTC-1978 HOTEL-SUPPORT REV | PROJECT NO 701.283 | BY WJB

DATE 1-3-79

FLANGE REINFORCING

A Ref. 13-K3.1-4C

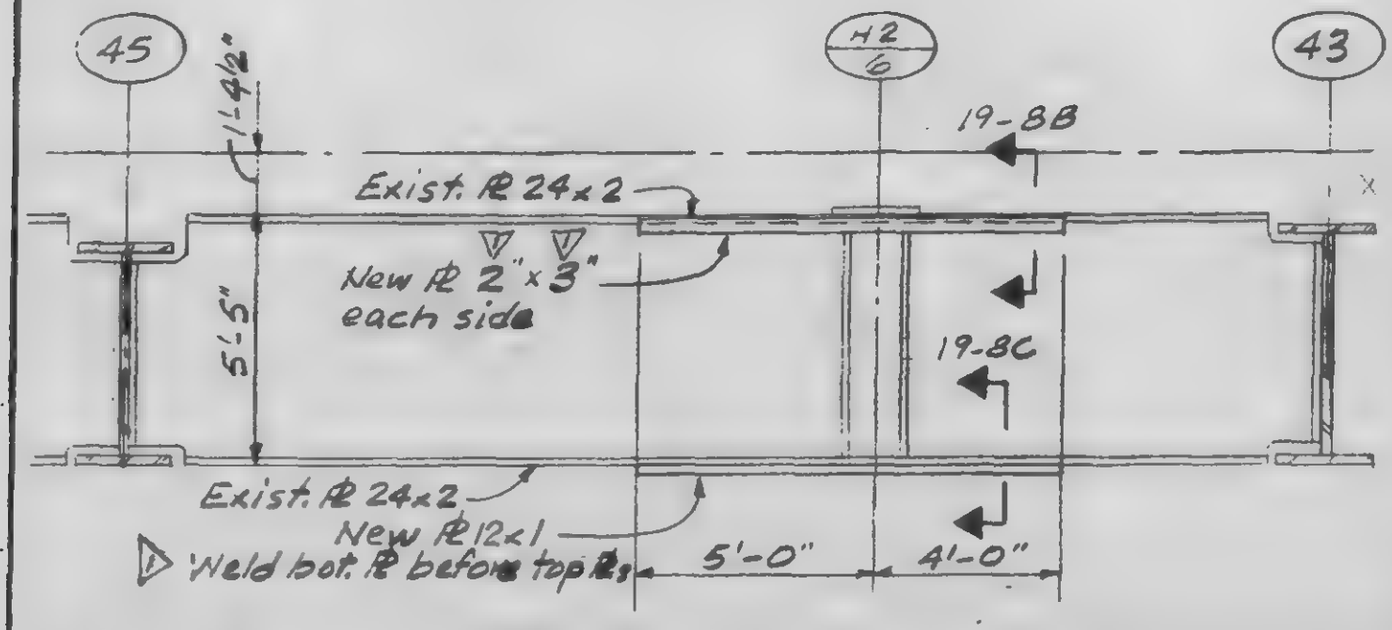

B

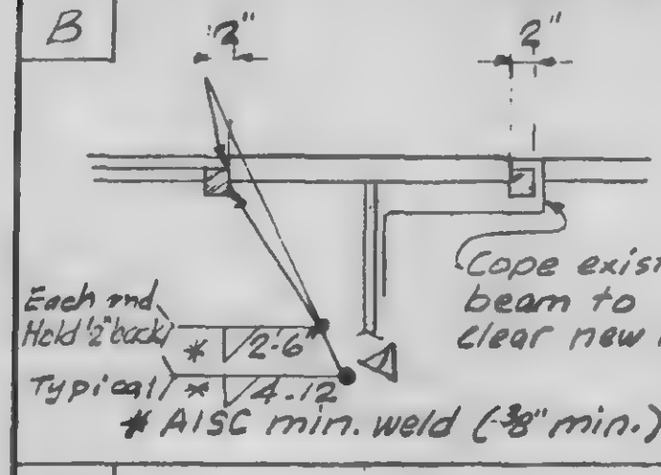

C

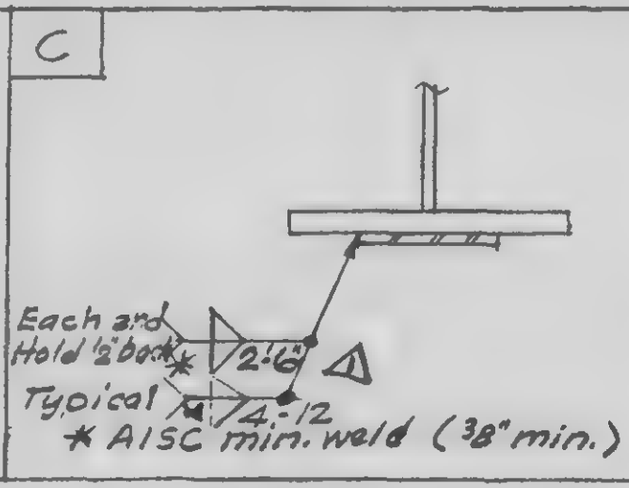

D

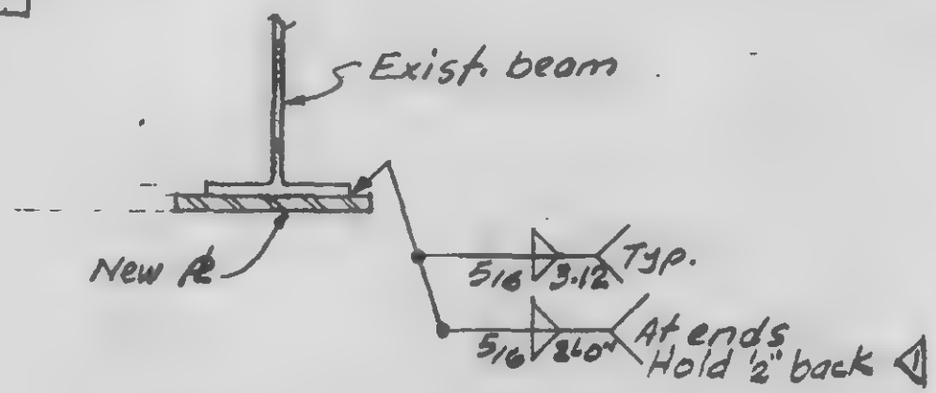

REVISIONS
1 2-1-79
2 3-12-79

SKILLING, HELLE, CHRISTIANSEN, ROBERTSON
CONSULTING STRUCTURAL AND CIVIL ENGINEERS

DRAWING NO 13-K19 9.1

PROJECT NTC-1978 HOTEL-SUPPORT REV. | PROJECT NO 701-283 | BY WDB

DATE 1-3-79

REINFORCING DETAILS - LINE 47

A Ref. 13-K2.1-7 60-¾"Ø x 0'-4½" headed shear studs in 2 rows. <2>

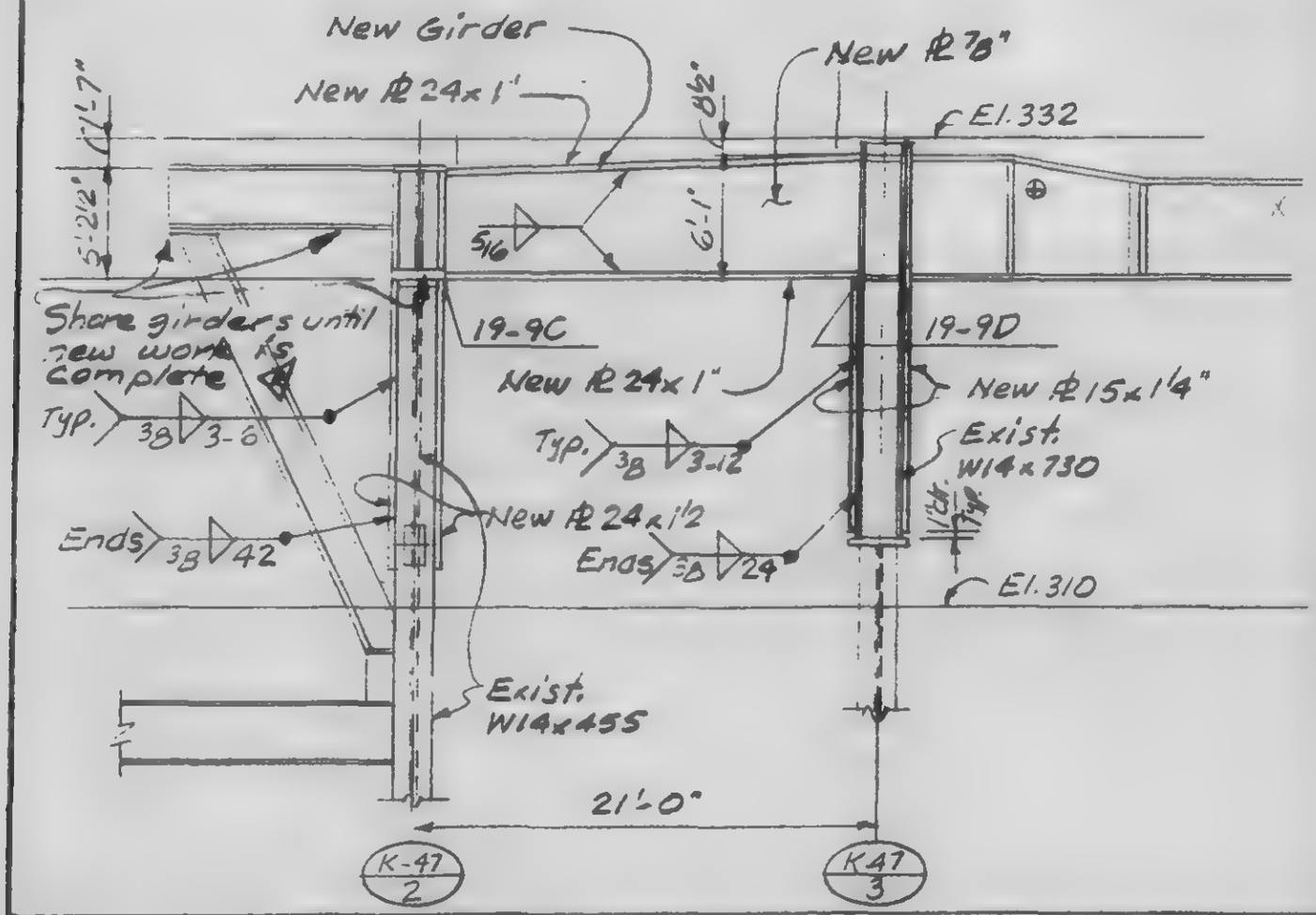

B

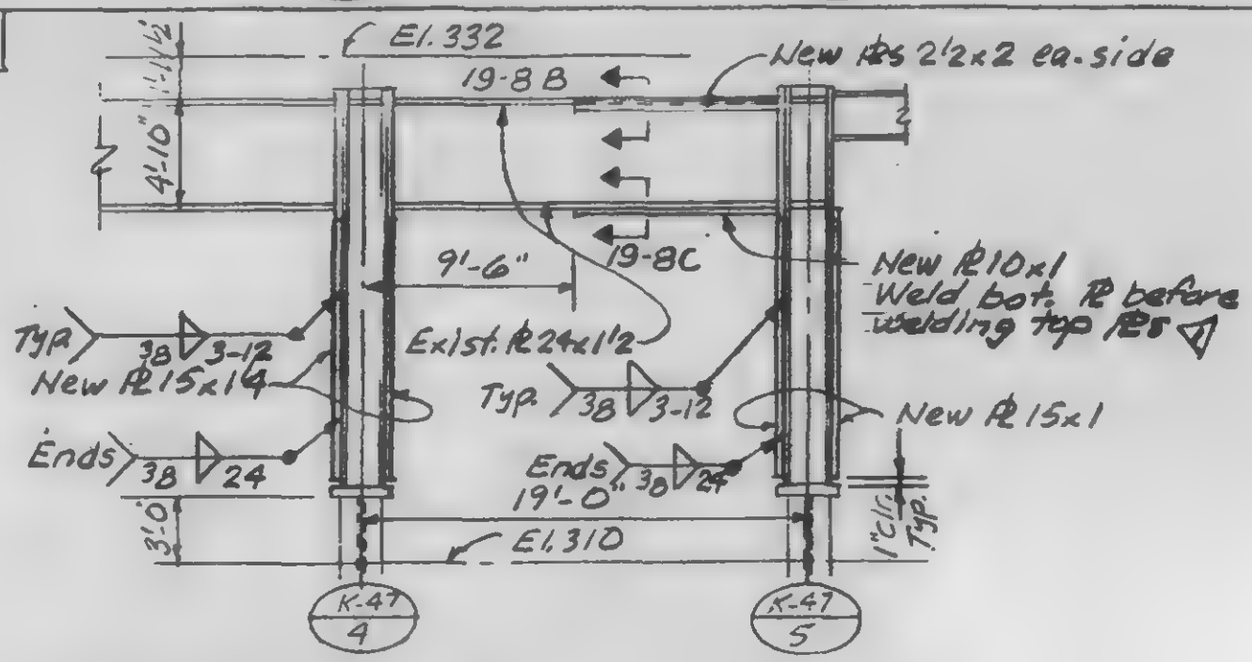

REVISIONS
△ 2-1-79

SKILLING, HELLE, CHRISTIANSEN, ROBERTSON
CONSULTING STRUCTURAL AND CIVIL ENGINEERS

DRAWING NO. 13-K19 9.2

PROJECT WTC-1978 HOTEL-SUPPORT REV. | PROJECT NO. 701.283 | BY WAB

DATE 7-3-79

REINFORCING DETAILS - LINE 47

C Ref: 13-K3.3-8B

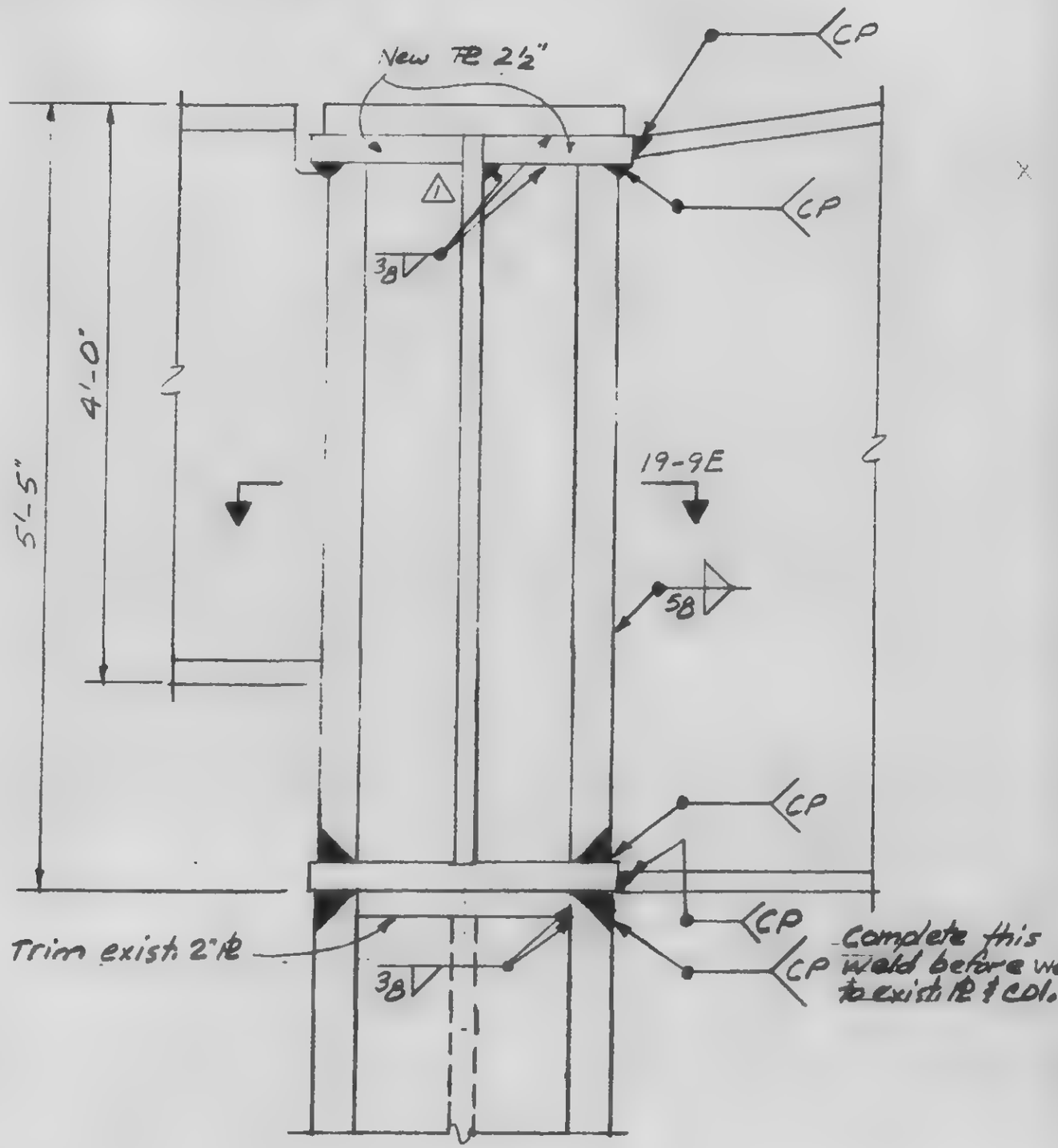

REVISIONS
2-1-79
-ted

SKILLING, HELLE, CHRISTIANSEN, ROBERTSON
CONSULTING STRUCTURAL AND CIVIL ENGINEERS

DRAWING NO. 3-K19 9.3

PROJECT NTC-1978 HOTEL-SUPPORT REV. | PROJECT NO. 701.283 | BY WAB

DATE 1-3-79

REINFORCING DETAILS - LINE 47

D | Ref: 13-K2.4-8A

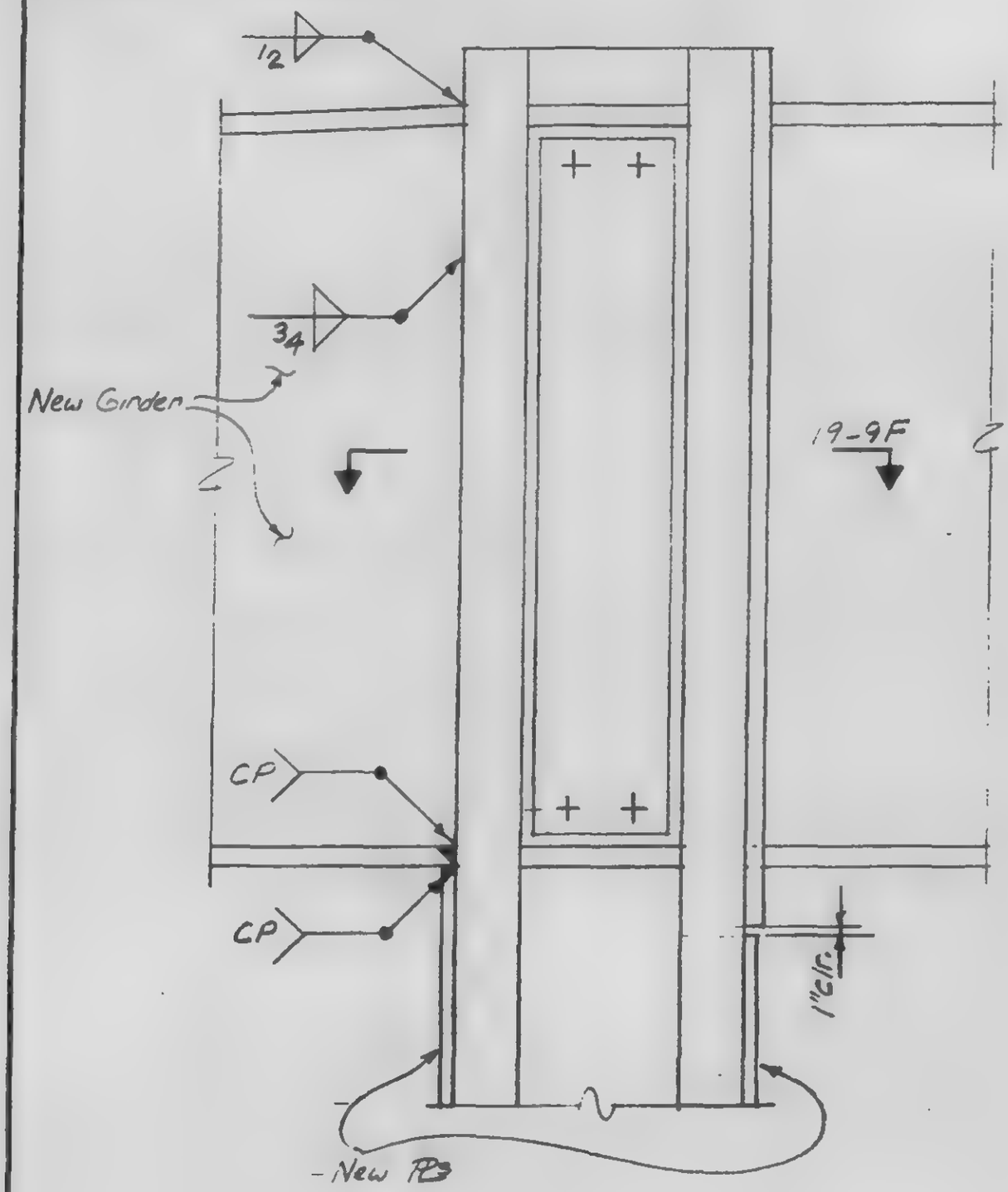

REVISIONS
2-1-79
Printed

SKILLING, HELLE, CHRISTIANSEN, ROBERTSON
CONSULTING STRUCTURAL AND CIVIL ENGINEERS

DRAWING NO. 13-K19 9.4

PROJECT NTC-1978 HOTEL-SUPPORT REV. | PROJECT NO 701.283 | BY WAB

DATE 1-3-79

REINFORCING DETAILS - LINE 47

E

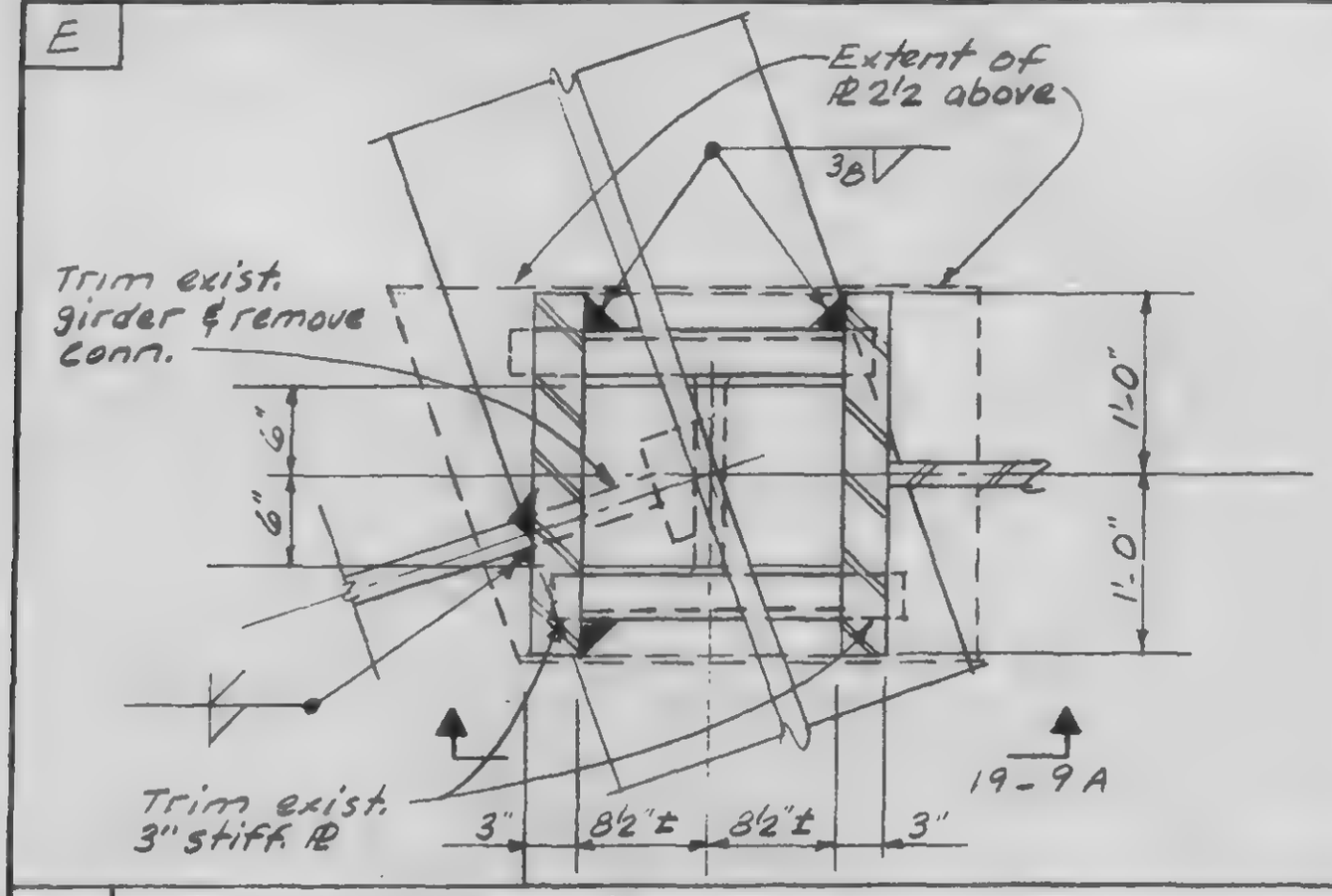

F

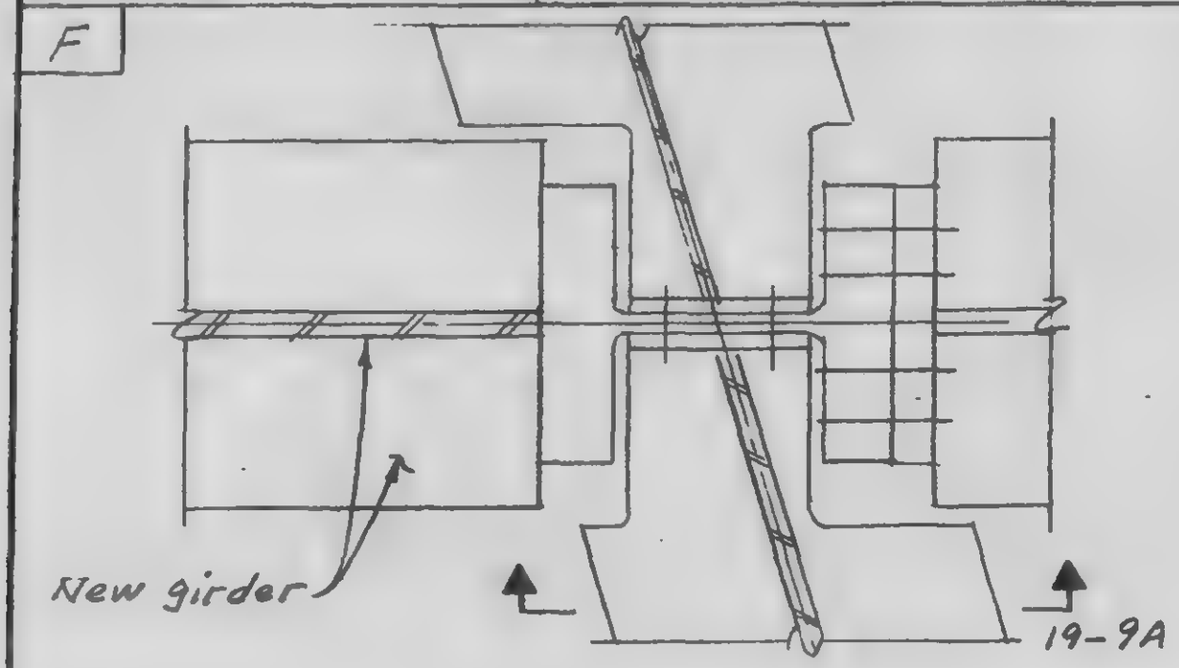

REVISIONS
12-79

SKILLING, HELLE, CHRISTIANSEN, ROBERTSON
CONSULTING STRUCTURAL AND CIVIL ENGINEERS

DRAWING NO. 13-K19 10

PROJECT WTC-1978 HOTEL-SUPPORT REI. | PROJECT NO. 701.283 | BY JDB

DATE 1-3-79

FLANGE REINFORCING

A Ref. 13-K3.1-6C

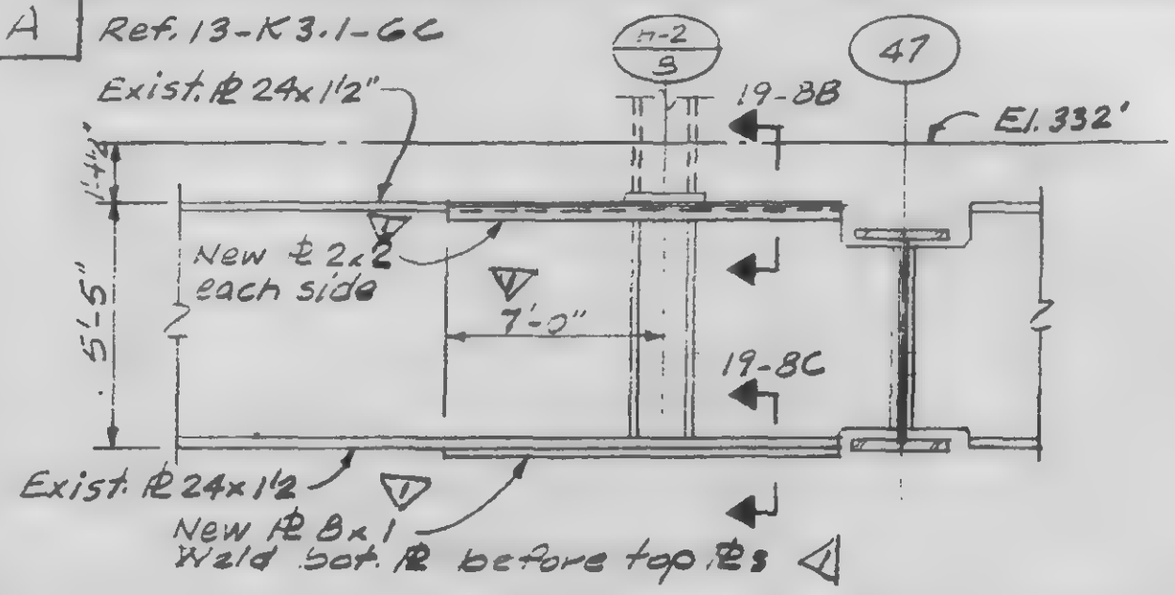

3 Ref. 13-K3.1-8A

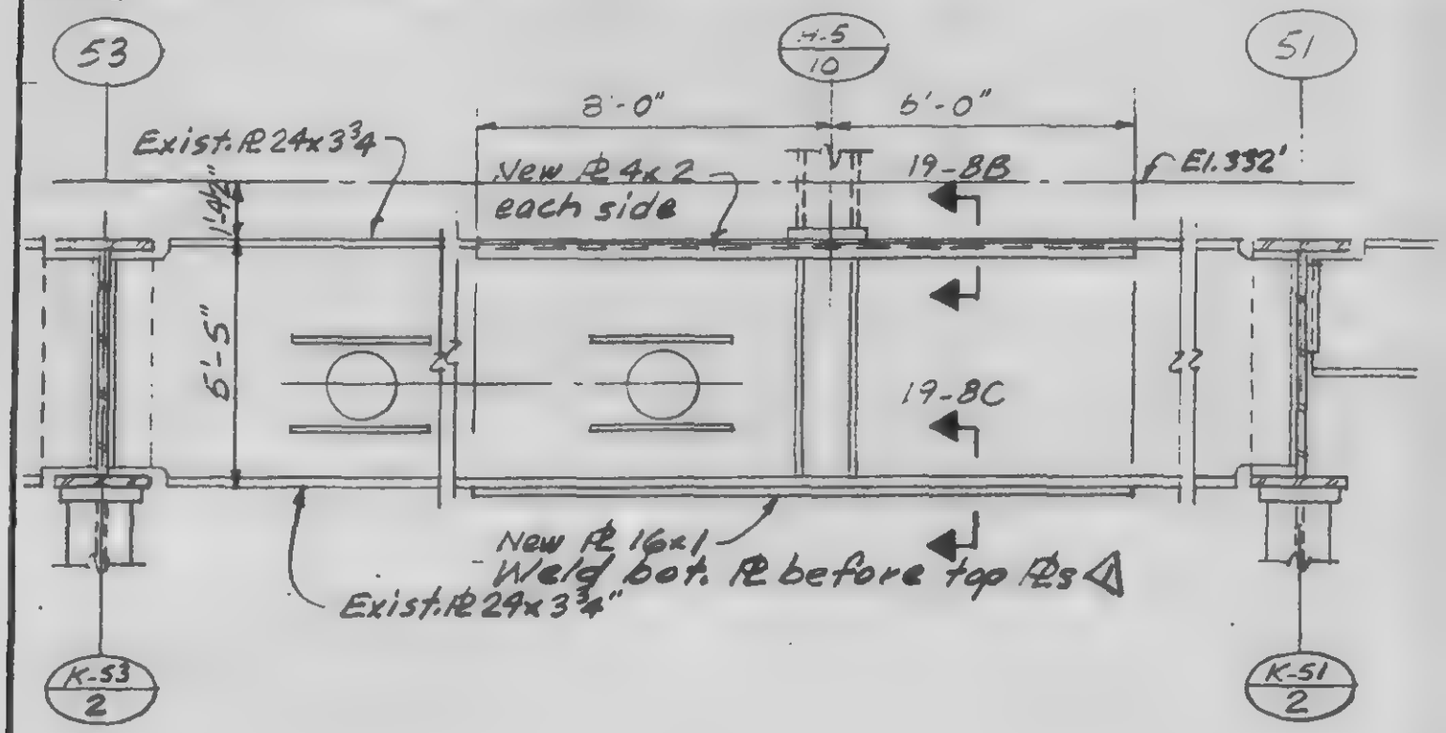

REVISIONS
2-1-79
3-20-79

SKILLING, HELLE, CHRISTIANSEN, ROBERTSON
CONSULTING STRUCTURAL AND CIVIL ENGINEERS

DRAWING NO. 13-K19 11.1

PROJECT NTC-197B HOTEL-SUPPORT REV. | PROJECT NO 701.283 | BY WCB

DATE 1-3-79

REINFORCING DETAILS

A

Ref. 13-K2.1-9, 10 & 11

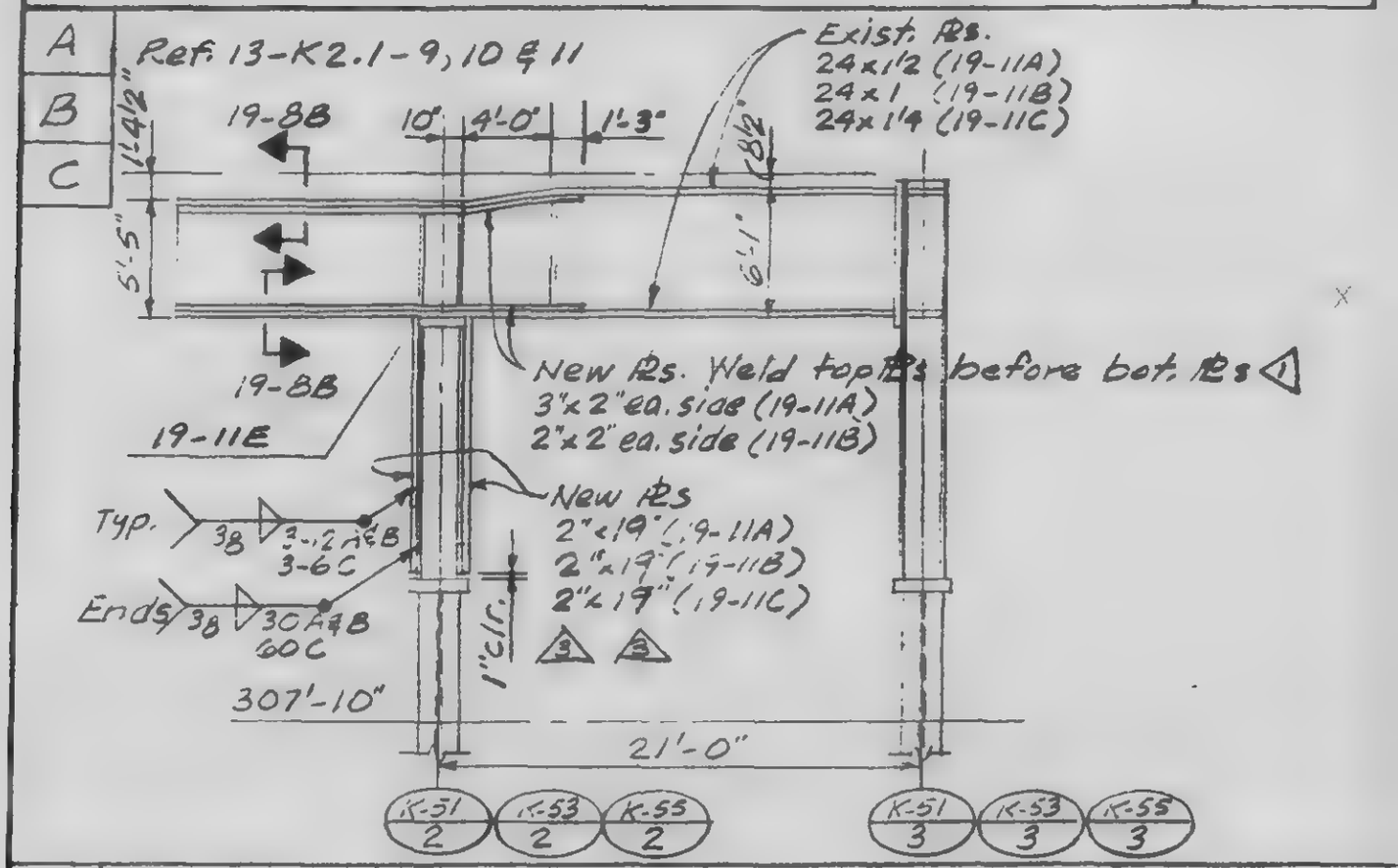

B

C

D

Ref. 13-K2.1-12

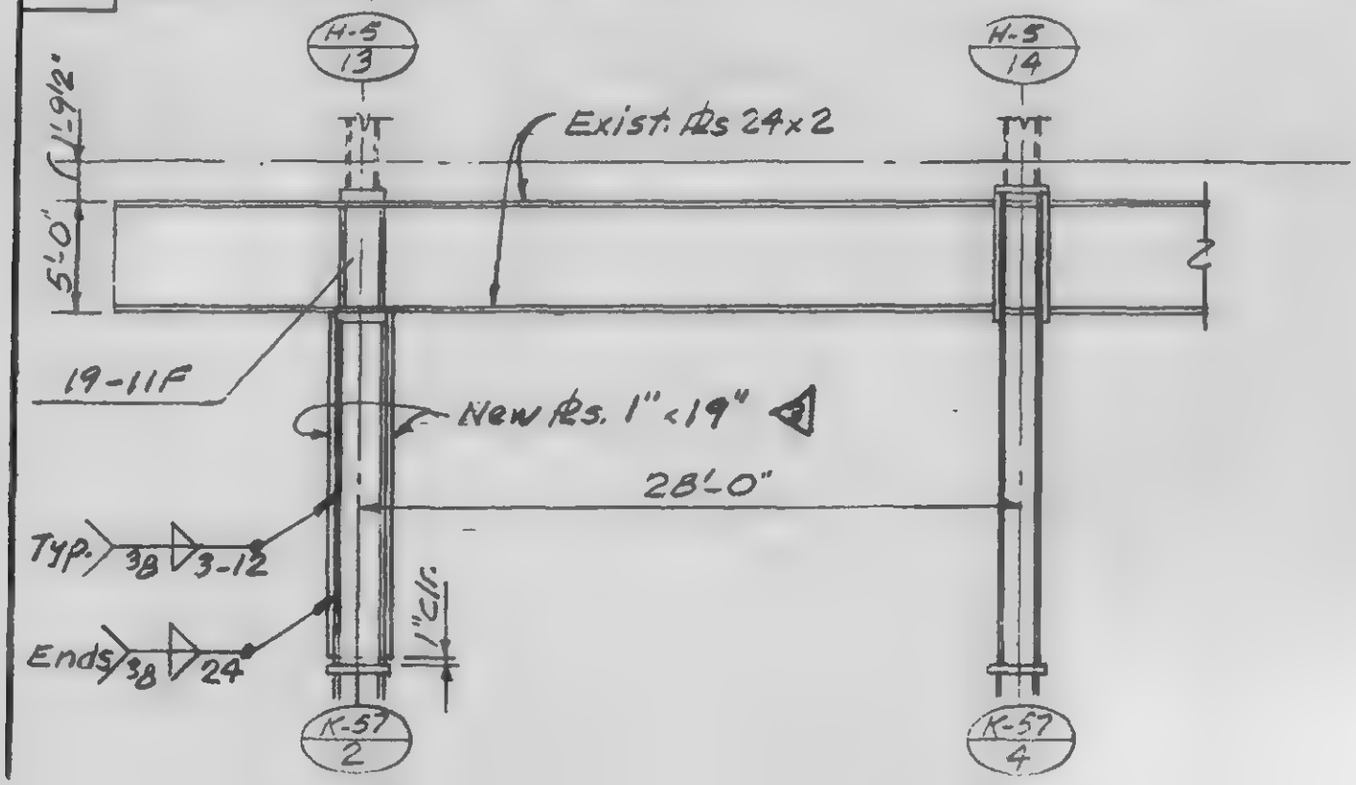

REVISIONS	SKILLING, HELLE, CHRISTIANSEN, ROBERTSON CONSULTING STRUCTURAL AND CIVIL ENGINEERS			DRAWING NO
	PROJECT NTC-.978 HOTEL-SUPPORT REI	PROJECT NO 701-283	BY [illegible]	13-K19 11.2
	REINFORCING DETAILS			DATE 1-3-79

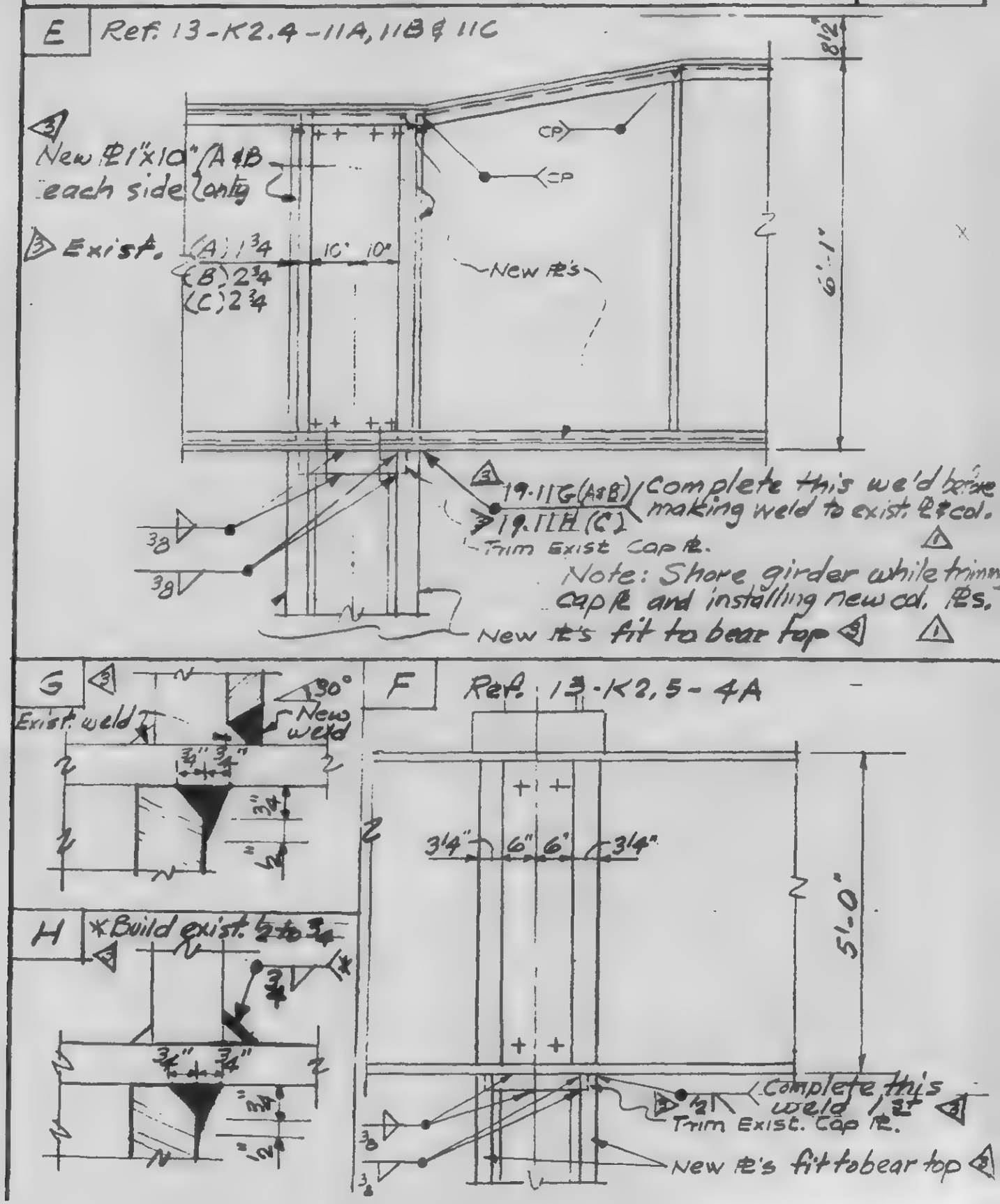

REVISIONS
12-1-79

SKILLING, HELLE, CHRISTIANSEN, ROBERTSON
CONSULTING STRUCTURAL AND CIVIL ENGINEERS

DRAWING NO. 13-K19 12

PROJECT NTC-178 HOTEL - SUPPORT REV. | PROJECT NO. 701.283 | BY WAB

DATE 1-3-79

REINFORCING DETAILS

A

Ref. 13-K2.1-11

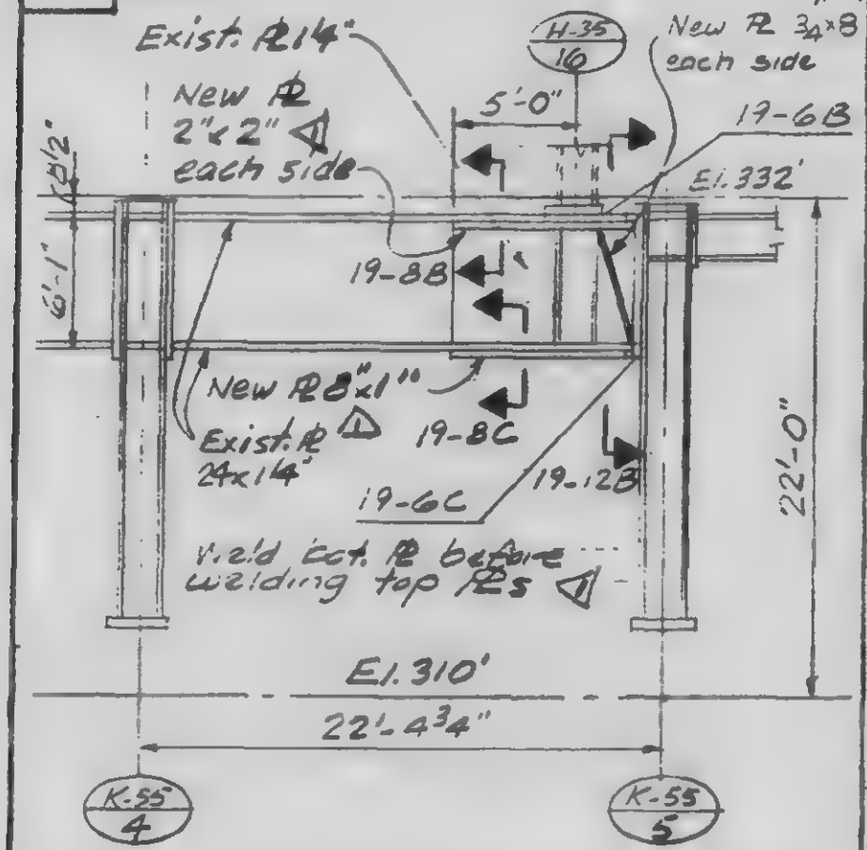

B

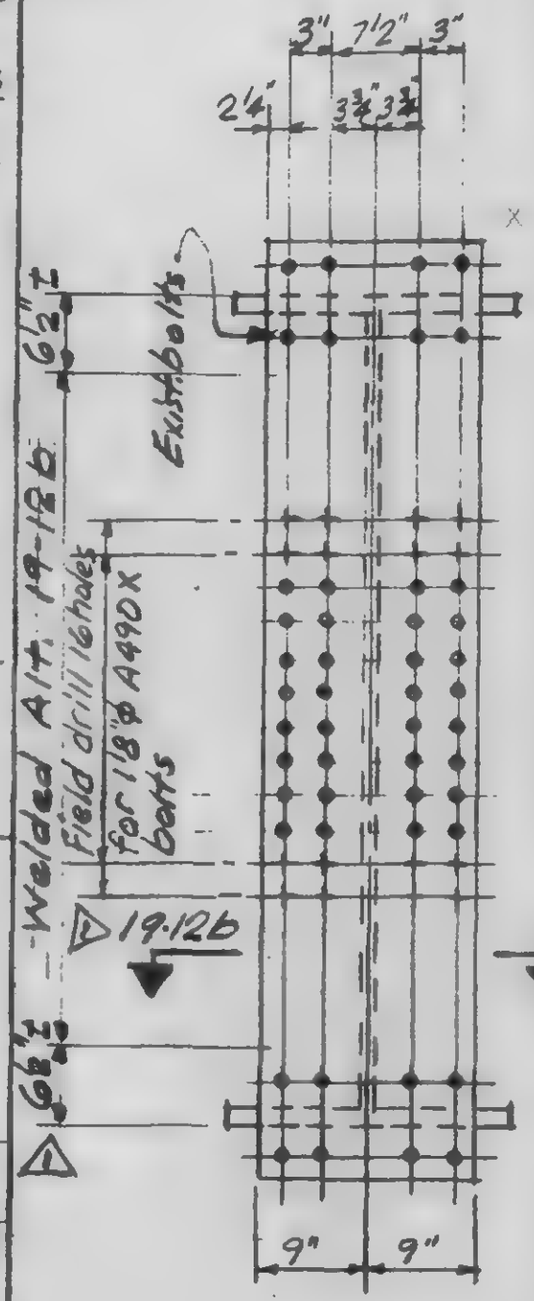

6

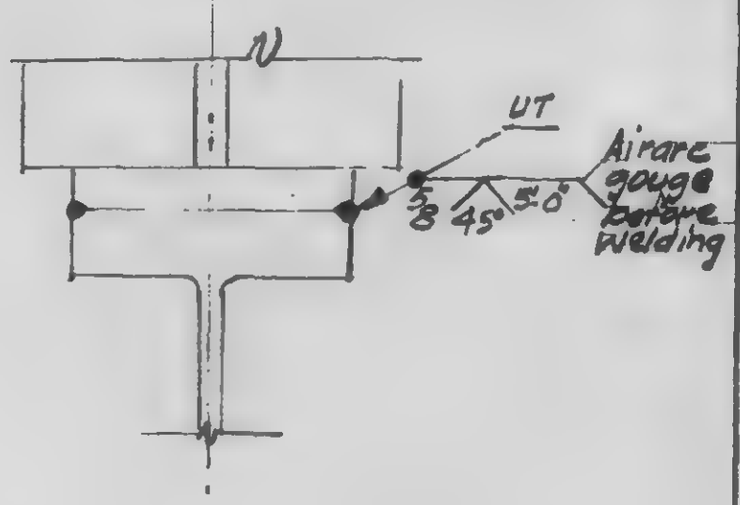

REVISIONS
△2-1-79
△3-12-79

SKILLING, HELLE, CHRISTIANSEN, ROBERTSON
CONSULTING STRUCTURAL AND CIVIL ENGINEERS

DRAWING NO 13-K19 13

PROJECT NTC-1978 HOTEL-SUPPORT REV | PROJECT NO 701.253 | BY WAB | DATE 1-3-79

REINFORCING DETAILS

A Ref. 13-3.1-11C

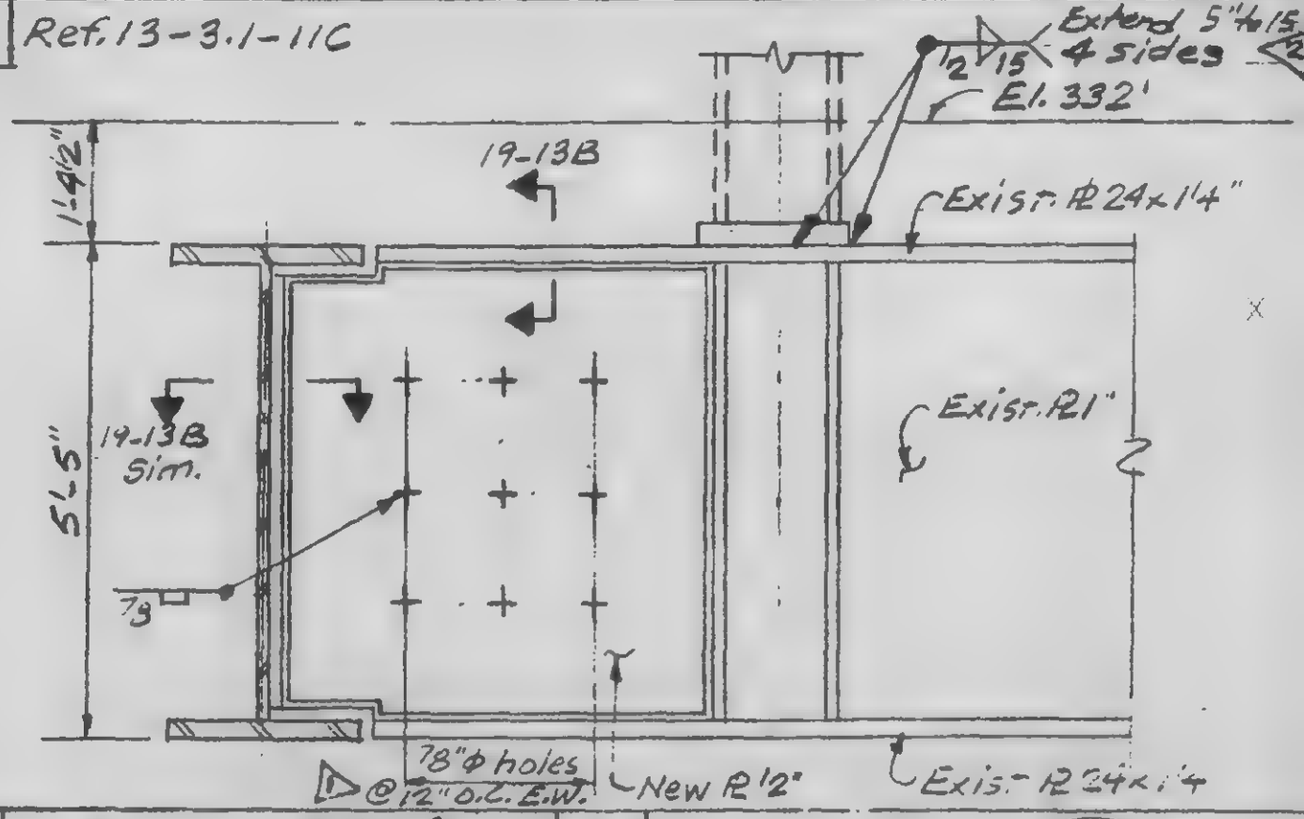

B

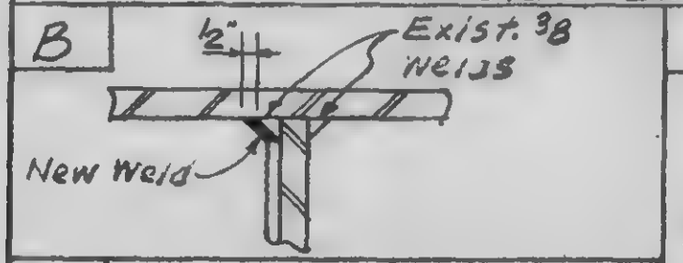

C △1

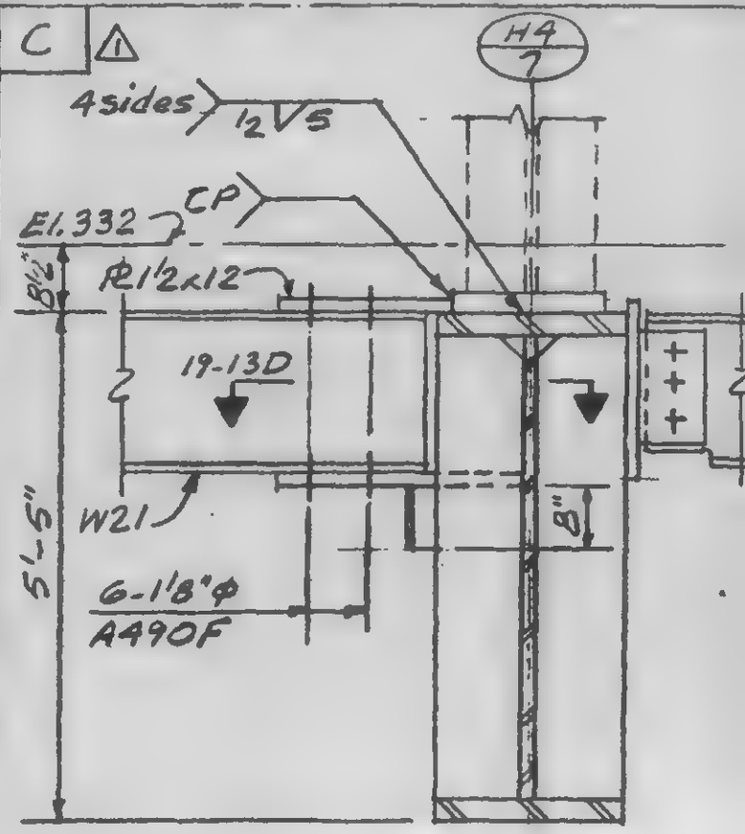

D △1

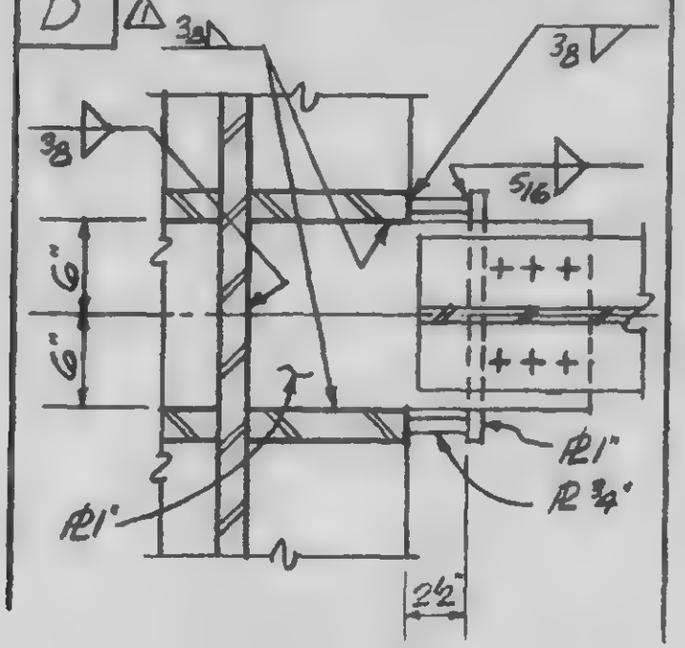

REVISIONS

SKILLING, HELLE, CHRISTIANSEN, ROBERTSON
CONSULTING STRUCTURAL AND CIVIL ENGINEERS

DRAWING NO. 13-K19 14

PROJECT WTC-1973 140TSL-SUPPORT REV. | PROJECT NO. 781,283 | BY WCB

DATE 3-12-79

HORIZONTAL ANCHOR COL. HS-1

PLAN

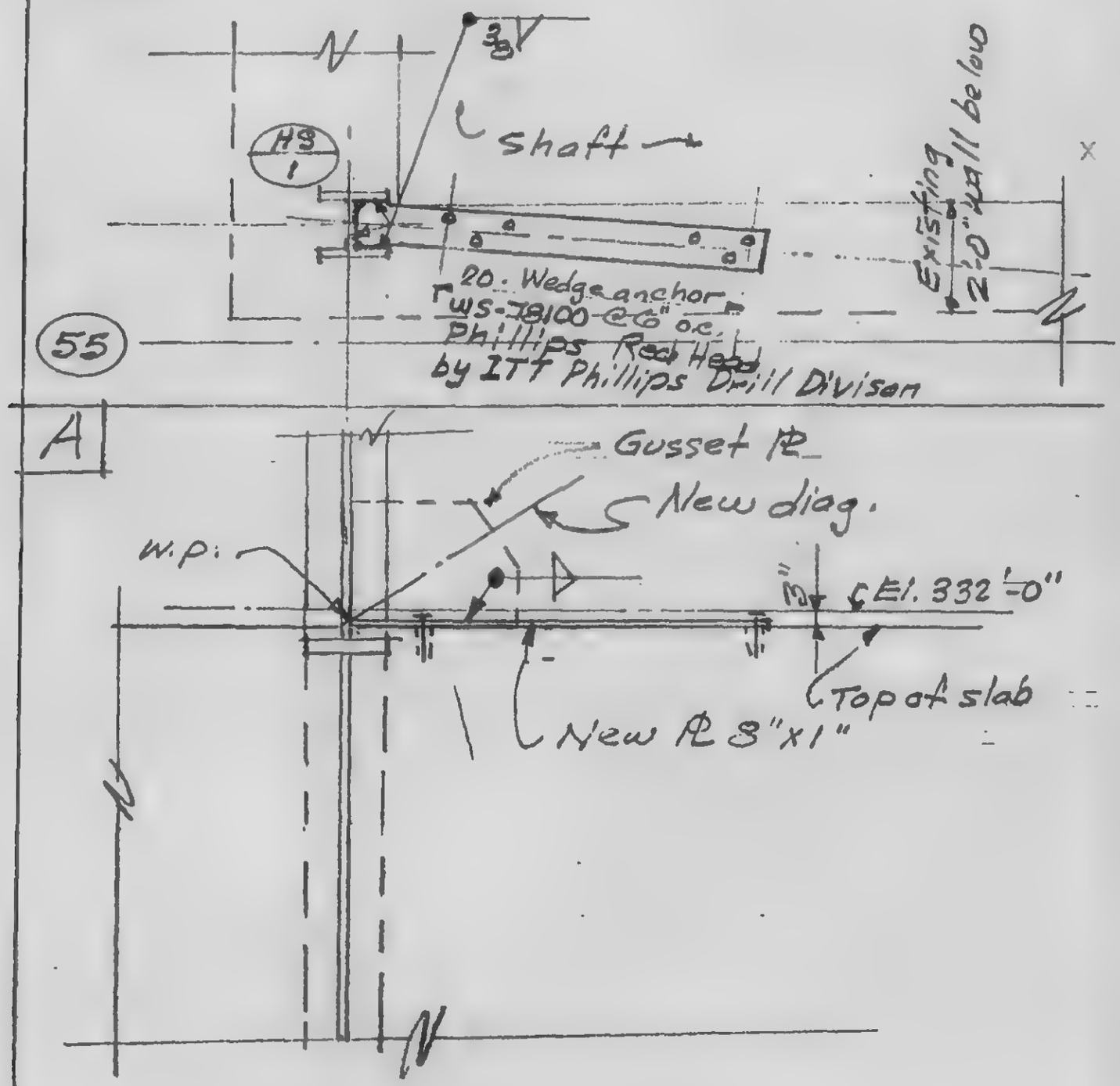

REVISIONS	SKILLING, HELLE, CHRISTIANSEN, ROBERTSON CONSULTING STRUCTURAL AND CIVIL ENGINEERS	DRAWING NO.
10/5/79	PROJECT WTC-1978 HOTEL-SUPPORT REV. — PROJECT NO. 701.283 — BY WAB	13-K19-15.1
	TRANSFORMER AREA - DEMOLITION PLAN - EL. 307-4	DATE 9/7/79

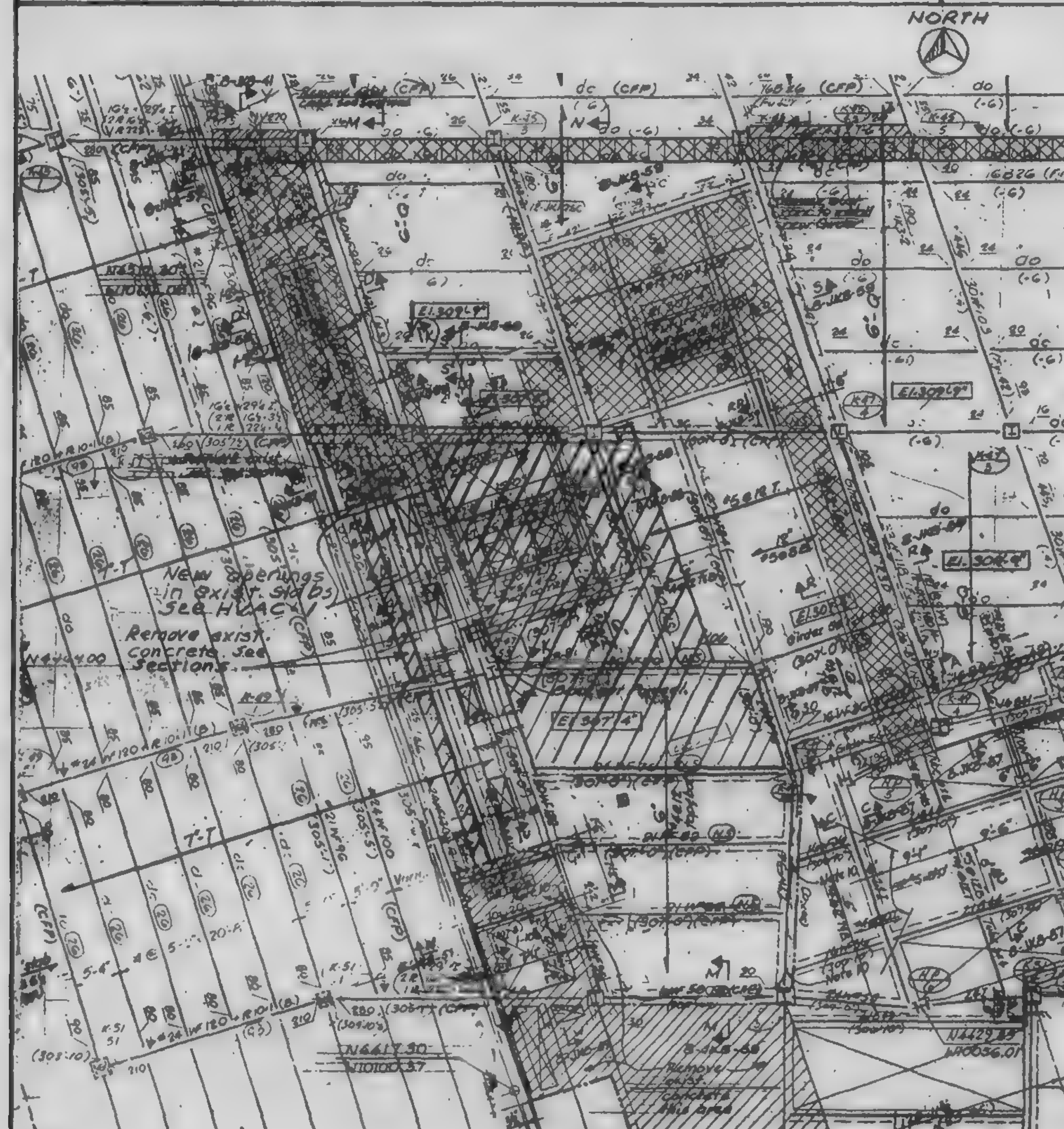

REVISIONS	SKILLING, HELLE, CHRISTIANSEN, ROBERTSON	DRAWING NO
10/5/79	CONSULTING STRUCTURAL AND CIVIL ENGINEERS	13-K19-15.2
	PROJECT WTC- HOTEL + SUPPORT RSV. / PROJECT NO 701.238 / BY WAB	
	TRANSFORMER AREA - FRAMING PLAN EL. 310	DATE 9/7/79

See 19-153 for dimensions.

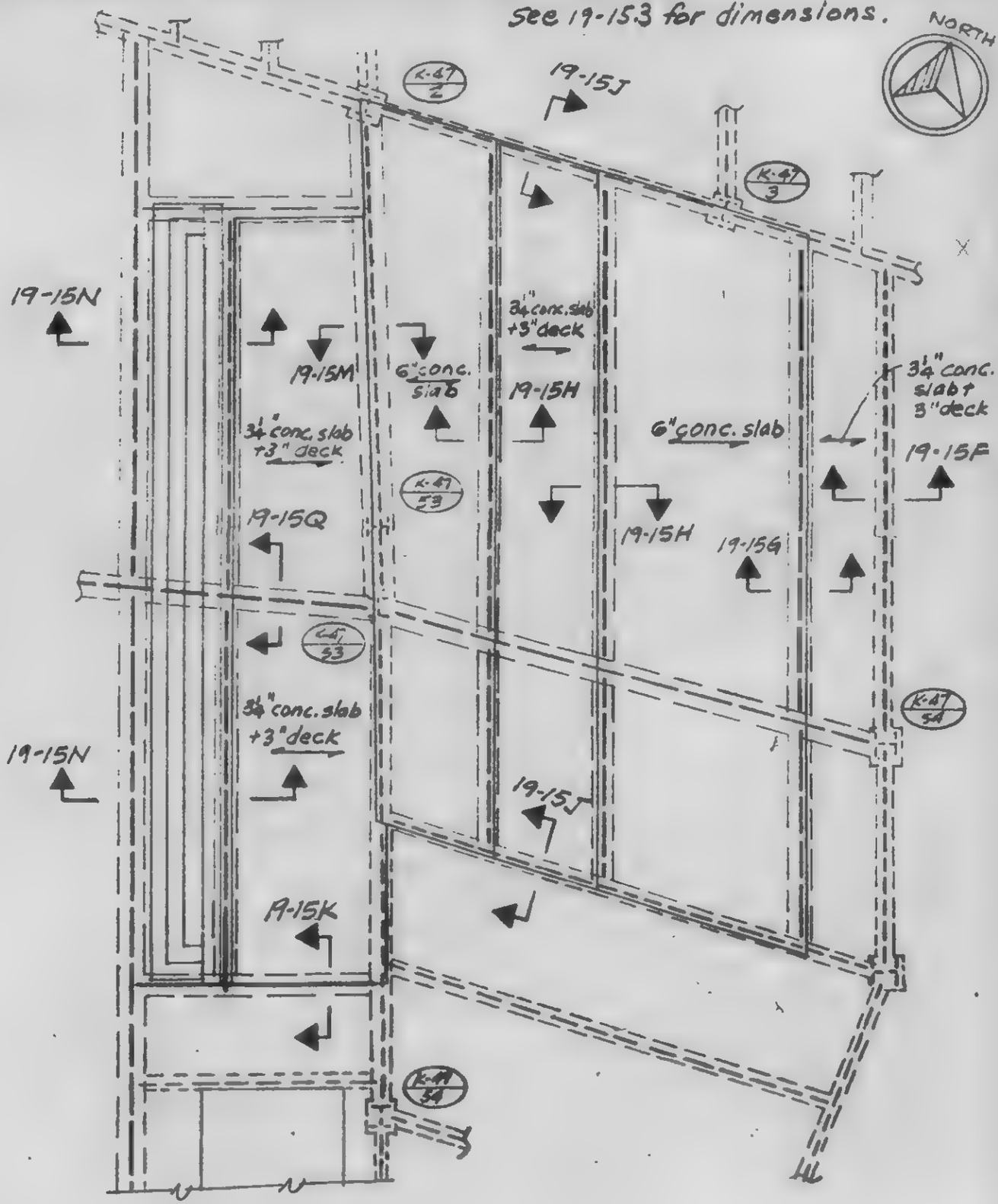

REVISIONS
10/5/79

SKILLING, HELLE, CHRISTIANSEN, ROBERTSON
CONSULTING STRUCTURAL AND CIVIL ENGINEERS

DRAWING NO. 13-K19-15.3

PROJECT: NTC - HOTEL - SUPPORT REV | PROJECT NO: 701.283 | BY: WAB

DATE: 9/7/79

TRANSFORMER AREA - FRAMING PLAN - EL. 307'

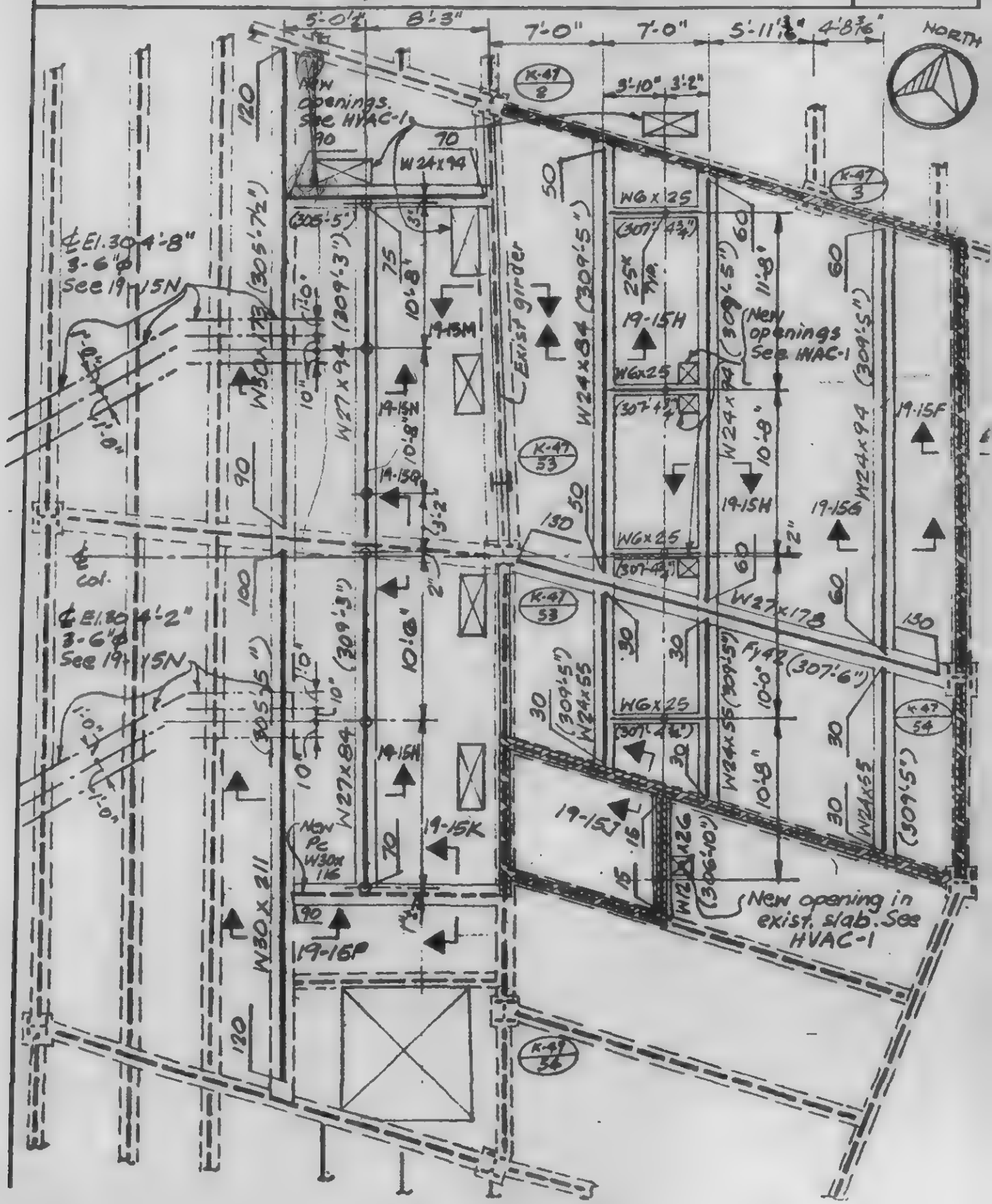

REVISIONS
6/5/79

SKILLING, HELLE, CHRISTIANSEN, ROBERTSON
CONSULTING STRUCTURAL AND CIVIL ENGINEERS

DRAWING NO. 13-K19-15.4

PROJECT NTC-1978 HOTEL-SUPPORT REV. | PROJECT NO. 701.293 | BY NAB

TRANSFORMER AREA - FRAMING PLAN 294

DATE 9/7/79

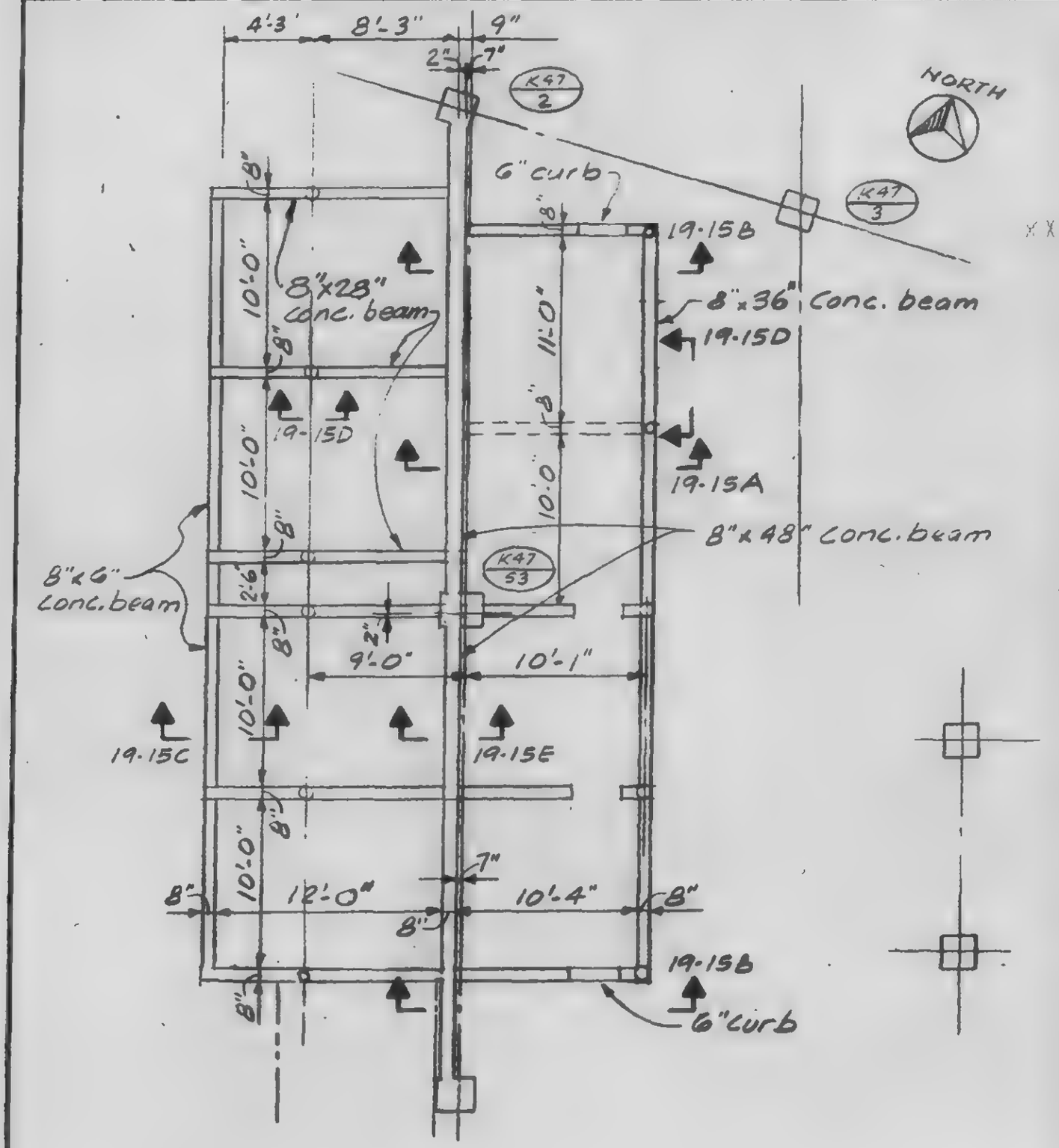

REVISIONS
10/5/79

SKILLING, HELLE, CHRISTIANSEN, ROBERTSON
CONSULTING STRUCTURAL AND CIVIL ENGINEERS

DRAWING NO. 13-K19-15.5

PROJECT WTC-1979 HOTEL-SUPPORT REV. | PROJECT NO 701.283 | BY WAB

DATE 9/7/79

TRANSFORMER AREA - SECTIONS 2'4

A

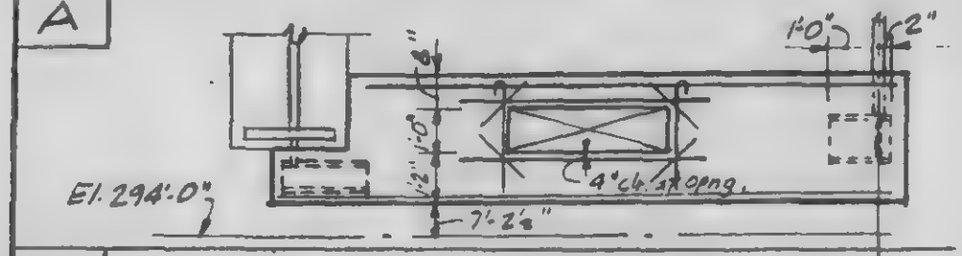

B

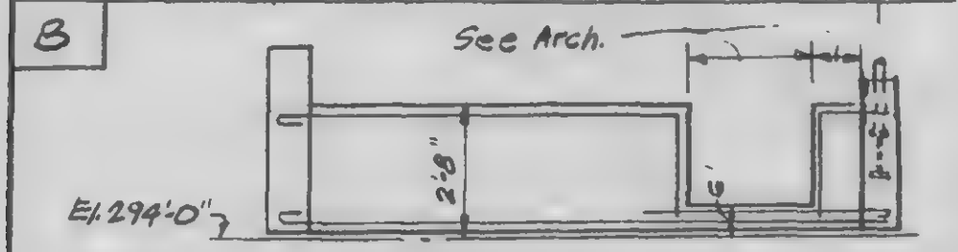

F

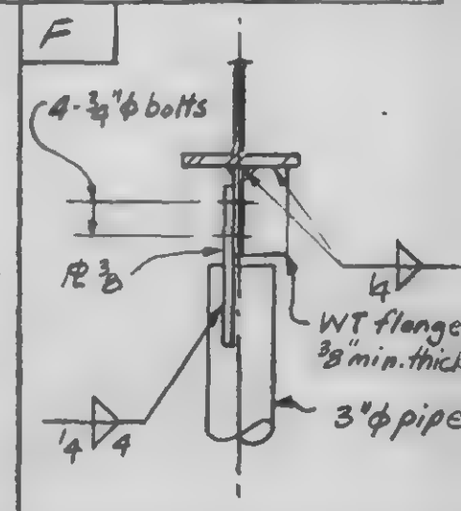

C

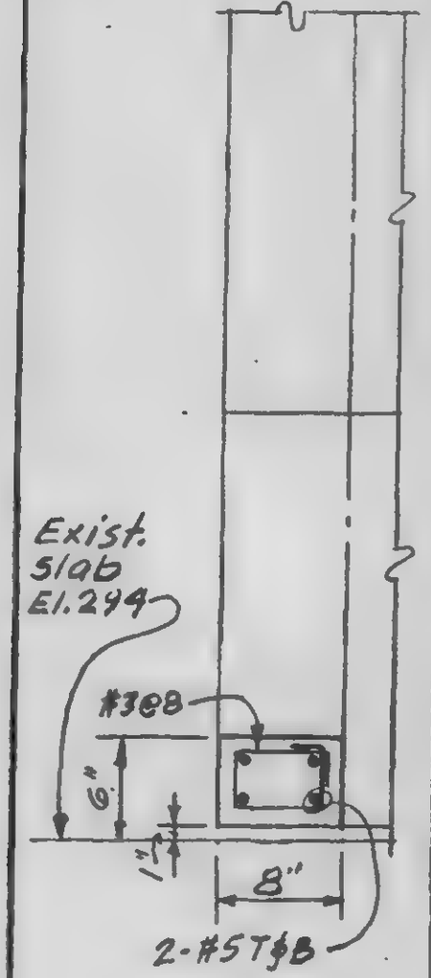

D

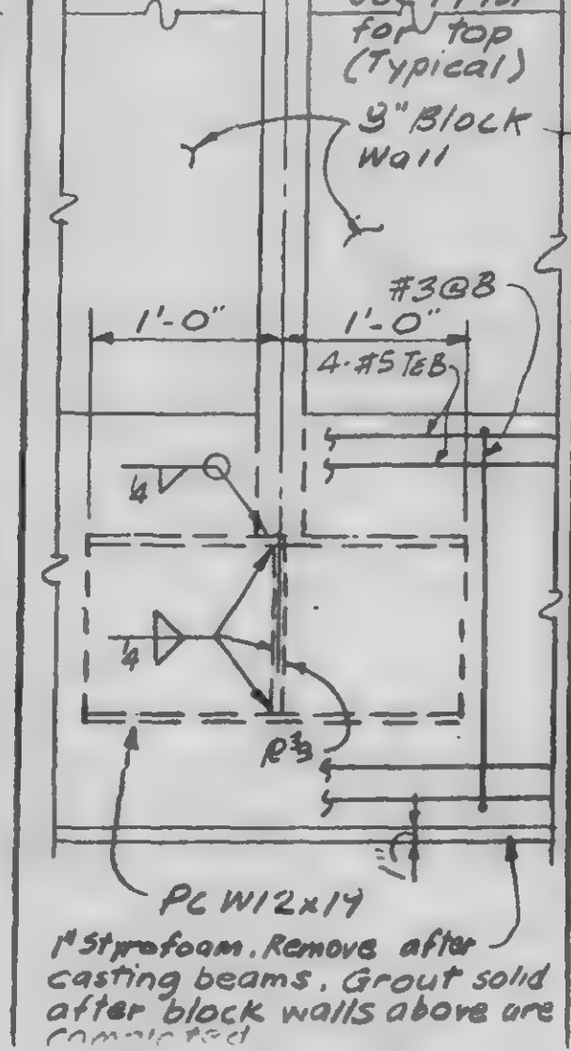

E

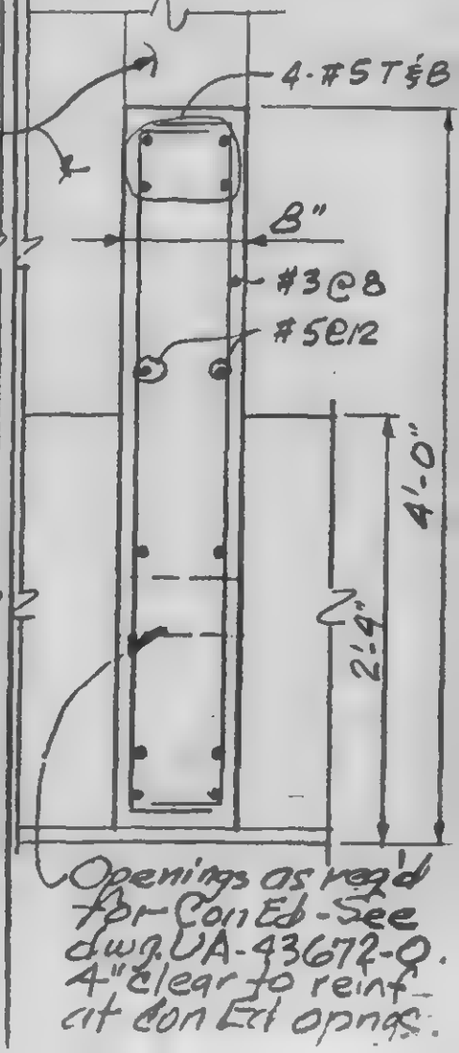

REVISIONS
10/5/79

SKILLING, HELLE, CHRISTIANSEN, ROBERTSON
CONSULTING STRUCTURAL AND CIVIL ENGINEERS

DRAWING NO. 13-K19-15.6

PROJECT NTC - HOTEL - SUPPORT REV | PROJECT NO 701.238 | BY WAB

DATE 9/7/79

TRANSFORMER AREA - SECTIONS 307 - 310

F

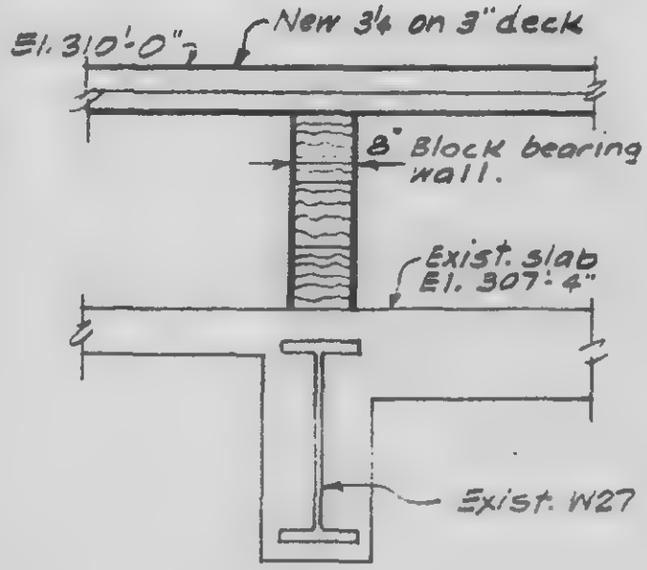

G

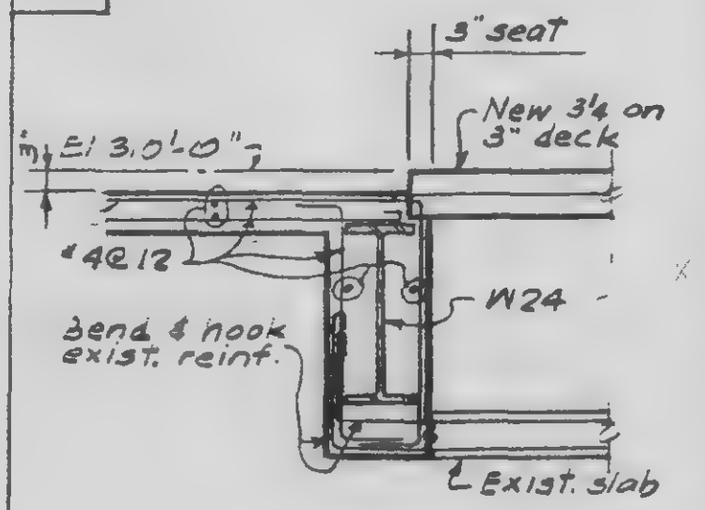

H

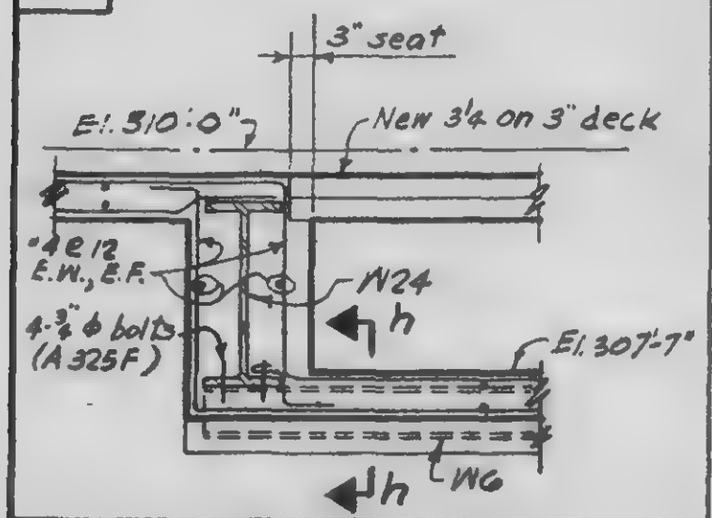

h

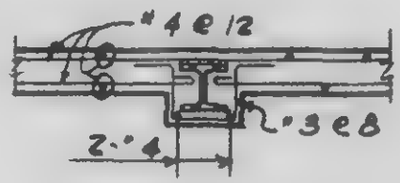

J

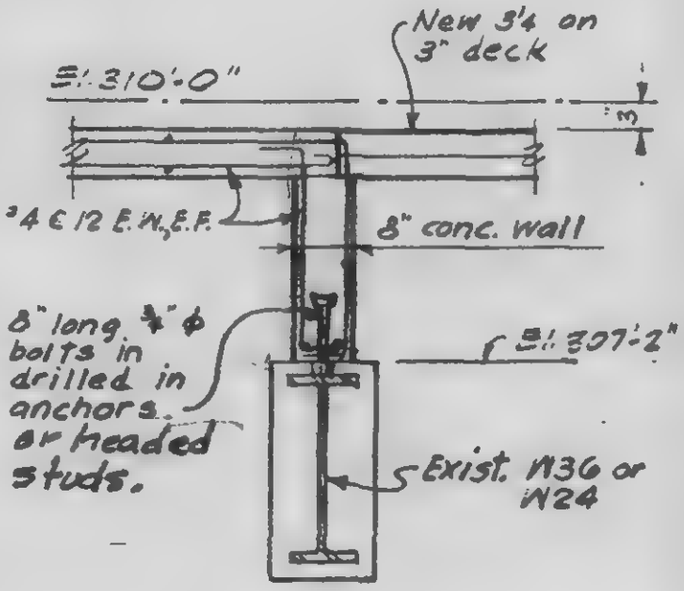

REVISIONS 10/5/79

SKILLING, HELLE, CHRISTIANSEN, ROBERTSON
CONSULTING STRUCTURAL AND CIVIL ENGINEERS

DRAWING NO 13-K19-15.7

PROJECT NTC - HOTEL SUPPORT REV. | PROJECT NO 701.238 | BY NAB

DATE 9/7/79

TRANSFORMER AREA - SECTIONS 307-310

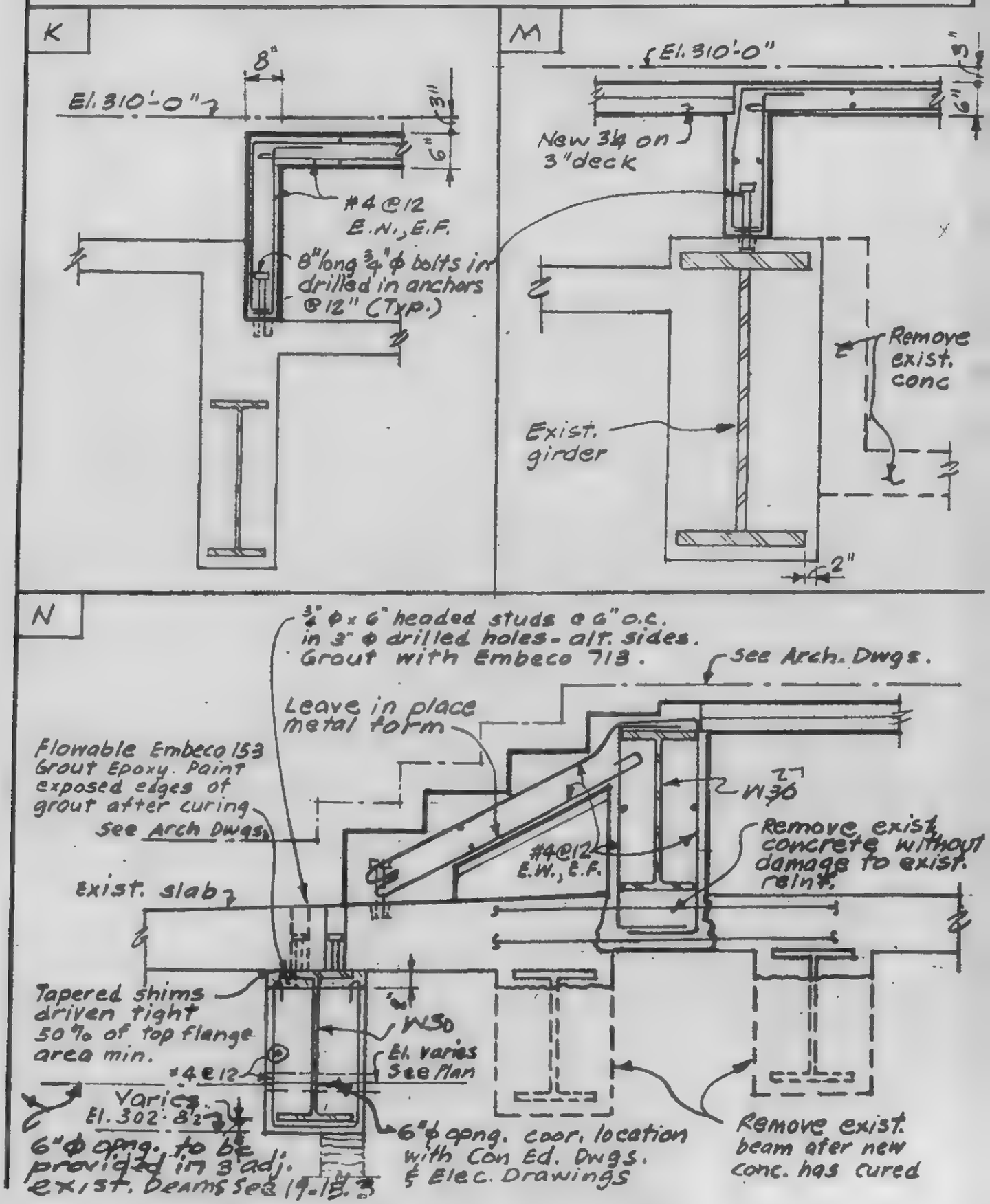

REVISIONS
10/5/79

SKILLING, HELLE, CHRISTIANSEN, ROBERTSON
CONSULTING STRUCTURAL AND CIVIL ENGINEERS

DRAWING NO. 13-K19-15.8

PROJECT NTC - 40TE - SUPPORT REV. | PROJECT NO. 701.238 | BY WAB

DATE 9/7/79

TRANSFORMER AREA - SECTIONS 307-310

P

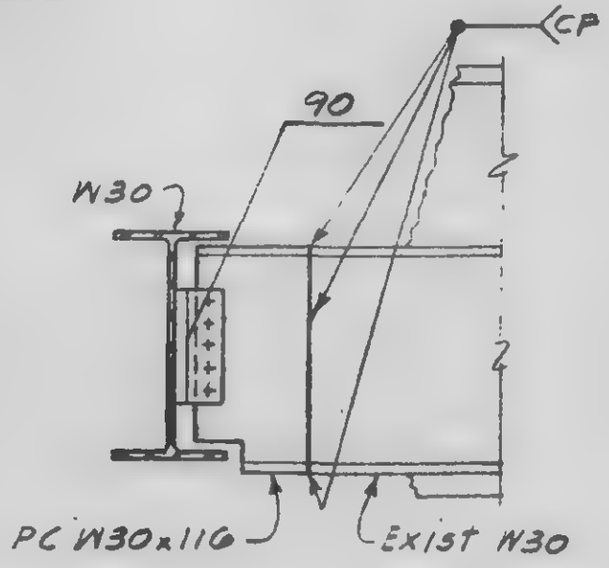

Q

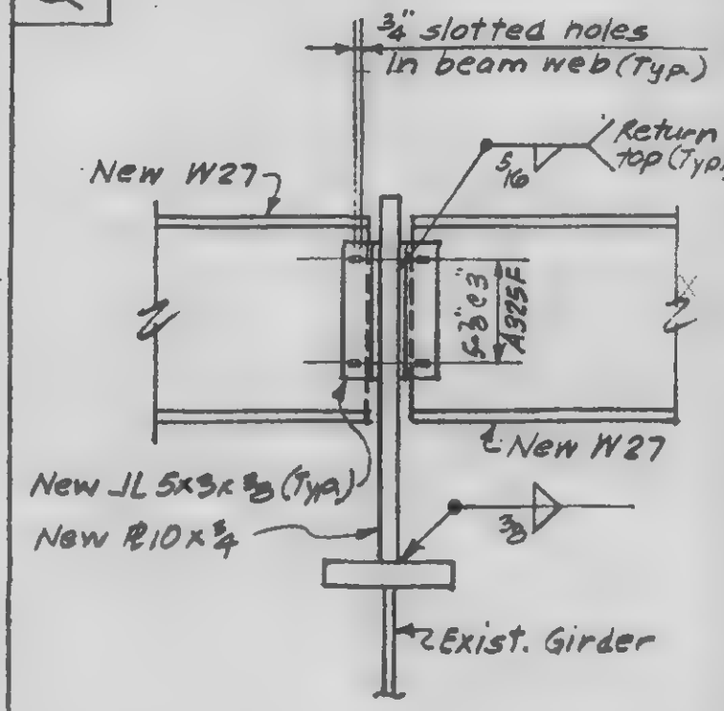

REVISIONS
For coor. 4-6-79
Gen Rev. 3-12-79

SKILLING, HELLE, CHRISTIANSEN, ROBERTSON
CONSULTING STRUCTURAL AND CIVIL ENGINEERS

DRAWING NO. 13-K19 16

PROJECT WTC-1978 HOTEL SUPPORT REV. | PROJECT NO. 701-283 | BY

DATE 3-12-79

EL. 294 - REFRIGERATION MACH. SUPPORTS

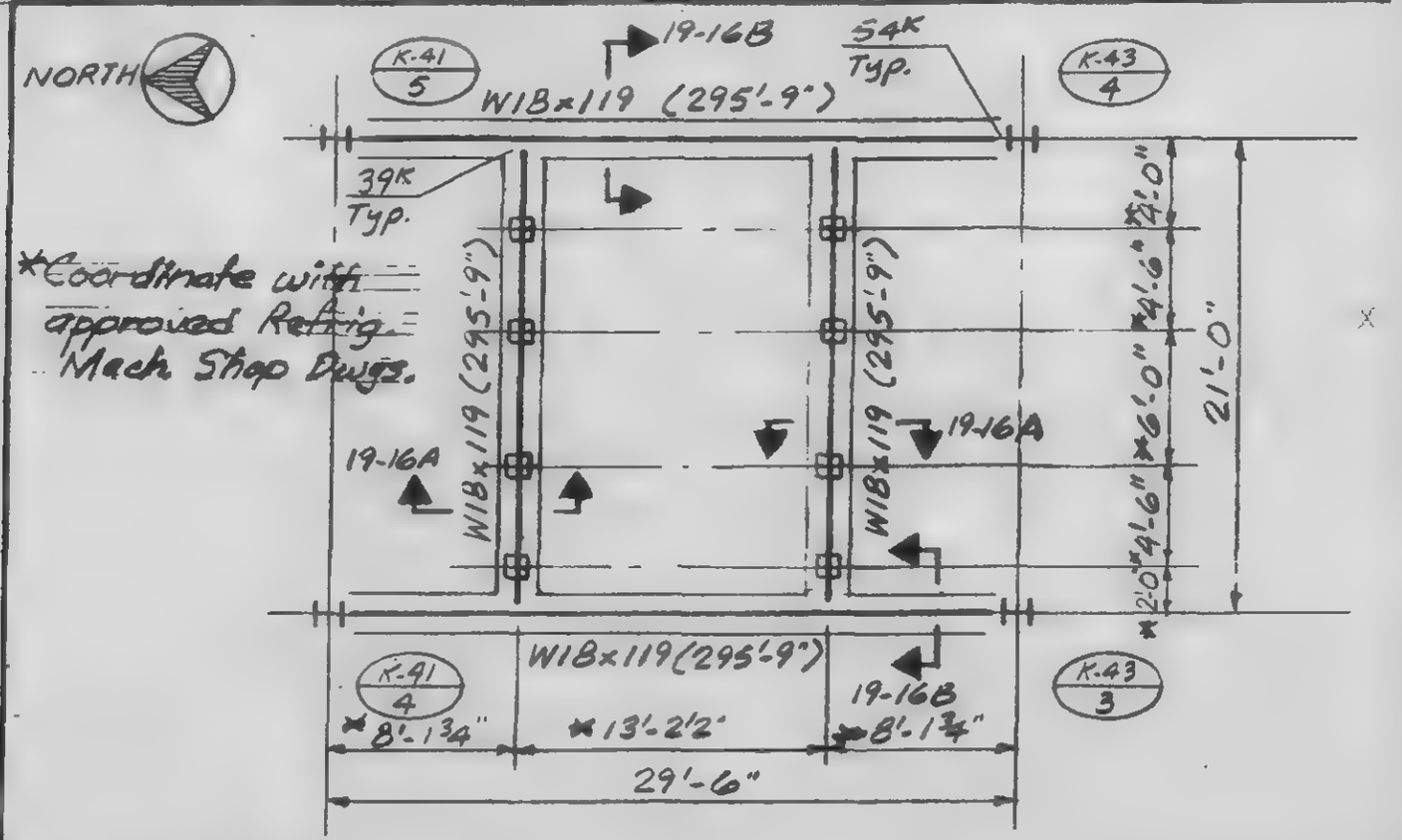

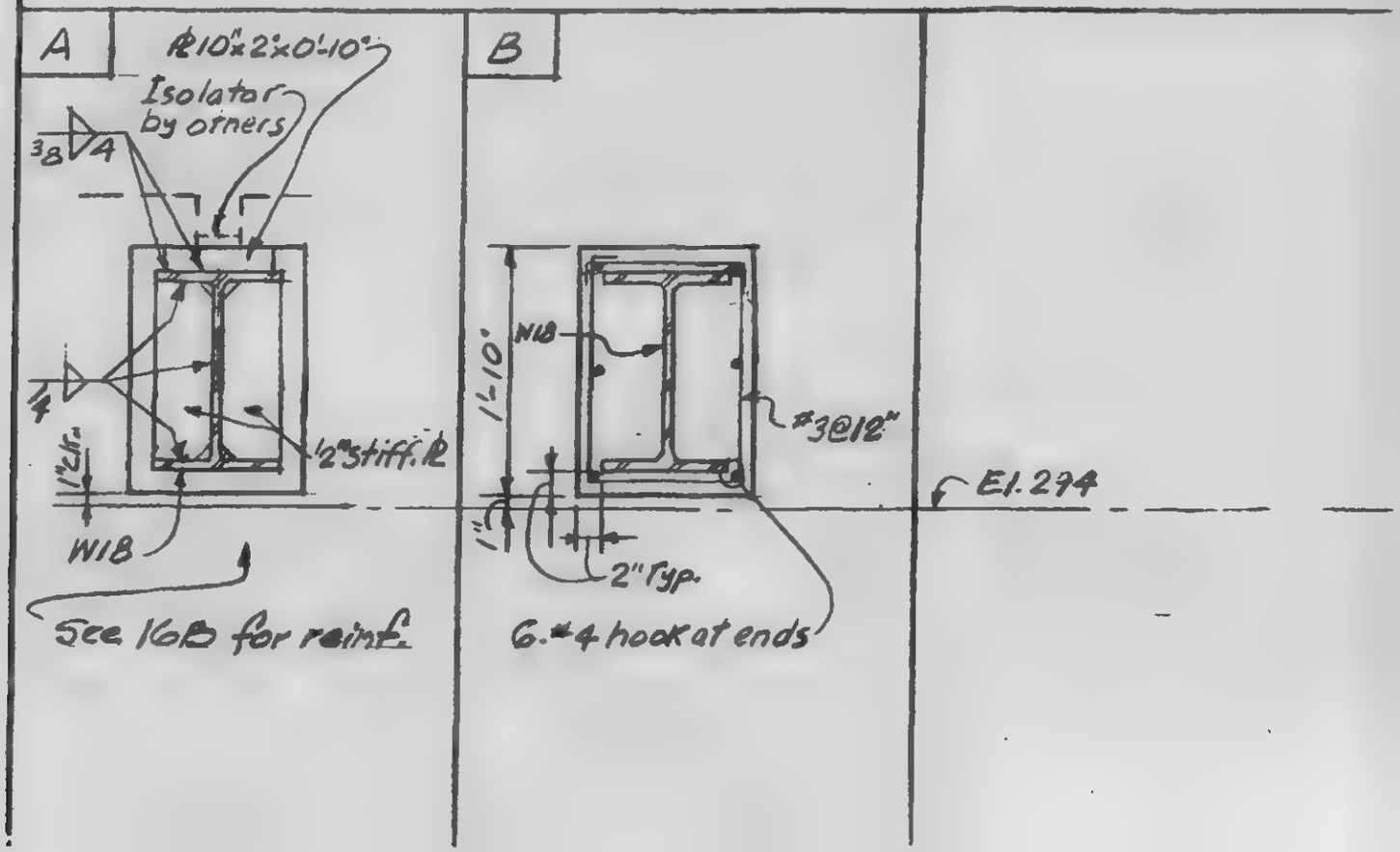

REVISIONS

SKILLING, HELLE, CHRISTIANSEN, ROBERTSON
CONSULTING STRUCTURAL AND CIVIL ENGINEERS

DRAWING NO. 13-K19 17

PROJECT WTC-1978 HOTEL SUPPORT REV. | PROJECT NO. 701.283 | BY WAB

DATE 3.12.79

REINFORCING AT NEW OPENINGS EL. 332

PLAN

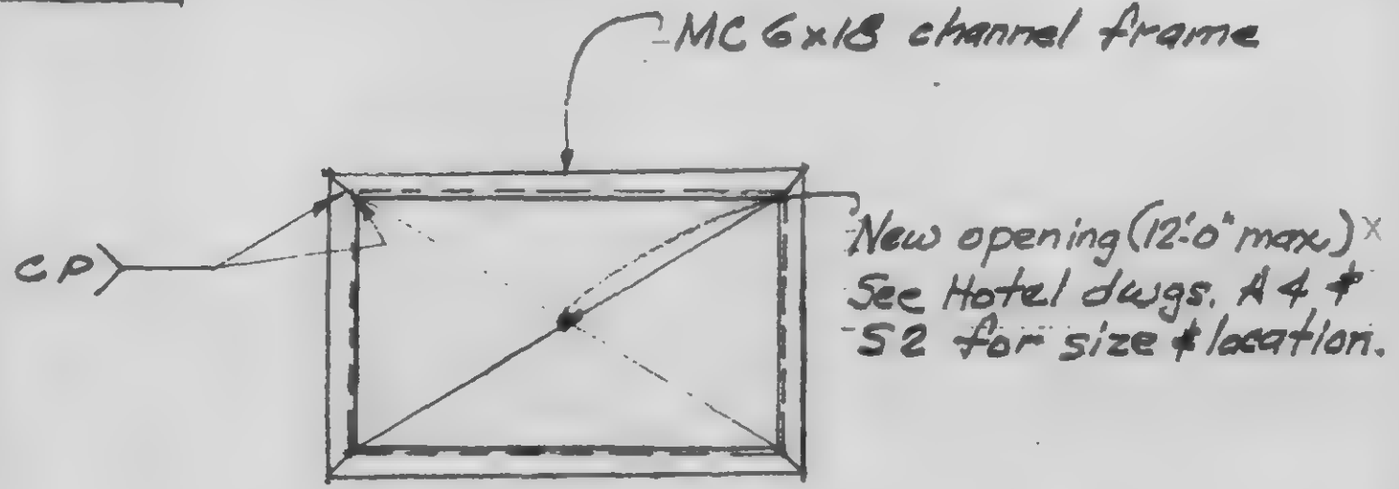

TYP. SECTION

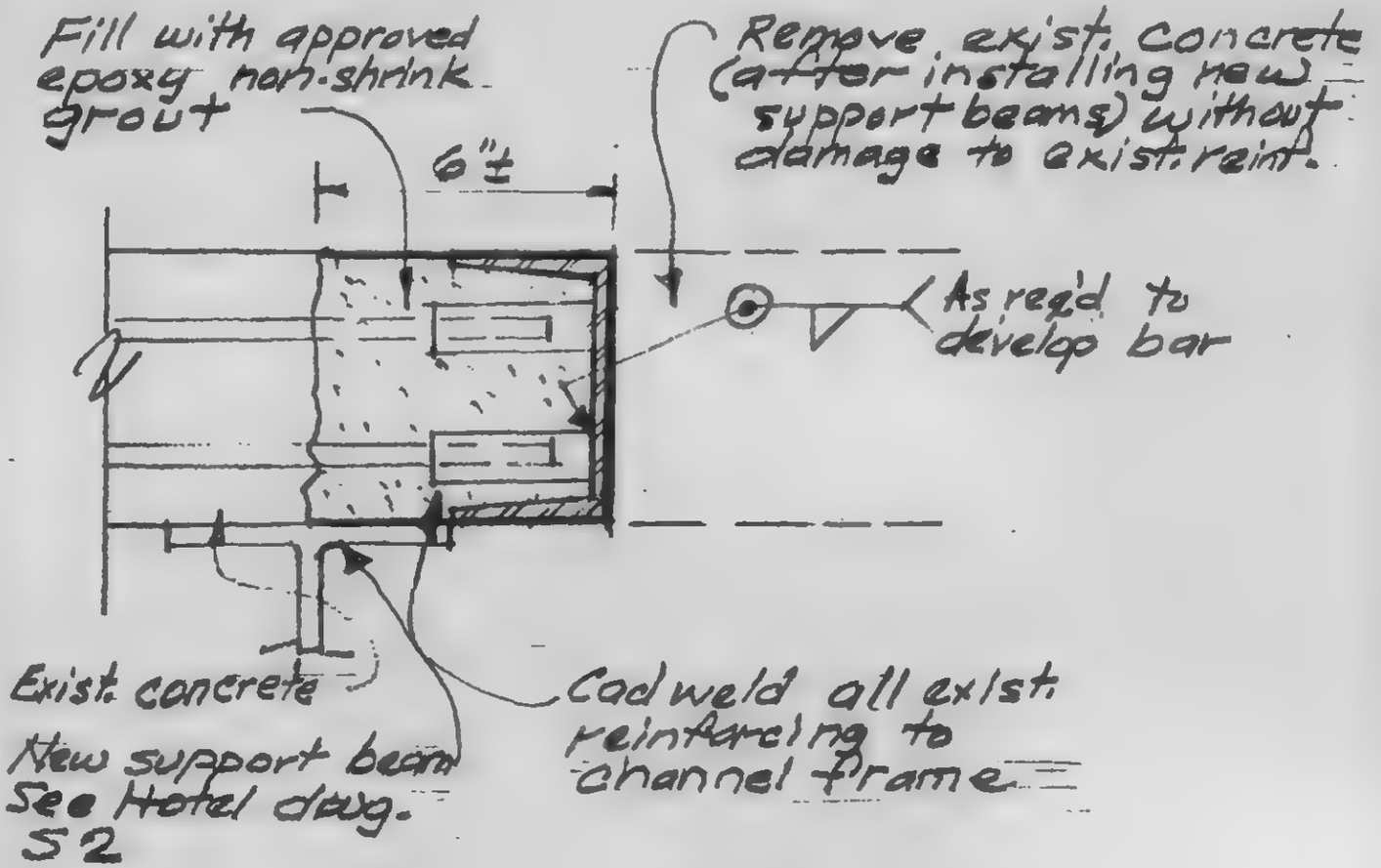

VISIONS

SKILLING, HELLE, CHRISTIANSEN, ROBERTSON
CONSULTING STRUCTURAL AND CIVIL ENGINEERS

DRAWING NO 13-K19 17 ALT.

PROJECT WTC - 1978 HOTEL SUPPORT REV. | PROJECT NO. 101.283 | BY WAB

REINFORCING AT NEW OPENINGS EL. 332

DATE 4/6/77

PLAN

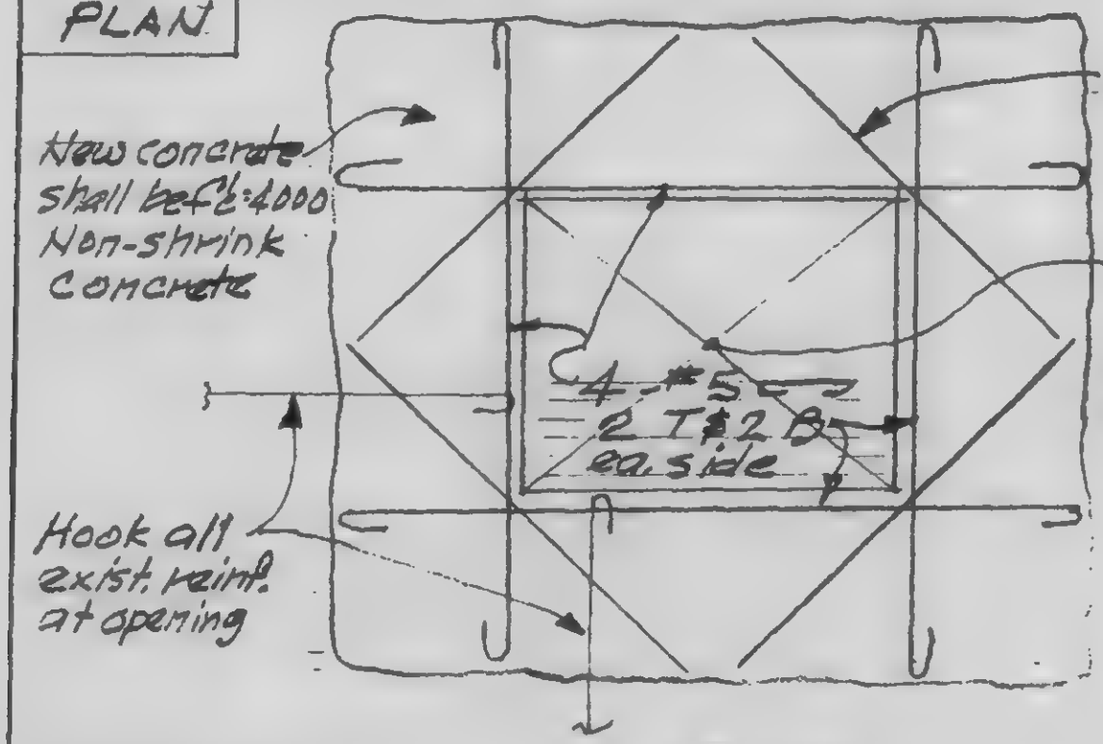

SECTION

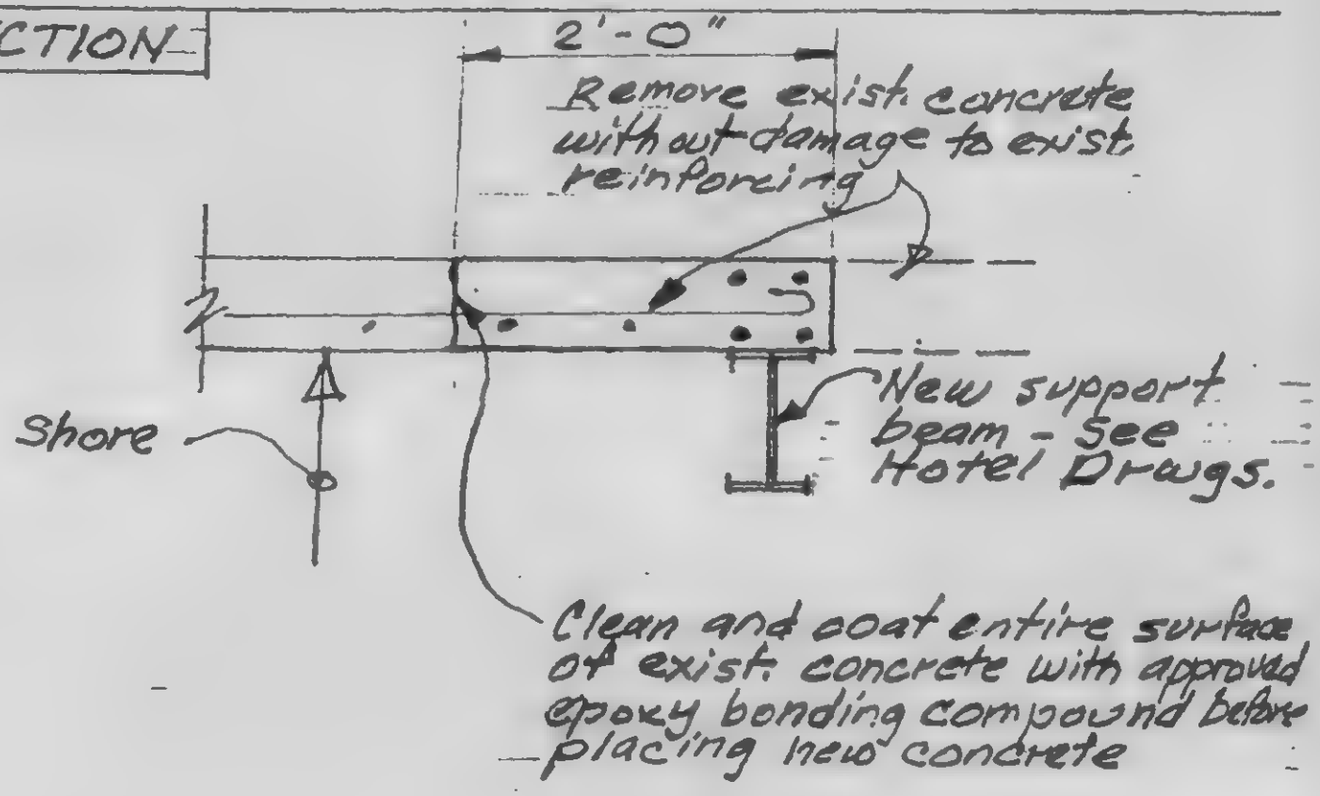

REVISIONS
11-15 79

SKILLING, HELLE, CHRISTIANSEN, ROBERTSON
CONSULTING STRUCTURAL AND CIVIL ENGINEERS

DRAWING NO. 13-K19 18.1

PROJECT WTC-1978 HOTEL SUPPORT REV. | PROJECT NO. 701-293 | BY

DATE 4/6/7

NEW ELEVATOR SUPPORT-EL. 294 & 310

PLAN EL.310

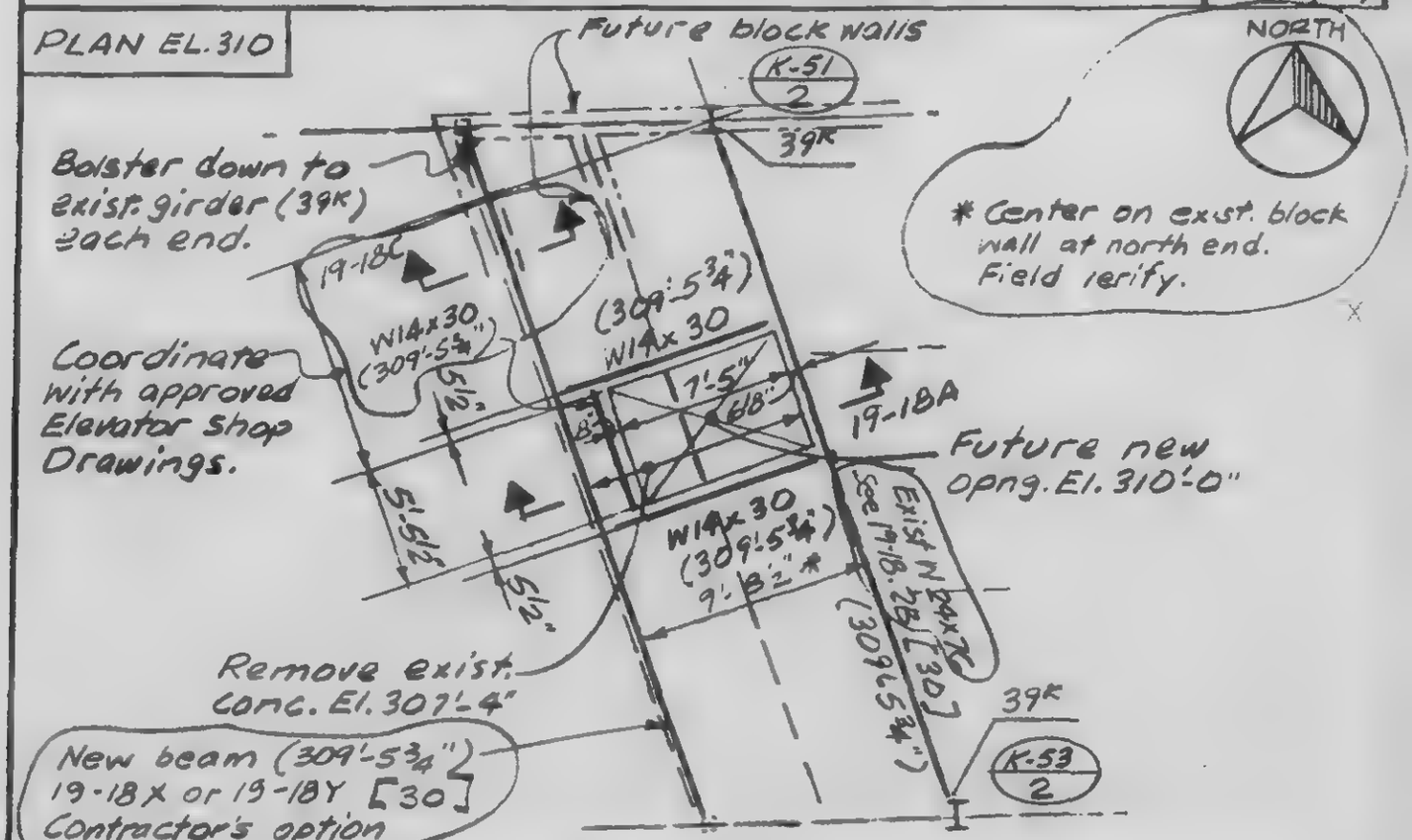

PLAN EL294

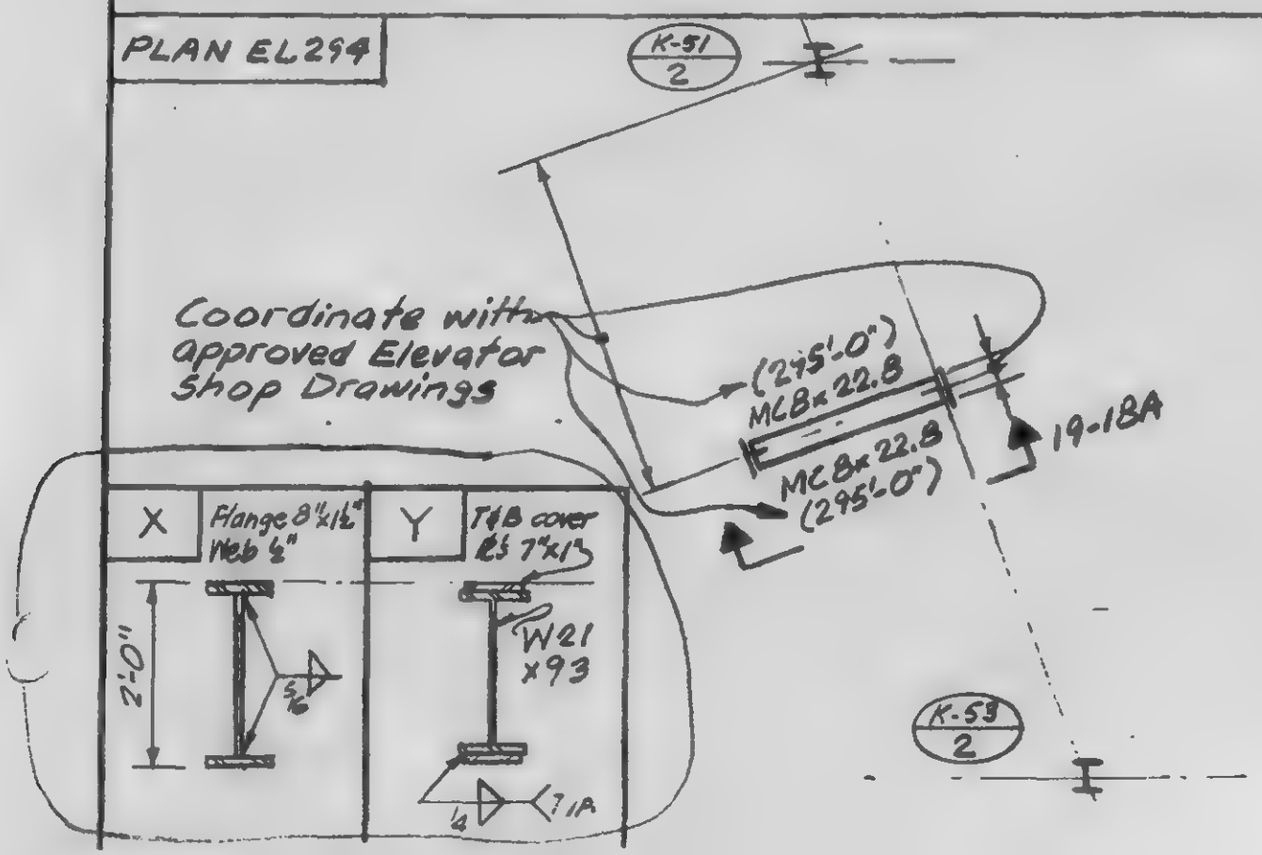

REVISIONS 11-15-79

SKILLING, HELLE, CHRISTIANSEN, ROBERTSON
CONSULTING STRUCTURAL AND CIVIL ENGINEERS

DRAWING NO. 13-K19 18.2

PROJECT WTC-197B HOTEL SUPPORT REV. | PROJECT NO 701-283 | BY

DATE 4/6/79

NEW ELEVATOR SUPPORT-EL. 294 & 310

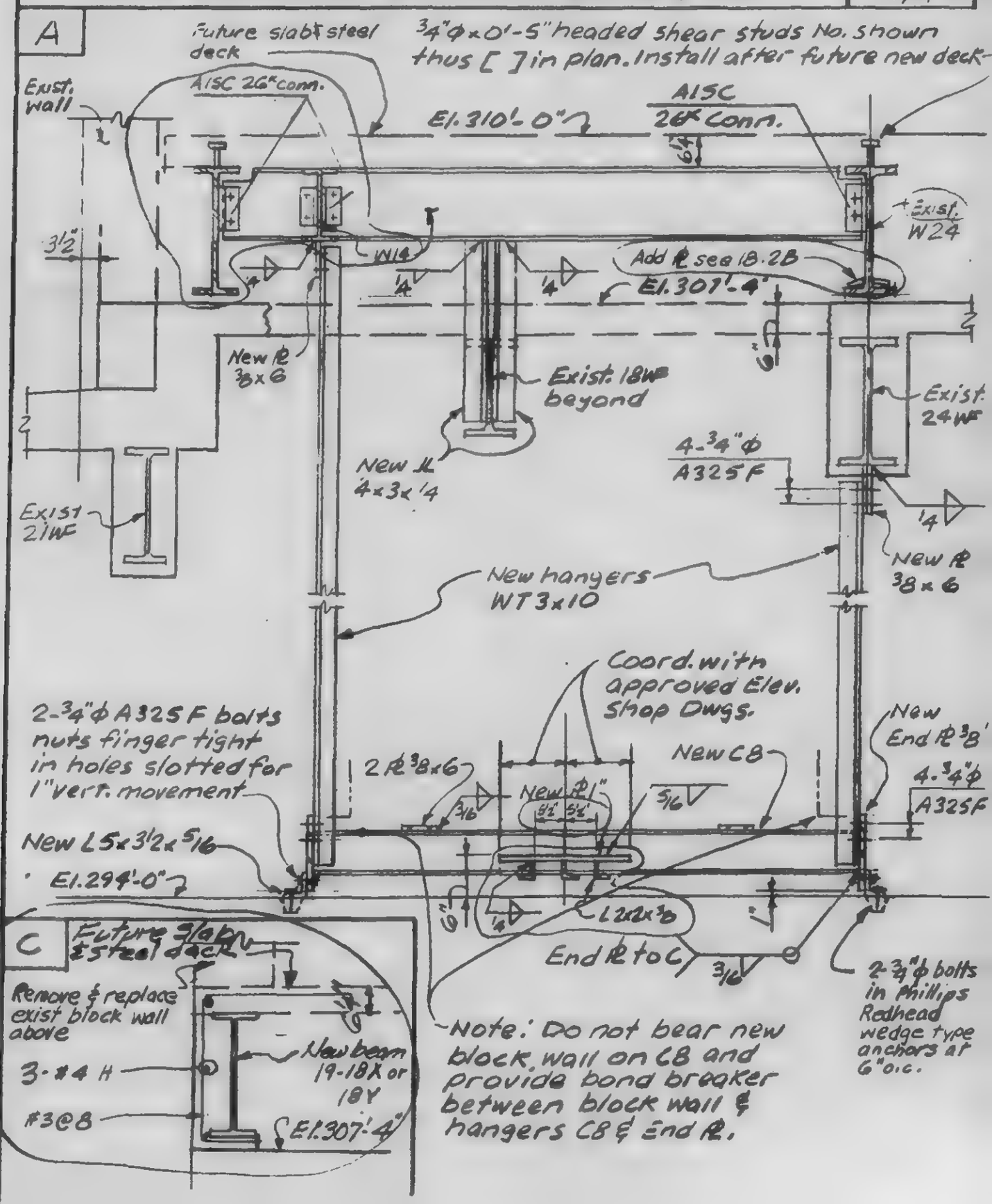

HELLE CHRISTIANSEN ROBERTSON Structural & Civil Engineers	PROJECT WTC - HOTEL	DATE 10/17/79	Sheet No.
	ALT. W24x94 13-K19-18.1	PREPARED BY WdB	13-K19 18.2B
		APPROVED	

Rev. 11/15/79

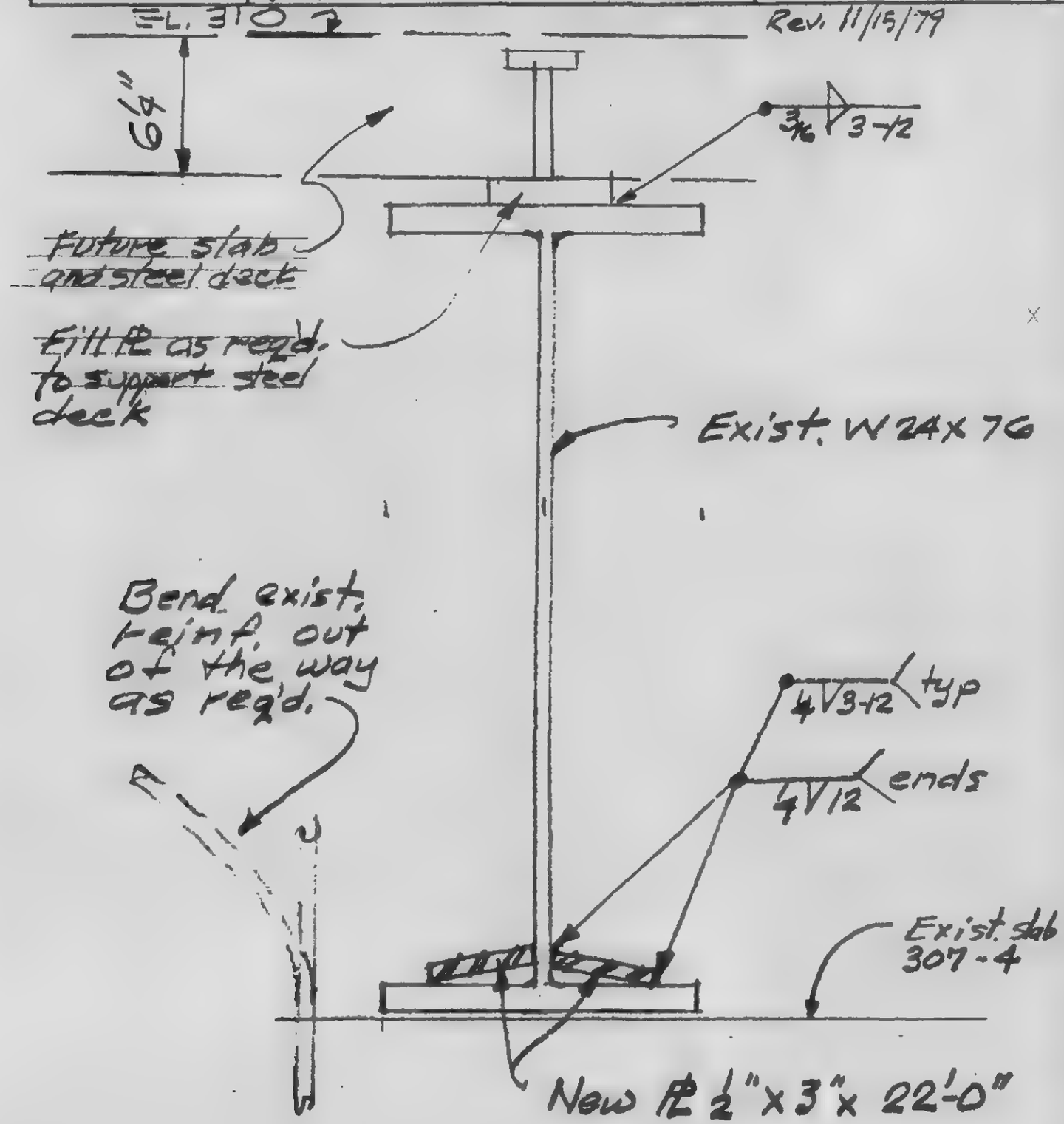

REVISIONS

IN PROGRESS 4/25/79

SKILLING, HELLE, CHRISTIANSEN, ROBERTSON
CONSULTING STRUCTURAL AND CIVIL ENGINEERS

DRAWING NO. 13-K19 · 19

PROJECT WTC-1978 HOTEL SUPPORT REV. | PROJECT NO. 701.283 | BY WAB | DATE 7/1/79

HORIZONTAL ANCHOR-COL. HP-1

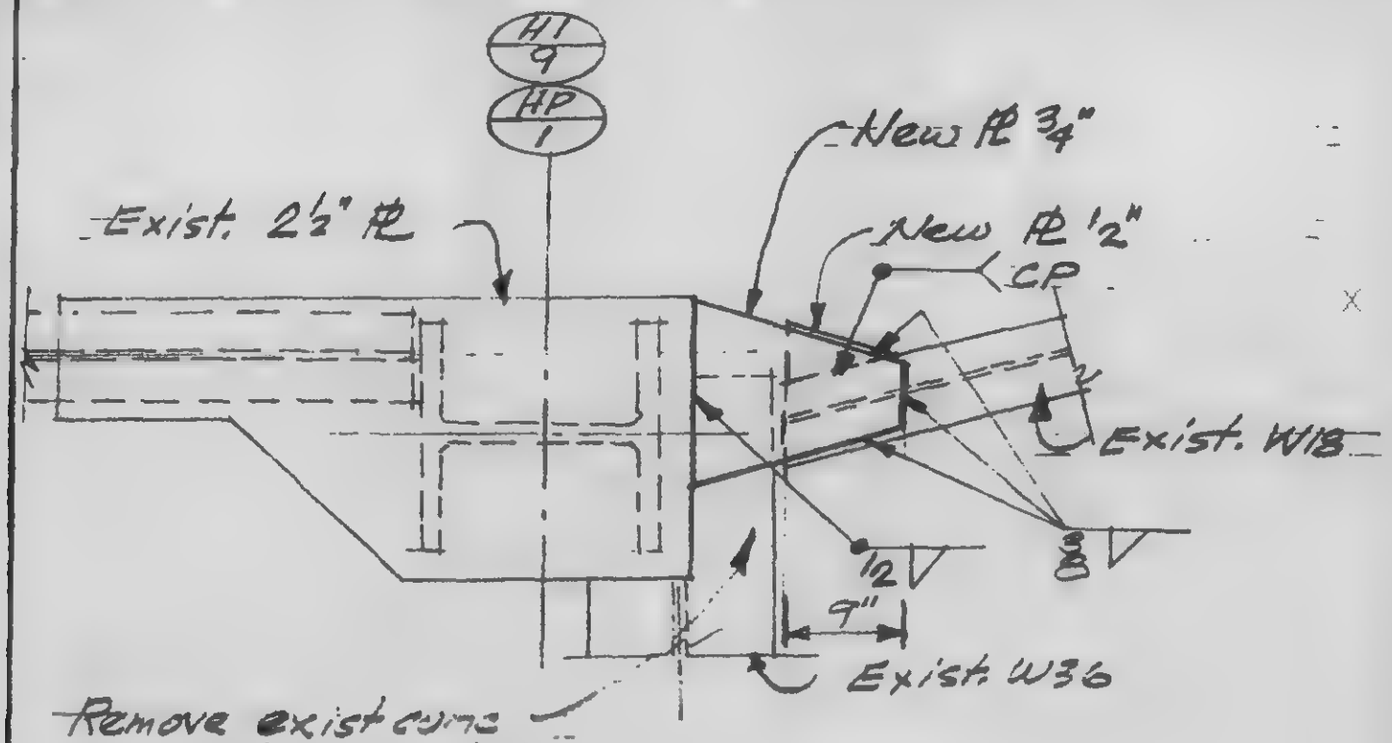

Remove exist conc as req'd to install new PL.

REVISIONS	SKILLING, HELLE, CHRISTIANSEN, ROBERTSON CONSULTING STRUCTURAL AND CIVIL ENGINEERS			DRAWING NO 13-K:9 20.1
	PROJECT WTC-1978 HOTEL-SUPPORT REV.	PROJECT NO 701.283	BY WAB	
	ELEVATOR BUFFER BEAMS			DATE 5-31-79

PLAN EL.294

PART SK-87

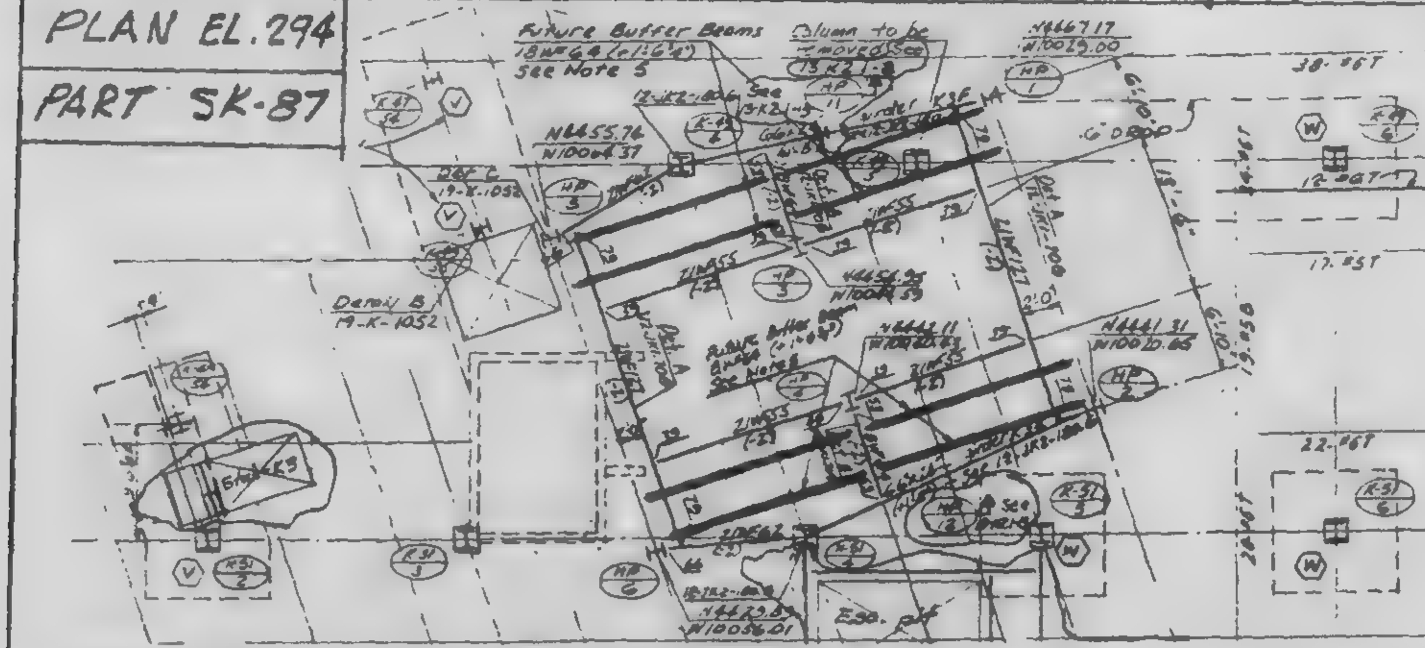

Note: 8 - Future Buffer Beams 18WF64 are now required. Provide W18×65 (+1'-6⅞") length and location in accordance with Approved Elevator shop Dwgs. See 19.20.2 (12.JK1-706) for details of existing supports

PLAN EL.284

PART SK-73

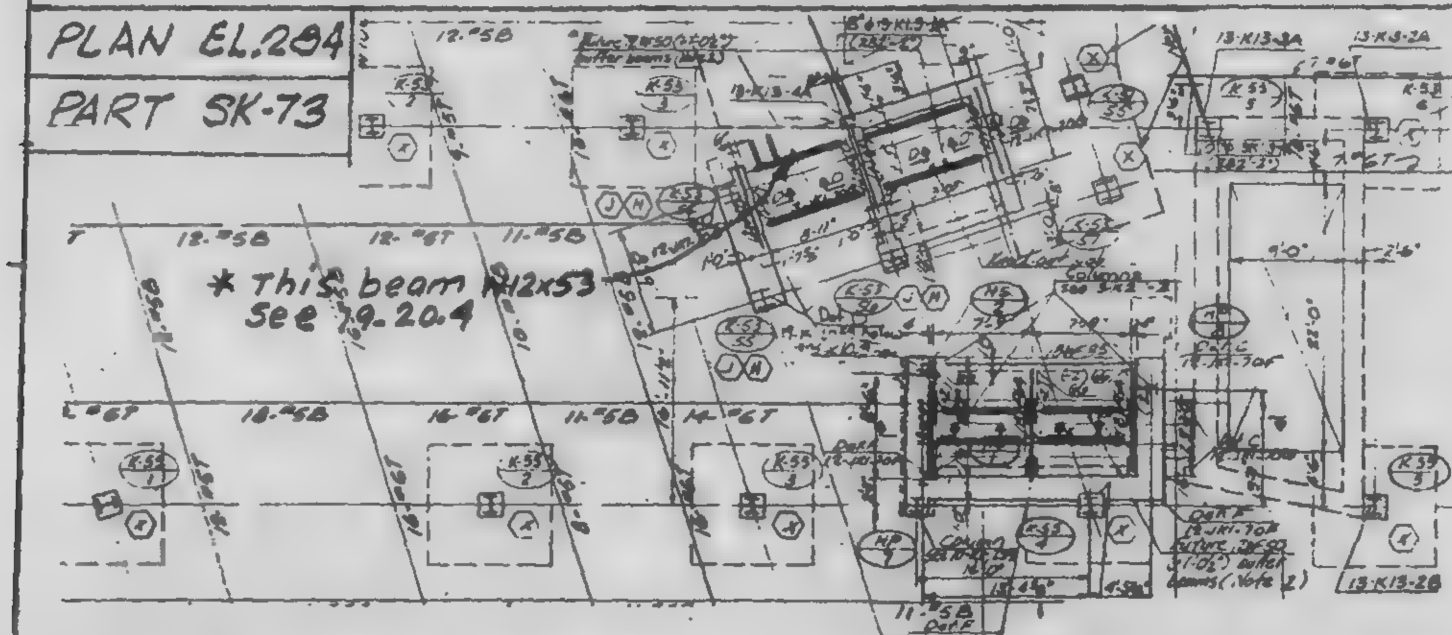

Note: 8-Future Buffer Beams 12WF50 are now required. Provide W12×50 (+1'-0⅝") length and location in accordance with* Approved Elevator shop Dwgs. Same for 2 - Elevator Machine Beam shown on 19-20.4. See 19-20.3 (8-JK8-63.5) for plan of South Elevators and 19-20.2 (12-JK1-706) for support details. See 19-20.4 (8-JK8-63.10) for plan of North Elevators and 19-20.5 (8-JK8-11) for support details.

SKILLING, HELLE, CHRISTIANSEN, ROBERTSON
CONSULTING STRUCTURAL AND CIVIL ENGINEERS

PROJECT WTC-197B HOTEL-SUPPORT REV. | PROJECT NO. 701.283 | BY [illegible]

DRAWING NO. 13-K19 20.2

ELEVATOR BUFFER BEAMS

DATE 5-31-79

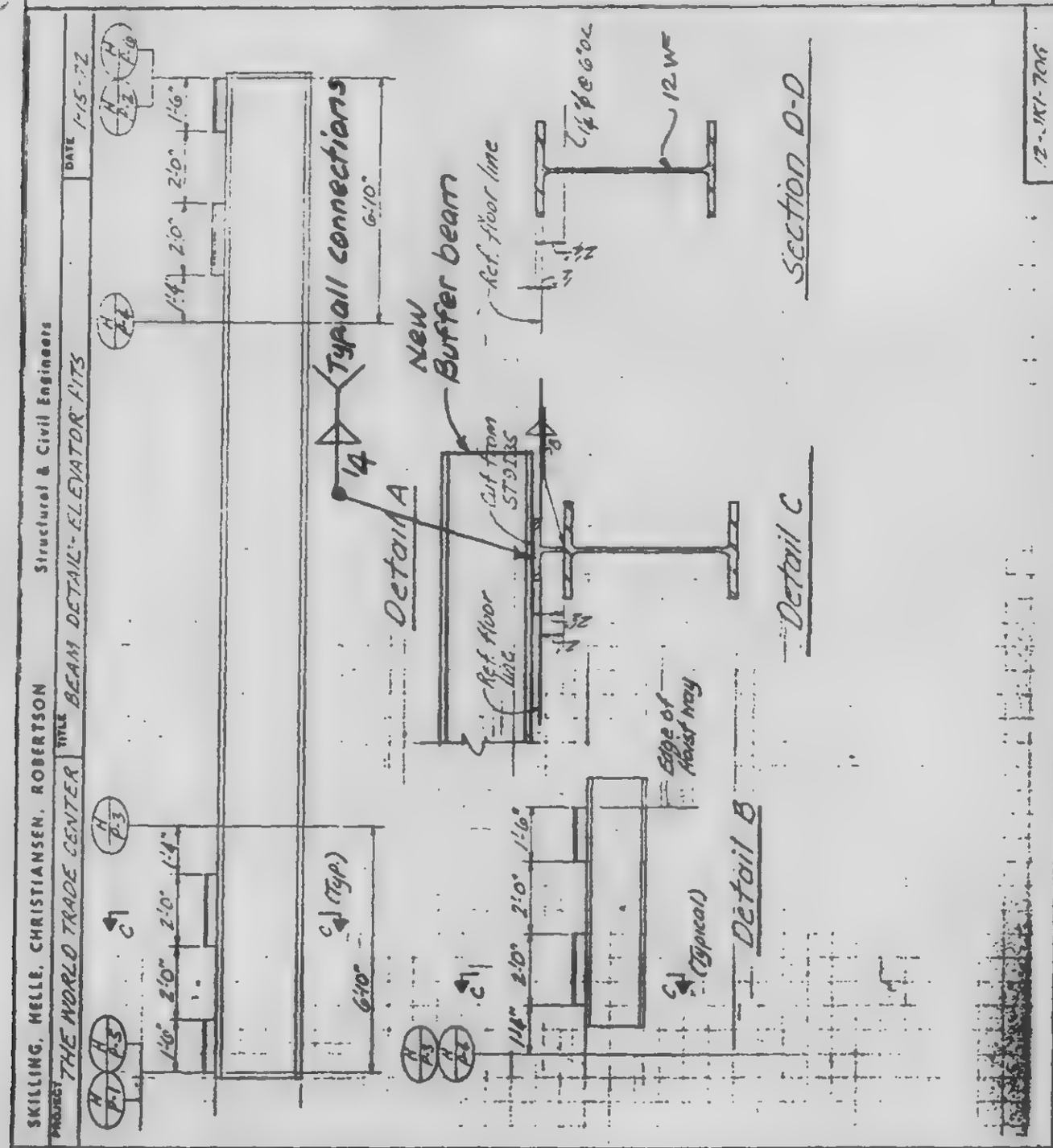

SKILLING, HELLE, CHRISTIANSEN, ROBERTSON
CONSULTING STRUCTURAL AND CIVIL ENGINEERS

DRAWING NO. 13-K19 20.3

PROJECT WTC-1978 HOTEL-SUPPORT REV. | PROJECT NO. 701.283

DATE 5-31-79

ELEVATOR BUFFER BEAMS

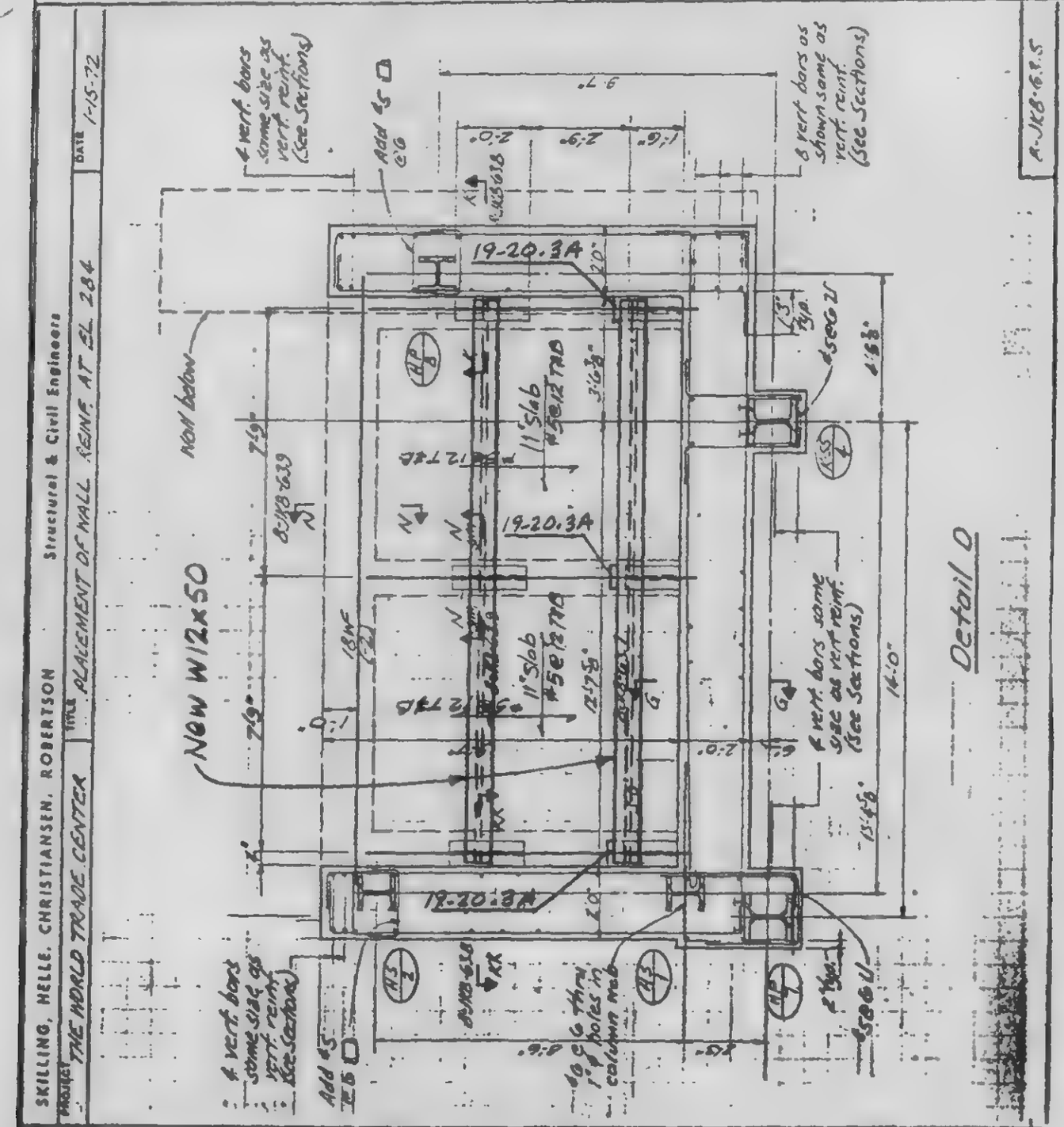

Structural & Civil Engineers
DATE 1-15-72
PLACEMENT OF WALL REINF. AT EL 284
SKILLING, HELLE, CHRISTIANSEN, ROBERTSON
PROJECT THE WORLD TRADE CENTER
TITLE PLACEMENT OF
A-JK8-6.1.5
A

SKILLING, HELLE, CHRISTIANSEN, ROBERTSON
CONSULTING STRUCTURAL AND CIVIL ENGINEERS

PROJECT WTC-1978 HOTEL-SUPPORT REV. | PROJECT NO 701.283 | BY WOF

DRAWING NO 13-K19 20.4

ELEVATOR BUFFER BEAMS

DATE 5-31-79

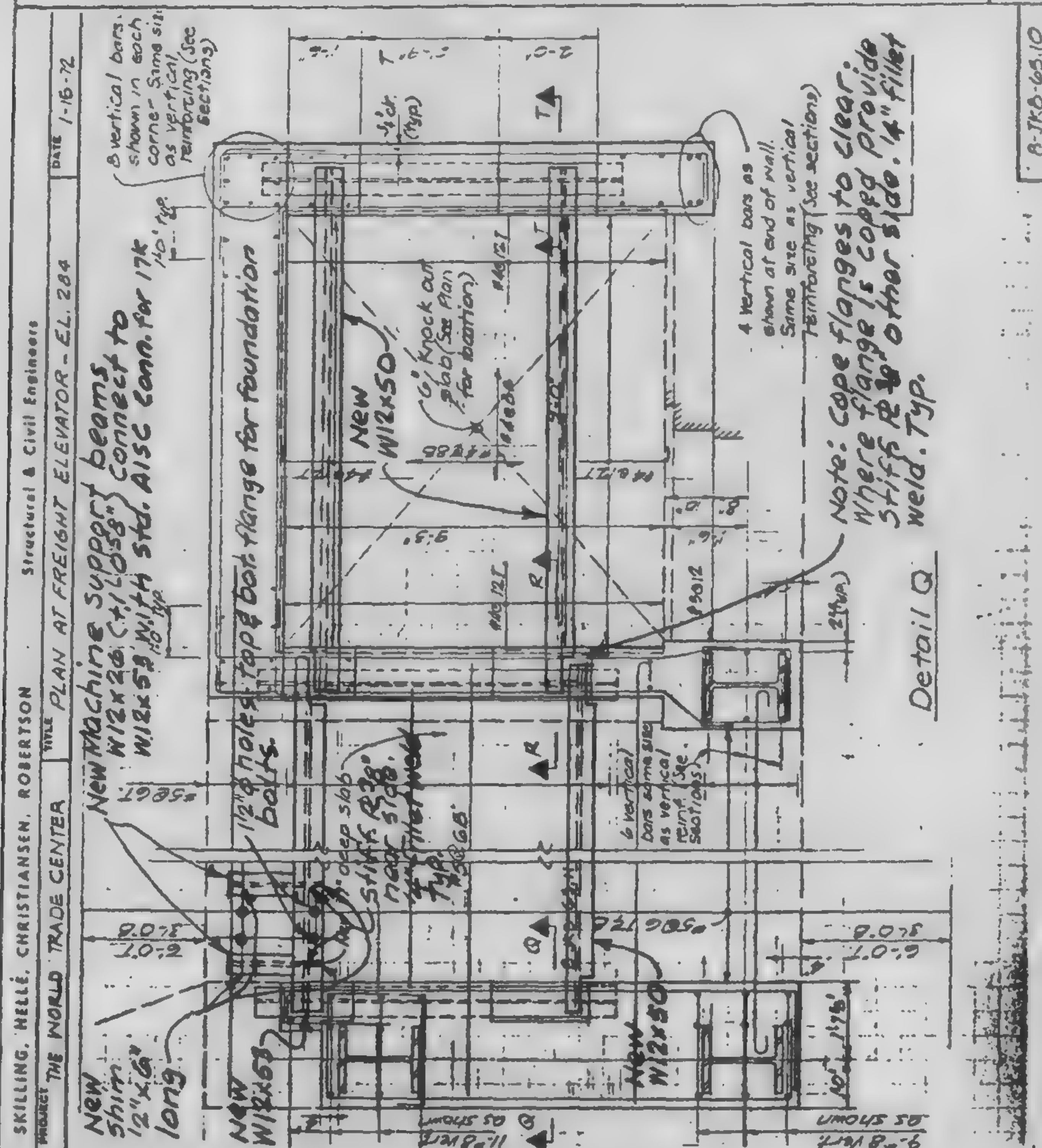

SKILLING, HELLE, CHRISTIANSEN, ROBERTSON
CONSULTING STRUCTURAL AND CIVIL ENGINEERS

PROJECT: WTC-1978 HOTEL-SUPPORT REV. | PROJECT NO. 701.283 | BY WJB

DRAWING NO. 13-K19 20.5

DATE 5-31-79

ELEVATOR BUFFER BEAMS

Structural & Civil Engineers
DATE 1-16-72
SECTIONS AT ELEVATORS
PROJECT THE WORLD TRADE CENTER
TITLE SECTIONS
SKILLING, HELLE, CHRISTIANSEN, ROBERTSON

8-JKB-63.11

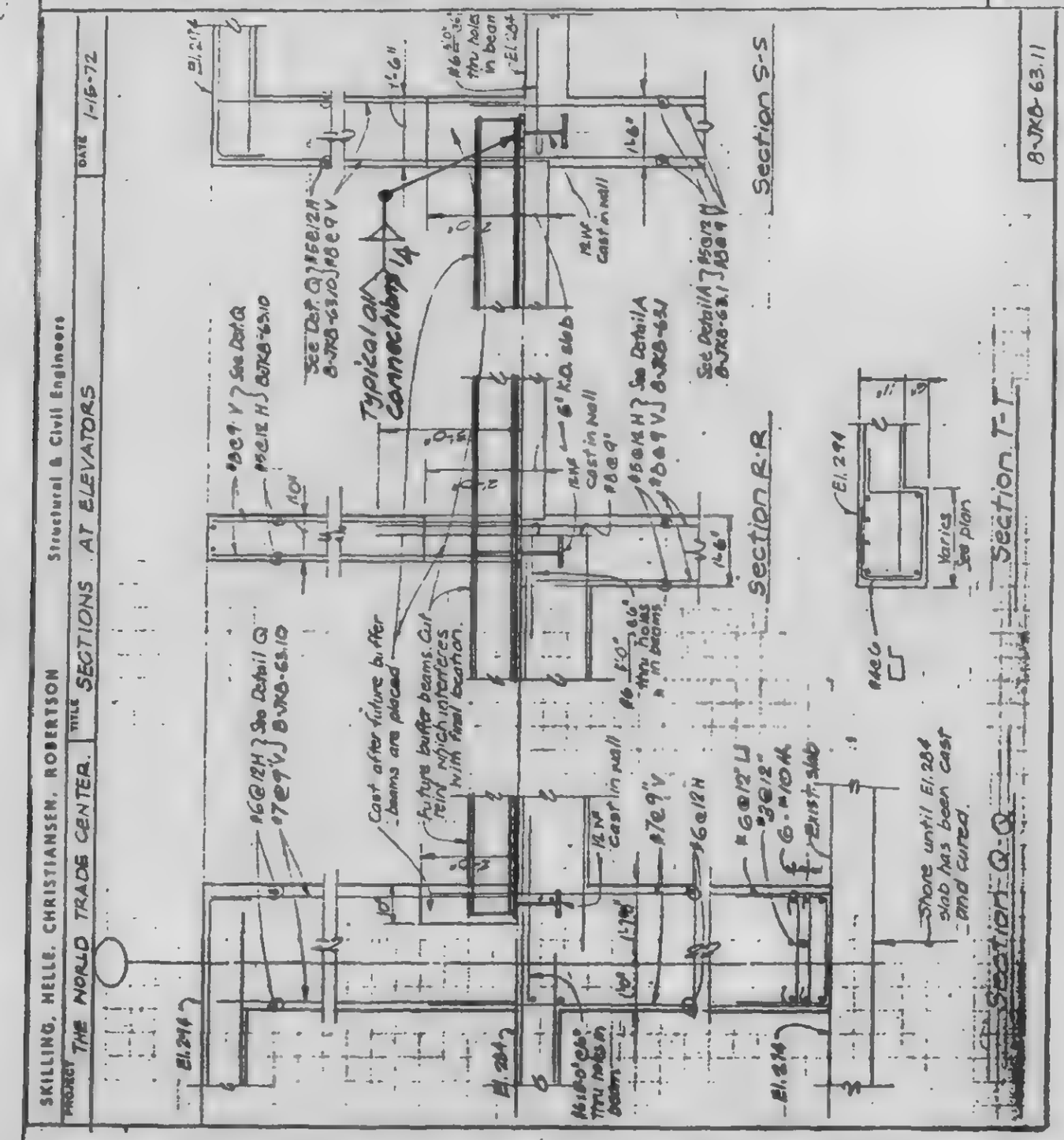

Note: Concrete for placing in wall pockets after installation of buffer beam shall be f'c = 3000 psi stone aggregate non-shrink concrete.

REVISIONS 1/25/80

SKILLING, HELLE, CHRISTIANSEN, ROBERTSON
CONSULTING STRUCTURAL AND CIVIL ENGINEERS

DRAWING NO. 13-K19 21.1

PROJECT WTC-1978 HOTEL - SUPPORT REV. | PROJECT NO 7801-283 | BY WEB

CON. ED - C.I.P. SPLICE CHAMBER

DATE 10/31/79

FRAMING PLAN

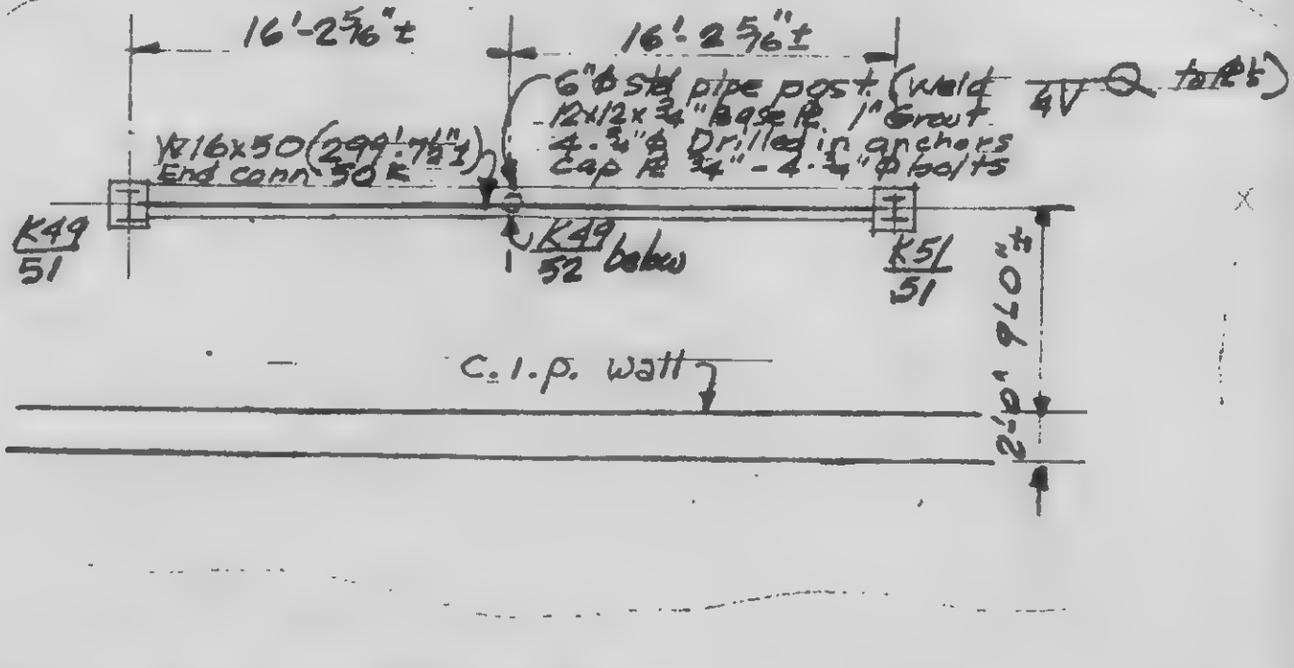

TYPICAL CONDUIT ENCASEMENT DET.

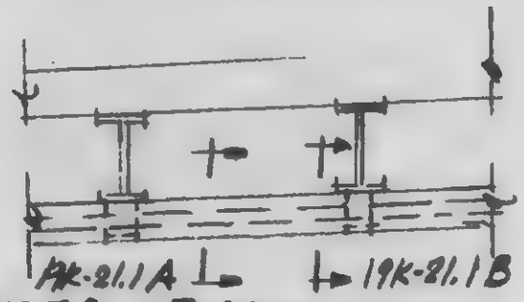

UNDER BEAMS

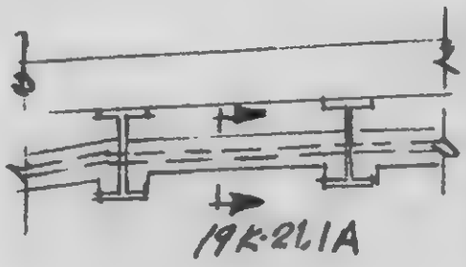

THRU BEAMS

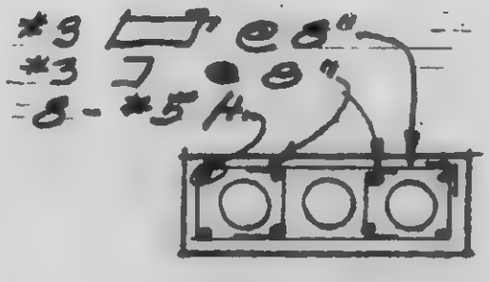

19K-21.1 A

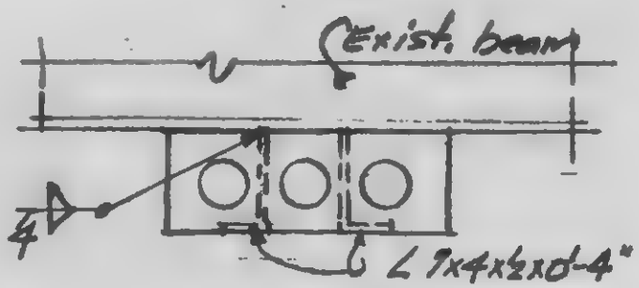

19K-21.1 B

REVISIONS

SKILLING, HELLE, CHRISTIANSEN, ROBERTSON
CONSULTING STRUCTURAL AND CIVIL ENGINEERS

DRAWING NO 13-K19 21.2

PROJECT WTC-1978 HOTEL-SUPPORT REV. | PROJECT NO. 701-283 | BY RBE

DATE 1/25/80

CON ED - C.I.P SPLICE CHAMBER

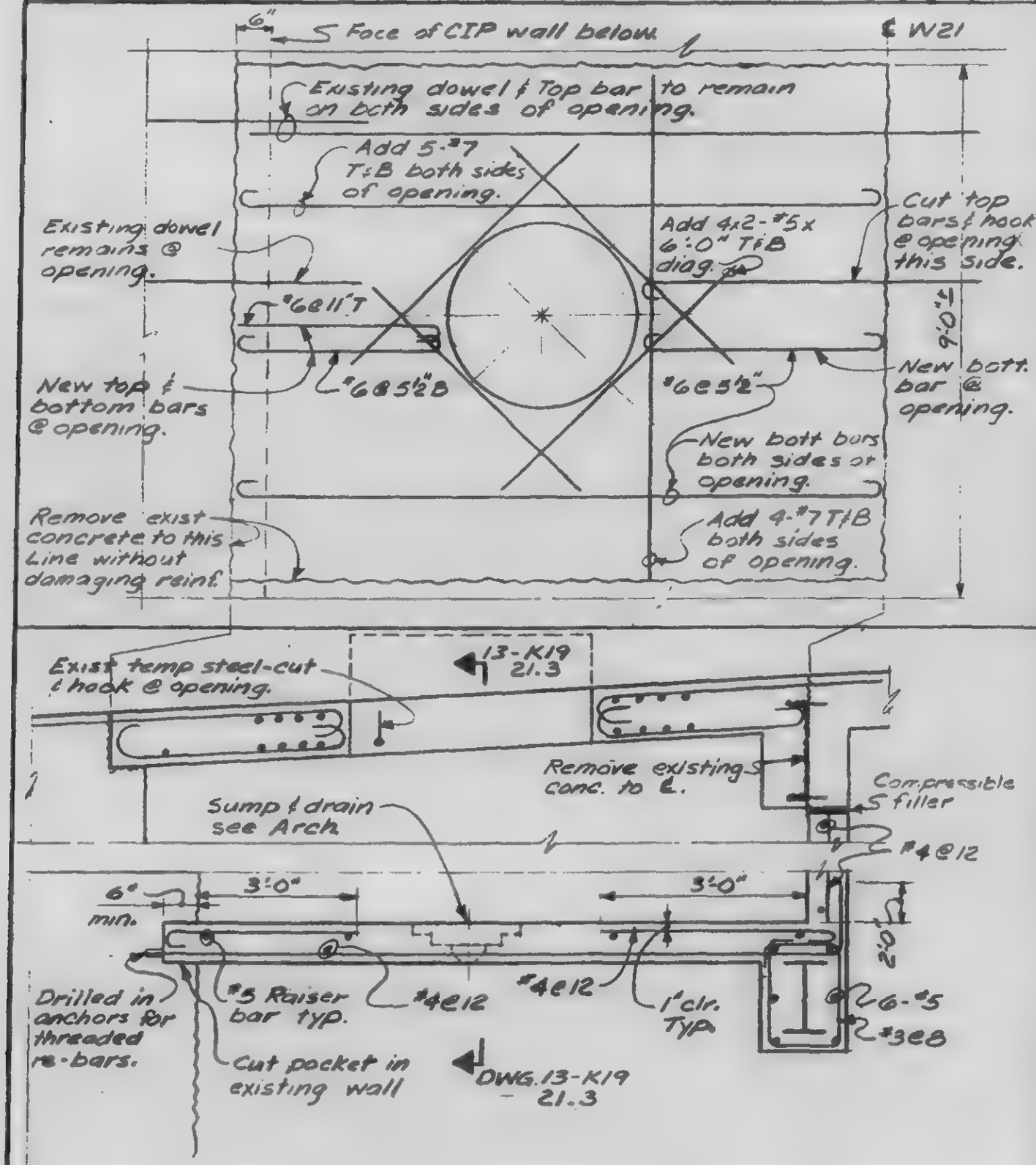

REVISIONS

SKILLING, HELLE, CHRISTIANSEN, ROBERTSON
CONSULTING STRUCTURAL AND CIVIL ENGINEERS

DRAWING NO. 13-K19 21.3

PROJECT WTC - 1978 HOTEL-SUPPORT REV. | PROJECT NO. 701 - 283 | BY KBE

DATE 1/25/80

CON. ED.-C.I.P SPLICE CHAMBER

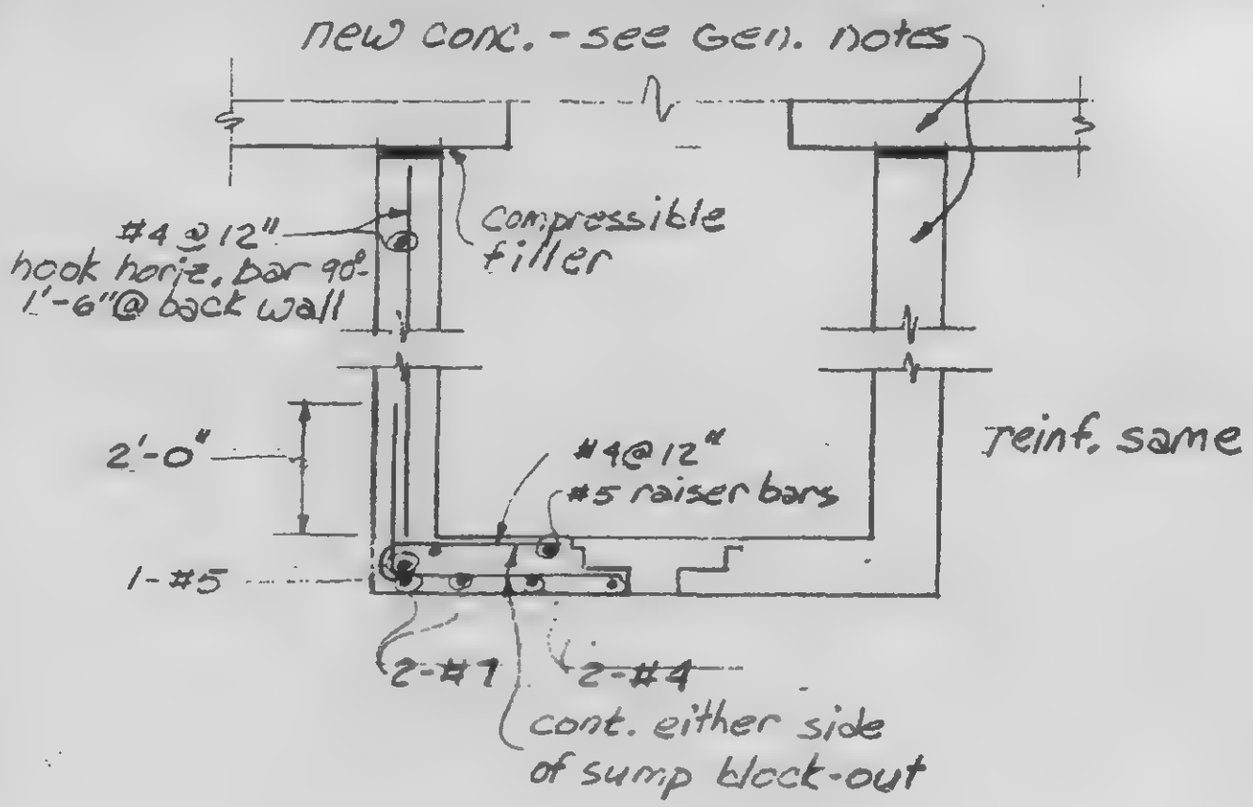

REVISIONS

SKILLING, HELLE, CHRISTIANSEN, ROBERTSON
CONSULTING STRUCTURAL AND CIVIL ENGINEERS

DRAWING NO. SKETCH 332-2

PROJECT WTC-1978 HOTEL SUPPORT REV | PROJECT NO. 701-283 | BY WAB

DATE 4/23/79

EL. 332 SLAB DETAILS

A

Note: Remove existg. concrete without damage to existg. reinforcing - Typical.

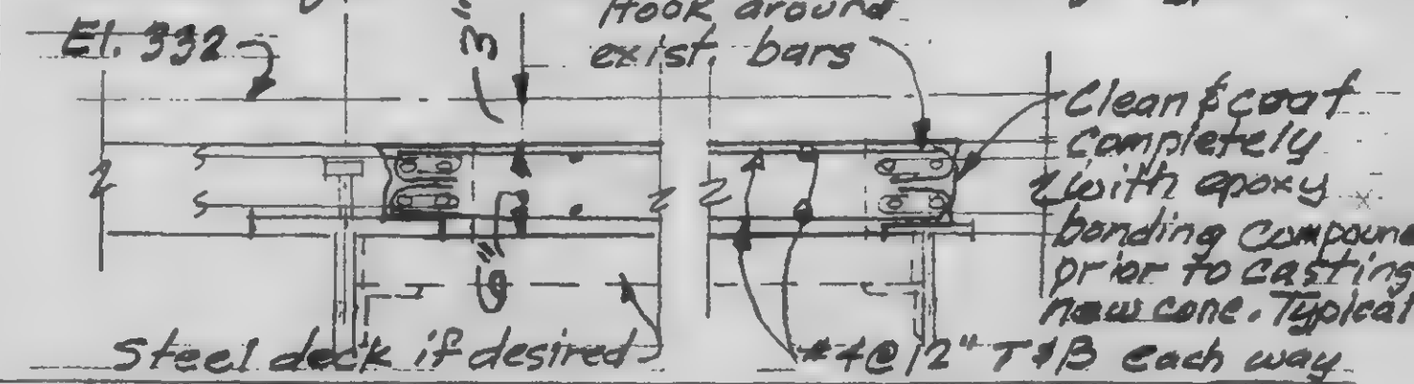

B

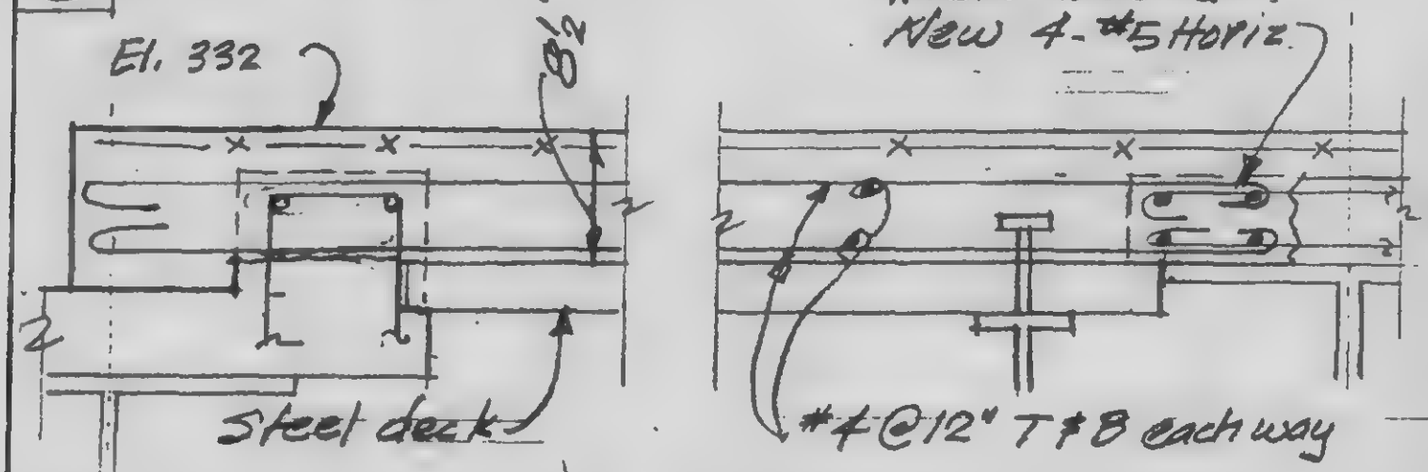

C

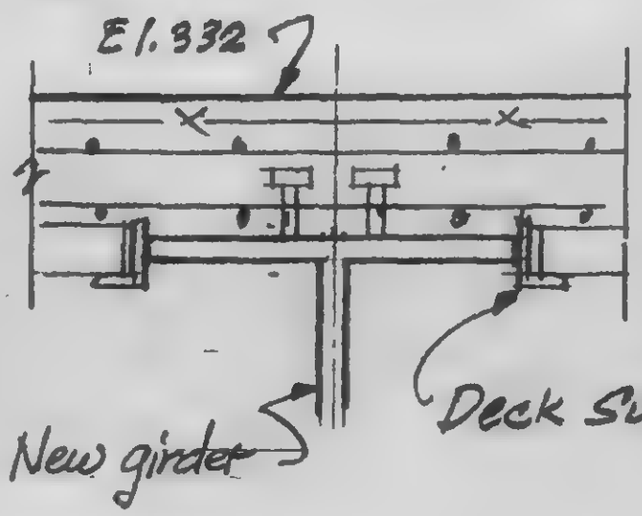

D

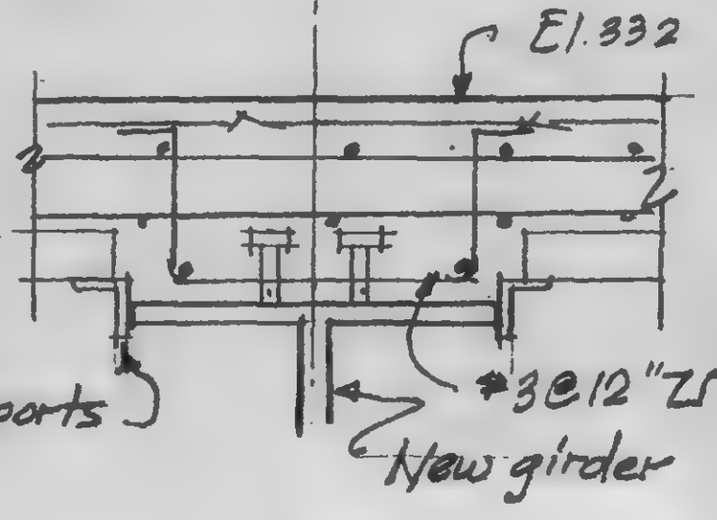

REVISIONS

SKILLING, HELLE, CHRISTIANSEN, ROBERTSON
CONSULTING STRUCTURAL AND CIVIL ENGINEERS

DRAWING NO. 13-K19 15

PROJECT: WTC-1978 HOTEL-SUPPORT REV. | PROJECT NO. 701.283 | BY

DATE: 3-12-79

EL. 294 TRANSFORMER SUPPORTS

VOID

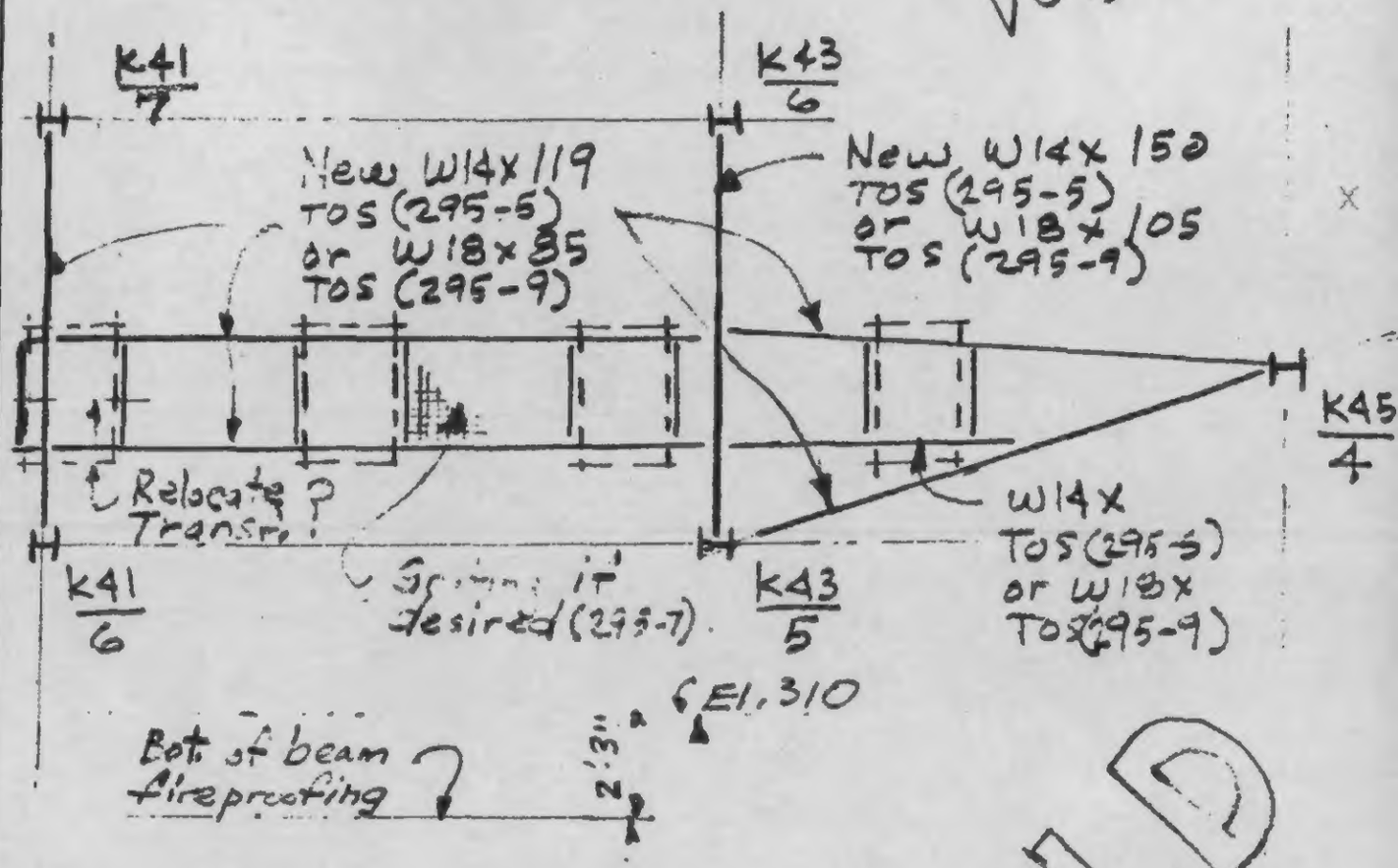

HOLD

REVISIONS

SKILLING, HELLE, CHRISTIANSEN, ROBERTSON
CONSULTING STRUCTURAL AND CIVIL ENGINEERS

DRAWING NO. 13-K19 16

PROJECT: WTC-1978 HOTEL - SUPPORT - REV.

PROJECT NO. 701-283

BY

DATE: 3-12-79

EL. 294 REFRIG. MACHINE SUPPORT

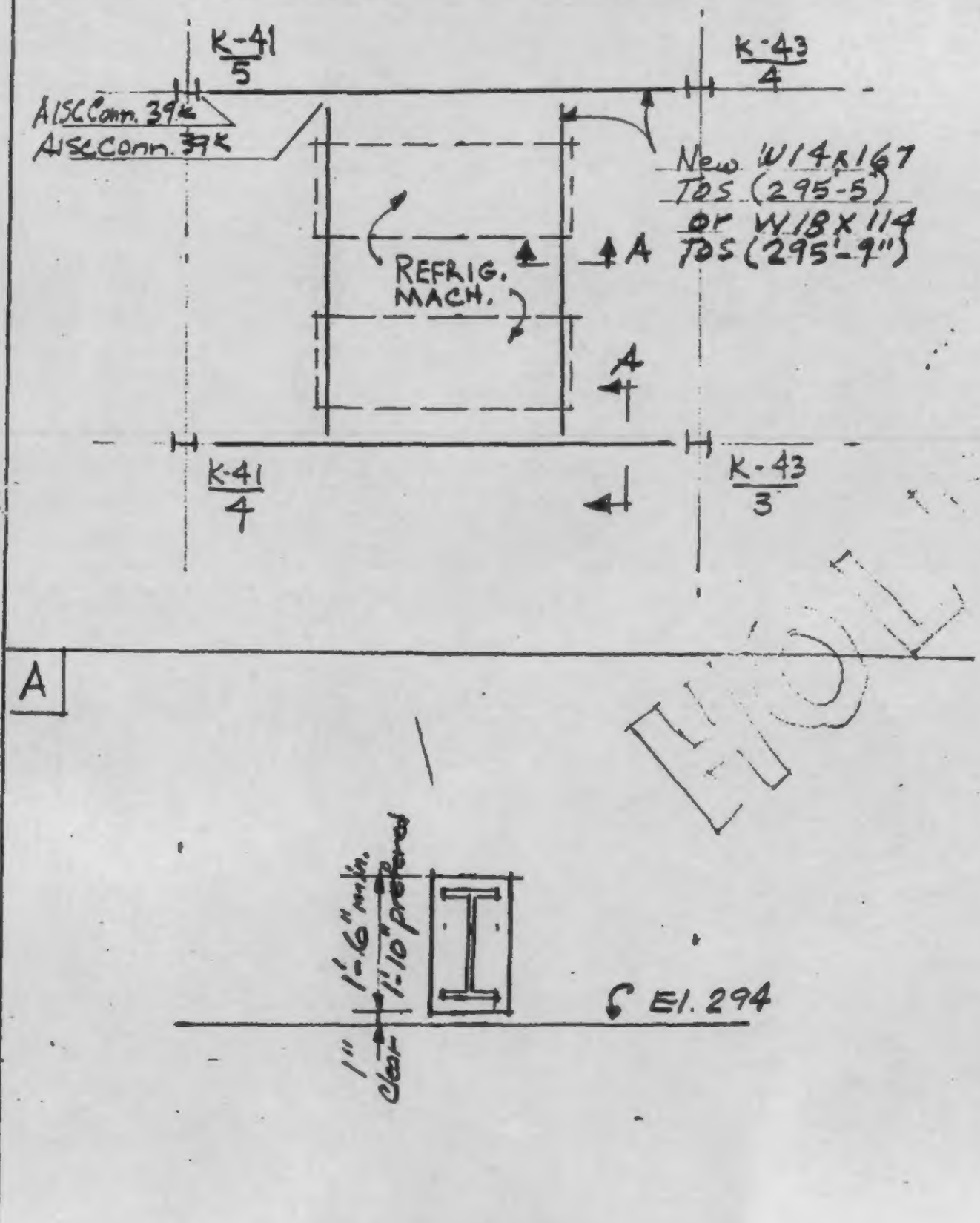

REVISIONS

SKILLING, HELLE, CHRISTIANSEN, ROBERTSON
CONSULTING STRUCTURAL AND CIVIL ENGINEERS

DRAWING NO. 13-K19 21.2

PROJECT WTC-1978 HOTEL-SUPPORT REV. | PROJECT NO. 781-283 | BY WAB | DATE 10/31/79

CON ED-P.C. SPLICE CHAMBER SUPPORT

PLAN

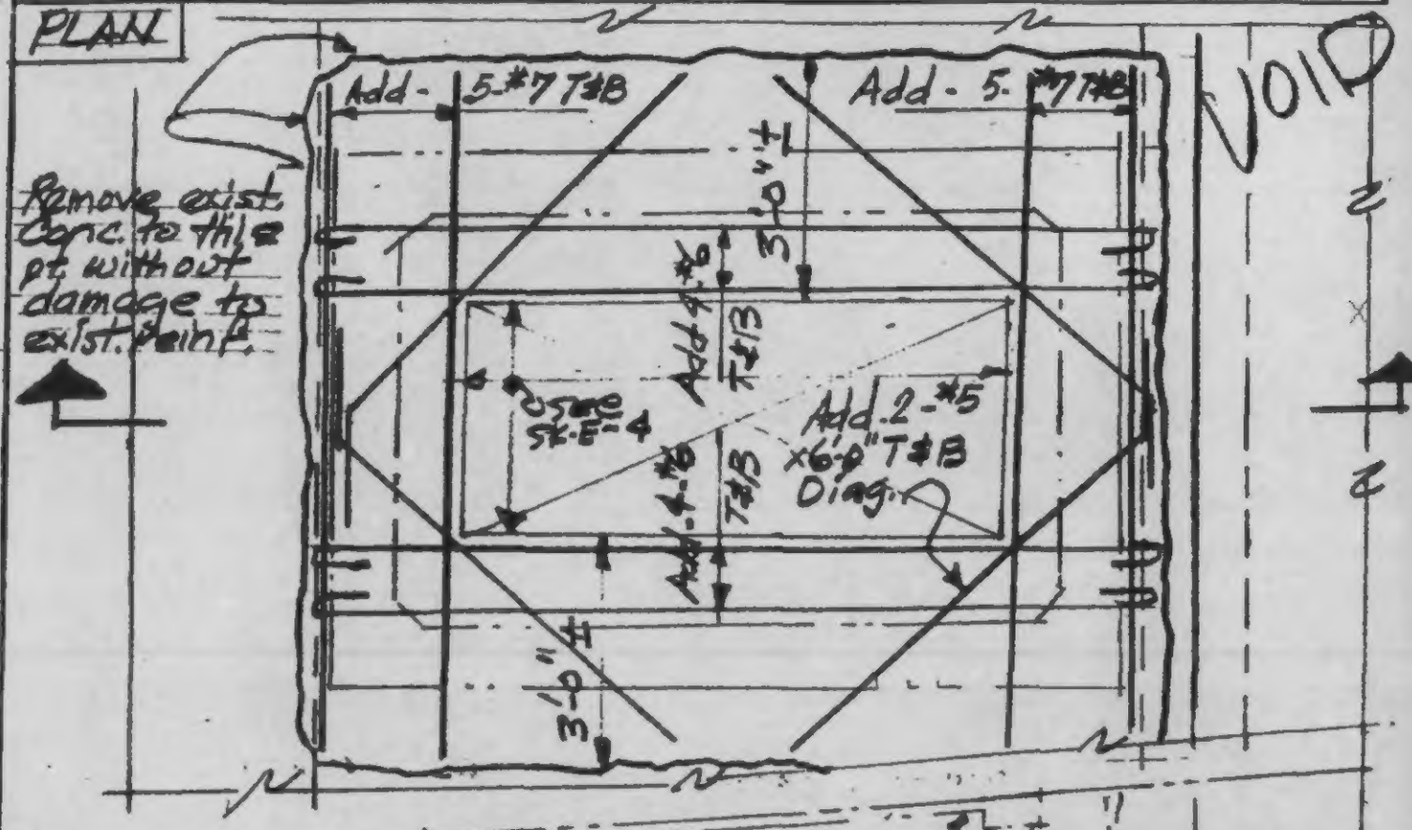

SECTION

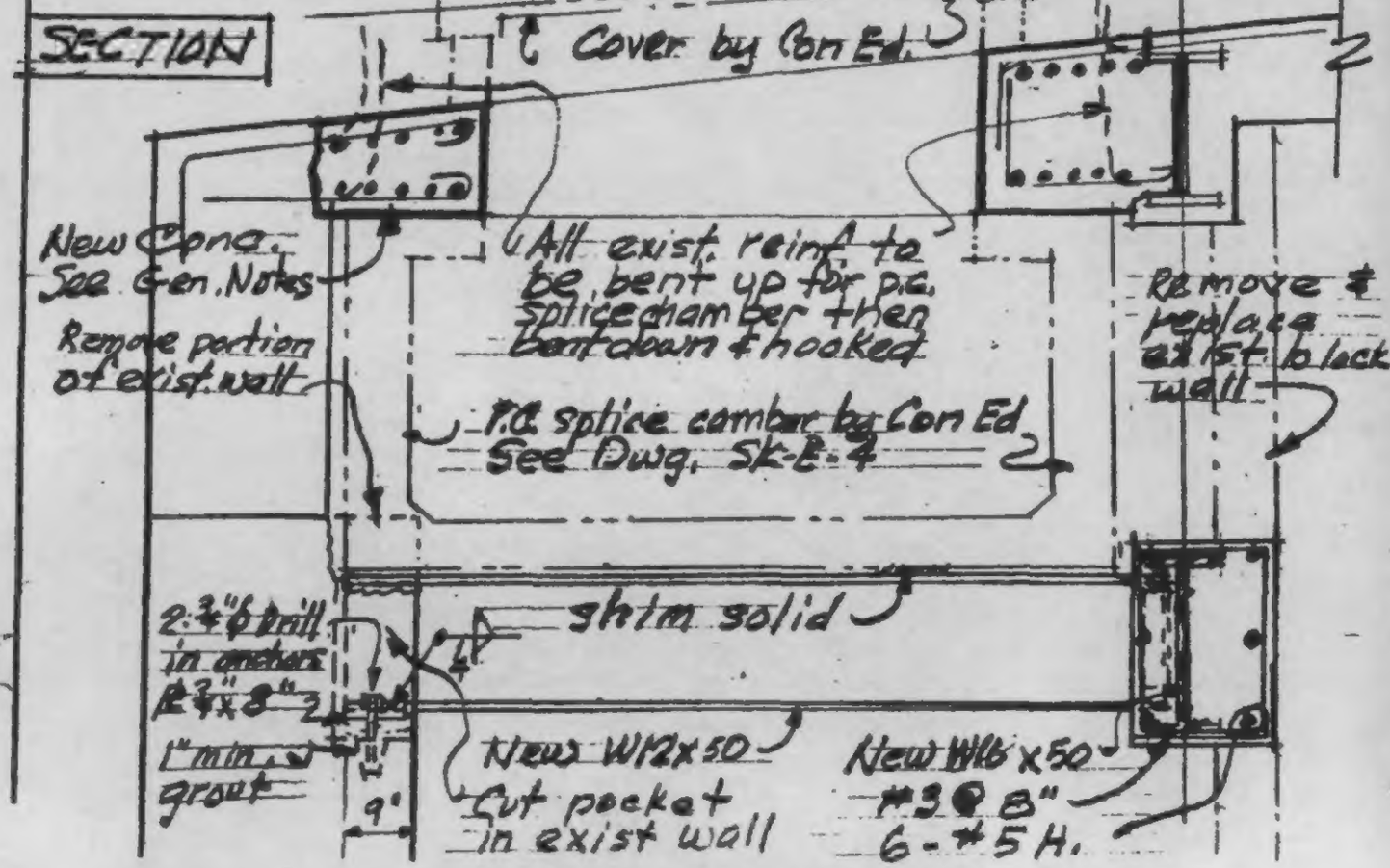

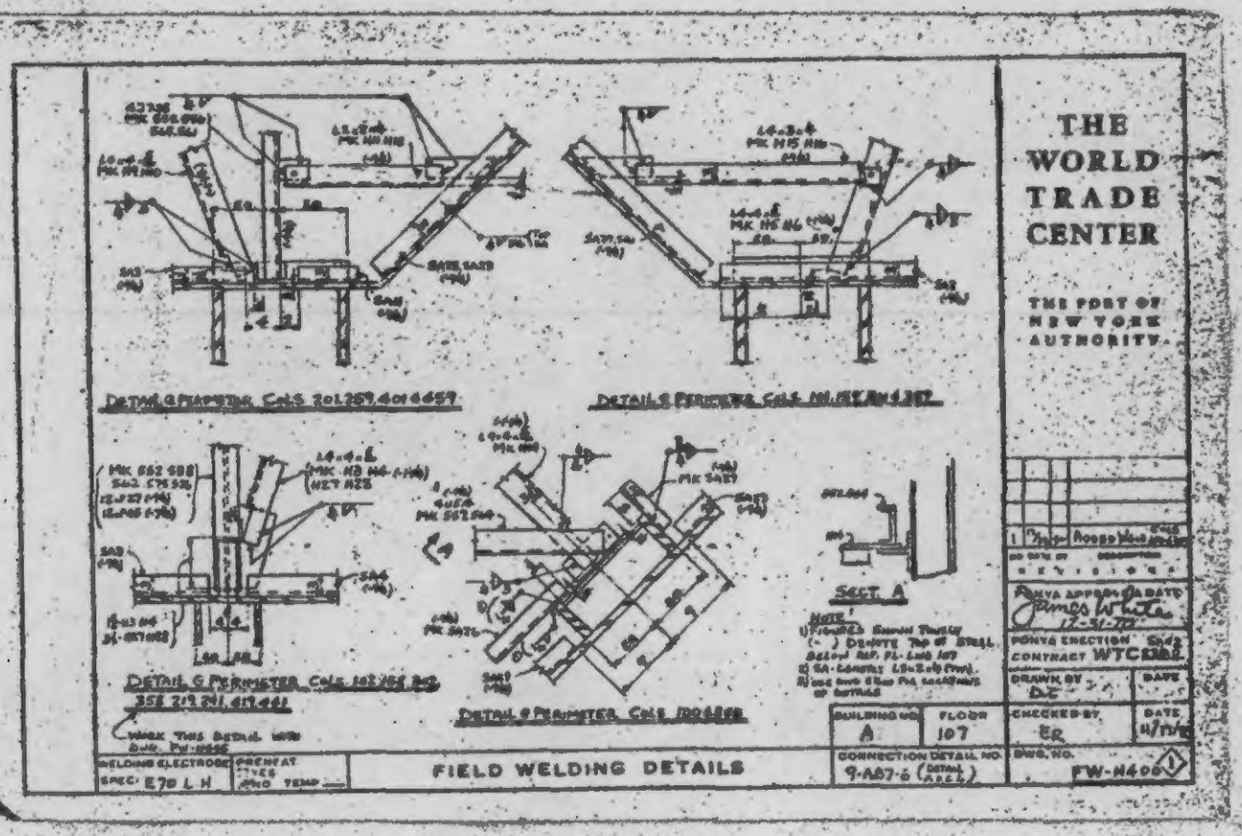
THE WORLD TRADE CENTER
THE PORT OF NEW YORK AUTHORITY
DETAIL G PERIMETER COLS 201,259,401 & 459
DETAIL G PERIMETER COLS 101,155,201 & 357
DETAIL G PERIMETER COLS 102,156,202 358,219,241,419,441
DETAIL G PERIMETER COLS 100 & 358
SECT. A
NOTE:
1) FIGURES SHOWN THUSLY (-) DENOTE TOP OF STEEL BELOW REF. FL. LINE 107
2) SA-CONSTRUCT L5x2x4 (TYP).
3) USE DWG 5 FOR LOCATIONS OF DETAILS
WORK THIS DETAIL WITH DWG. FW-N406
WELDING ELECTRODE SPEC: E70 L H
PREHEAT TYPES PRO TEMP
FIELD WELDING DETAILS
BUILDING NO. A
FLOOR 107
CONNECTION DETAIL NO. 9-A87-6 (DETAIL A & E)
PONYA APPROVED & DATE James White 12-31-77
PONYA ERECTION
CONTRACT WTC
DRAWN BY DC
DATE
CHECKED BY ER
DATE 11/13/
DWG. NO. FW-N406